T. O. 31R2-2TRC24-11
(ARMY) TM 11-687
Basic & Changes No. 1, 2, 3, 4, 5, 6 and 7

AM-2537 pg 14 rear of book
AM 1178 Fig 309
D band 293.1
pg 86
67

RADIO SETS AN/TRC-24, AN/GRC-75, AN/GRC-78, AND AN/GRC-81; RADIO TERMINAL SETS AN/TRC-35, AN/GRC-76, AN/GRC-79, AND AN/GRC-82: RADIO RELAY SET AN/TRC-36; AND RADIO REPEATER SETS AN/GRC-77, AN/GRC-80, AND AN/GRC-83

AF 34 601-67-D-1206
BENDIX FIELD ENGR. CORP.

CHANGE NOTICE

LATEST CHANGED PAGES SUPERSEDE THE SAME PAGES OF PREVIOUS DATE

Insert changed pages into basic publication. Destroy superseded pages.

BASIC AND ALL CHANGES HAVE BEEN MERGED TO MAKE THIS A COMPLETE PUBLICATION.

PUBLISHED UNDER THE AUTHORITY

OF THE SECRETARIES OF THE ARMY AND THE AIR FORCE

AIR FORCE 10/5/72 - 300 REPRINT

Basic - 14 SEPTEMBER 1955
CHANGED 1 FEBRUARY 1967

Technical orders are normally distributed promptly after printing. Date(s) shown on the title page (lower right) are for identification only. This is not a distribution date. Processing time sometimes causes distribution to only appear to have been delayed.

INSERT LATEST CHANGED PAGES. DESTROY SUPERSEDED PAGES.

LIST OF EFFECTIVE PAGES

NOTE: The portion of the text affected by the changes is indicated by a vertical line in the outer margins of the page. Changes to illustrations are indicated by miniature pointing hands. Changes to wiring diagrams are indicated by shaded areas.

TOTAL NUMBER OF PAGES IN THIS PUBLICATION IS 1030 CONSISTING OF THE FOLLOWING:

Page No.	Issue	Page No.	Issue	Page No.	Issue
* Title	1 Feb 67	Figure 270	Original	Blank	Original
* A	1 Feb 67	Blank	Original	Figure 299	Original
1 thru 51	Change 7	Figure 275	Original	Blank	Original
Blank	Change 7	Blank	Original	Figure 302	Original
1 thru 2	Change 6	Figure 276	Original	Blank	Original
1 thru 106	Change 5	Blank	Original	Figure 303	Original
106A thru 106H	Change 5	Figure 279.2	Original	Blank	Original
107	Change 5	Blank	Original	Figure 304	Original
Blank	Change 5	Figure 281	Original	Blank	Original
1 thru 8	Change 4	Blank	Original	Figure 305	Original
1 thru 2	Change 3	Figure 282	Original	Blank	Original
1 thru 4	Change 2	Blank	Original	Figure 306	Original
i	Change 1	Figure 283	Original	Blank	Original
Blank	Change 1	Blank	Original	Figure 307	Original
iii thru xii	Change 1	Figure 284	Original	Blank	Original
1 thru 147	Original	Blank	Original	Figure 308	Original
* 148	1 Feb 67	Figure 285	Original	Blank	Original
149 thru 487	Original	Blank	Original		
Blank	Original	Figure 286	Original		
Figure 30	Original	Blank	Original		
Blank	Original	Figure 287	Original		
Figure 134	Original	Blank	Original		
Blank	Original	Figure 289	Original		
Figure 136	Original	Blank	Original		
Blank	Original	Figure 292	Original		
Figure 144.2	Original	Blank	Original		
Blank	Original	Figure 293	Original		
Figure 174	Original	Blank	Original		
Blank	Original	Figure 295	Original		
Figure 186	Original	Blank	Original		
Blank	Original	Figure 296	Original		
Figure 199	Original	Blank	Original		
Blank	Original	Figure 297	Original		
Figure 268	Original	Blank	Original		
Blank	Original	Figure 298	Original		

Upon receipt of the second and subsequent changes to this technical order, personnel responsible for maintaining this publication in current status will ascertain that all previous changes have been received and incorporated. Action should be taken promptly if the publication is incomplete.

* The asterisk indicates pages changed, added, or deleted by the current change.

ADDITIONAL COPIES OF THIS PUBLICATION MAY BE OBTAINED BY USAF ACTIVITIES IN ACCORDANCE WITH T.O. 00-5-2.

USAF

TM 11-687/TO 31R2-2TRC24-11

TECHNICAL MANUAL
No. 11-687
TECHNICAL ORDER
No. 31R2-2TRC24-11

DEPARTMENTS OF THE ARMY AND
THE AIR FORCE

Washington 25, D. C., *14 September 1955*

RADIO SET AN/TRC-24, RADIO TERMINAL SET AN/TRC-35, RADIO RELAY SET AN/TRC-36

			Paragraphs	*Page*
CHAPTER	1.	INTRODUCTION		
Section	I.	General	1,2	3
	II.	Description and data	3–30	3
CHAPTER	2.	INSTALLATION		
Section	I.	System planning considerations	31–61	43
	II.	Service upon receipt of radio sets	62–79	87
CHAPTER	3.	OPERATION		
Section	I.	Controls and instruments	80–90	112
	II.	Operation under usual conditions	91–124	129
	III.	Operation under unusual conditions	125–130	150
CHAPTER	4.	ORGANIZATIONAL MAINTENANCE		
Section	I.	Tools and equipment	131–133	153
	II.	Preventive maintenance services	134–138	154
	III.	Lubrication and weatherproofing	139–144	158
	IV.	General troubleshooting procedures	145–174	174
	V.	Troubleshooting at organizational maintenance level	175–179	190
CHAPTER	5.	AUXILIARY EQUIPMENT	180–182	203
CHAPTER	6.	THEORY		
Section	I.	Theory of carrier system	183–186	204
	II.	Theory of transmitter circuits	187–254	208
	III.	Theory of receiver circuits	255–299	274
	IV.	Theory of order-wire and signaling circuits	300–308	300
CHAPTER	7.	FIELD MAINTENANCE		
Section	I.	Troubleshooting at field maintenance level	309–333	310
	II.	Repairs	334–341	391
	III.	Final tests and alinement of plug-in and minor components assemblies	342–356	403
	IV.	Final test of Radio Receiver R-417/TRC	357–367	431
	V.	Final test of Transmitter and Power Supply PP-685/TRC	368–378	446
CHAPTER	8.	SHIPMENT AND LIMITED STORAGE AND DEMOLITION TO PREVENT ENEMY USE		
Section	I.	Shipment and limited storage	379–383	454
	II.	Demolition of materiel to prevent enemy use	384, 385	455
INDEX				474

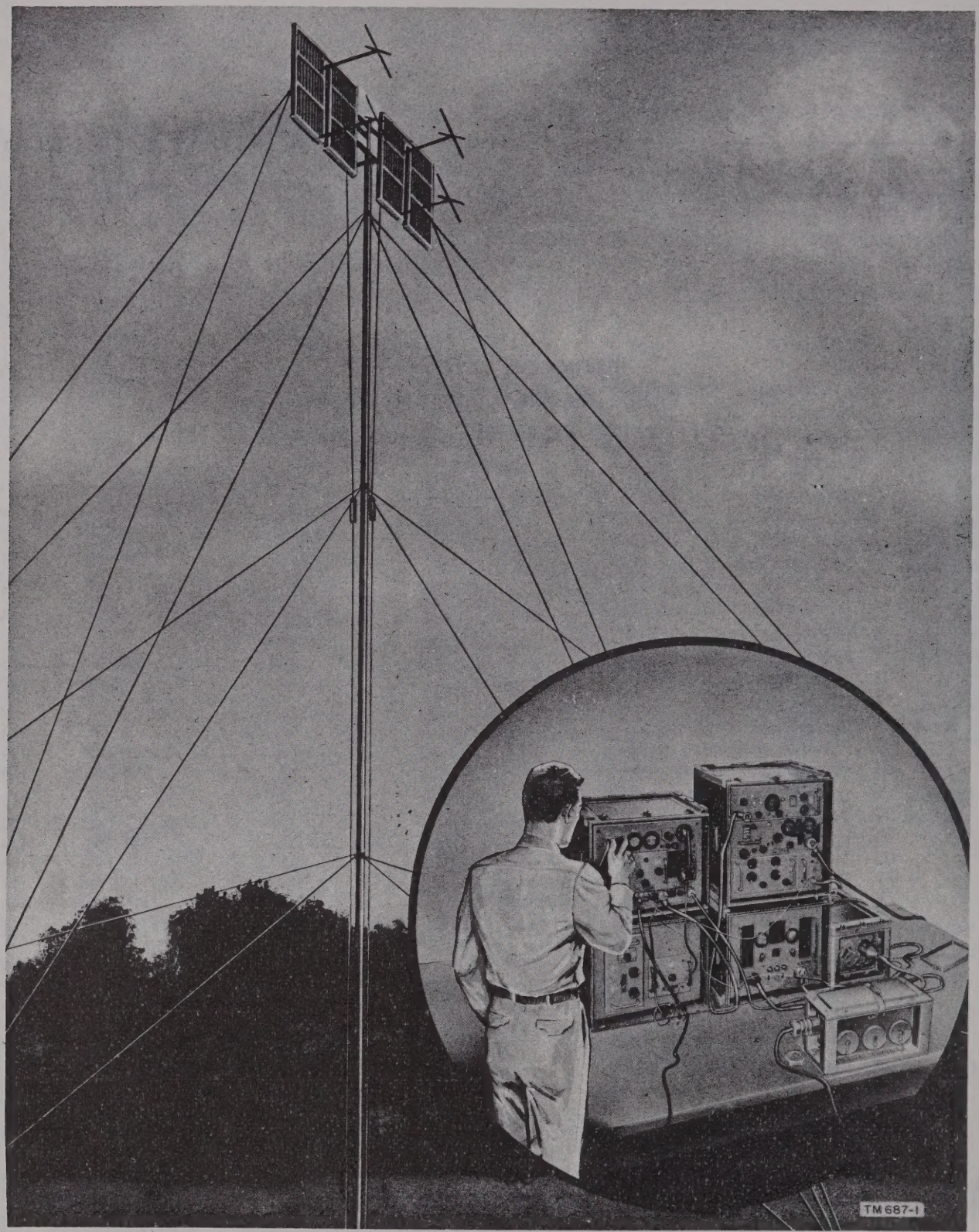

Figure 1. Radio Set AN/TRC–24 in use.

CHAPTER 1

INTRODUCTION

Section I. GENERAL

1. Scope

a. This manual contains theory and trouble-shooting information, and the necessary instructions for the installation, operation, maintenance, and repair of Radio Set AN/TRC–24 (fig. 1). Also contained in this manual are instructions for the use of Radio Set AN/TRC–24 when it is part of Radio Terminal Set AN/TRC–35 and Radio Relay Set AN/TRC–36. The application of these radio sets in multichannel carrier-telephone systems using Telephone Terminal AN/TCC–3 or Telephone Terminal AN/TCC–7 and associated telephone equipment is included in this manual.

b. Forward comments on this publication direct to Commanding Officer, The Signal Corps Publications Agency, Fort Monmouth, N. J. Attn: Standards Division.

2. Forms and Records

The following forms will be used for reporting unsatisfactory conditions of Army materiel and equipment and when performing preventive maintenance:

a. DD Form 6, Report of Damaged or Improper Shipment, will be filled out and forwarded as prescribed in SR 745–45–5 (Army); Navy Shipping Guide, Article 1850–4 (Navy); and AFR 71–4 (Air Force).

b. DA Form 468, Unsatisfactory Equipment Report, will be filled out and forwarded to the Office of the Chief Signal Officer as prescribed in SR 700–45–5.

c. DD Form 535, Unsatisfactory Report, will be filled out and forwarded to Commanding General, Air Materiel Command, Wright-Patterson Air Force Base, Dayton, Ohio, as prescribed in SR 700–45–5 and AF TO 00–35D–54.

d. DA Form 11–238, Operator First Echelon Maintenance Check List for Signal Corps Equipment (Radio Communication, Direction Finding, Carrier, Radar), will be prepared in accordance with instructions on the back of the form (fig. 97).

e. DA Form 11–239, Second and Third Echelon Maintenance Check List for Signal Corps Equipment (Radio Communication, Direction Finding, Carrier, Radar), will be prepared in accordance with instructions on the back of the form (fig. 98).

f. Use other forms and records as authorized.

Section II. DESCRIPTION AND DATA

3. Purpose and Use

a. Radio Set AN/TRC–24 provides frequency-modulated (fm) radio facilities in the frequency range from 50 to 600 megacycles (mc) over an unobstructed line-of-sight path. At present only the range from 100 to 400 mc is available for use. The set transmits base-band signals in the frequency range from 250 to 68,000 cycles per second (cps). In general, the radio sets are used as radio connecting links in parts of multichannel telephone circuits where the laying of telephone cable is not practicable.

b. Radio Set AN/TRC–24 comprises a radio-terminal set exclusive of operating spares. Radio Terminal Set AN/TRC–35 designates

the components that comprise a radio-terminal set including operating spares. Radio Relay Set AN/TRC–36 designates the components that comprise a radio-relay set. A list of the major groups of equipment used in each set is given in paragraph 7*b*. All operating, maintenance, and repair procedures in this technical manual pertaining to the components of Radio Set AN/TRC–24 also pertain to the same components in Radio Terminal Set AN/TRC–35 and Radio Relay Set AN/TRC–36.

c. This radio set is intended for use with installations in conjunction with Telephone Terminal AN/TCC–3 or AN/TCC–7 to provide up to 12 one-way voice-frequency (vf) channels.

4. System Applications

a. General.

(1) A radio system consists of two radio terminals and as many radio-relay sets as are needed to establish communications between two terminals. Radio Set AN/TRC–24 or Radio Terminal Set AN/TRC–35 can be used as the terminals in a radio system. One or more Radio Relay Sets AN/TRC–36 may be used in a radio-relay system.

(2) Radio systems using Radio Set AN/TRC–24, Radio Terminal Set AN/TRC–35, and Radio Relay Set AN/TRC–36 are used only as part of a telephone system operating in the base-band frequency range from 250 to 68,000 cps. Normally these sets are used in radio systems that are part of either a 4-channel (Telephone Terminal AN/TCC–3) or a 12-channel (Telephone Terminal AN/TCC – 7) telephone system.

(3) If the distance to be spanned by the radio system is less than 30 miles, normally only two radio terminals are required. If the distance to be covered by the radio system is greater than 30 miles, Radio Relay Set AN/TRC–36 is located at intervals up to 30 miles within the span. One radio-terminal set is located at each end of the radio system and connected to the telephone equipment. A block diagram of a radio system consisting of two radio terminals in an associated telephone system is shown in figure 2. A block diagram of a radio system consisting of two radio terminals, one radio-relay set, and an associated telephone system is shown in figure 3.

b. Radio System Used as Part of AN/TCC–3 or AN/TCC–7 Telephone System. Topographical features of the land may make it advantageous to use a radio-system link in an AN/TCC–3 or AN/TCC–7 telephone system. The radio-system link normally is used to replace wire in a part of a telephone system where the laying of cable is not practicable.

(1) Two Telephone Terminals AN/TCC–7, one or more attended Telephone Repeaters AN/TCC–8, and an unattended Telephone Repeater AN/TCC–11 form a typical AN/TCC–7 telephone system (fig. 2). The radio-system link replacing part of the wire link in this telephone system may consist of two Radio Terminal Sets AN/TRC–35. Each terminal of the radio system can be connected to either a telephone terminal or to an attended telephone repeater. The radio system should never be connected directly to an unattended telephone repeater, because 600 volts may be present across the cable pairs. The radio-system link provides simultaneous transmission of the signals originating at the two telephone terminals. A voice-frequency circuit is available for use between attendants at the radio sets and telephone equipment by use of an order wire.

(2) Shown in figure 3 is a typical AN/TCC–3 telephone system consisting of a Telephone Terminal AN/TCC–3 at both ends and an intervening Telephone Repeater AN/TCC–5. The radio-system link, which replaces part of the wire link in this telephone system, can consist of two Radio Terminal Sets AN/TRC–35 and one Radio Relay Set AN/TRC–36. Each terminal of the radio system can be connected to either a telephone terminal or to a telephone repeater. The radio-system link provides simultaneous transmission in both directions of the signals originating at the two tele-

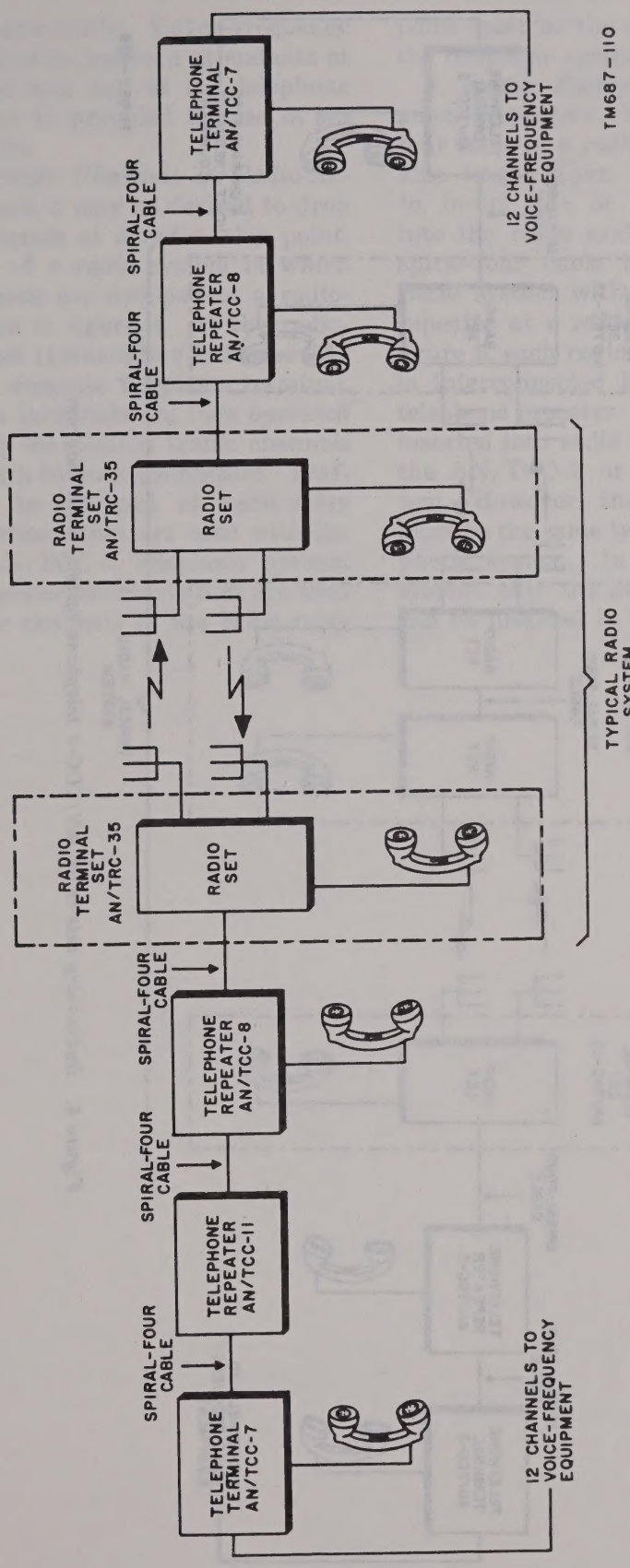

Figure 2. Radio-terminal sets in an AN/TCC-7 telephone system, block diagram.

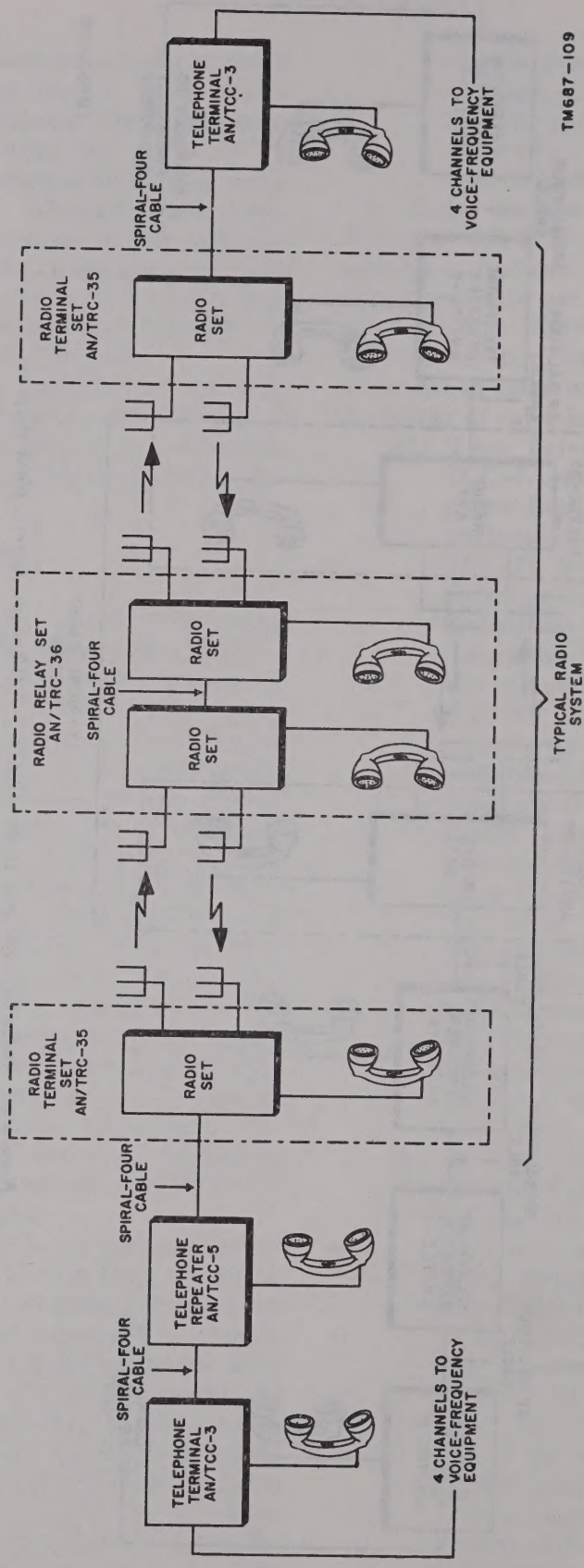

Figure 3. Radio-relay sets in an AN/TCC-3 telephone system, block diagram.

phone terminals. Voice-frequency communication between attendants at the radio sets and at the telephone equipment is provided by use of an order wire.

c. Dropping Traffic Channels at Radio-Relay Points. At times it may be desired to drop certain traffic channels at a radio-relay point. A block diagram of a radio system in which some traffic channels are dropped at a radio-relay site is shown in figure 4. At the radio-relay, each radio set (transmitter and receiver) is connected to a separate telephone terminal. The two telephone terminals are then operated back to back with the desired traffic channels dropped at the back-to-back connection. Traffic channels can be dropped at radio-relay points in radio systems that are used with the AN/TCC–3 or AN/TCC–7 telephone system. However, the telephone terminals that are used to drop the traffic channels at the radio-relay point must be the same type as those used in the telephone system.

d. Radio System With Intervening Telephone Repeaters. Where the length of spiral-four cable in a radio system exceeds the allowable length (par. 59), it may be necessary to insert one or more telephone repeaters into the radio system to compensate for the spiral-four cable losses. Figure 5 shows a radio system with one intervening telephone repeater at a radio-relay point. As shown in figure 5, each radio set at the radio-relay point is interconnected by spiral-four cable to the telephone repeater. Telephone repeaters can be inserted into radio systems that are used with the AN/TCC–3 or AN/TCC–7 telephone system. However, the telephone repeaters used must be the same type as those used in the telephone system. In an AN/TCC–7 telephone system, only the attended telephone repeaters can be inserted in the radio system.

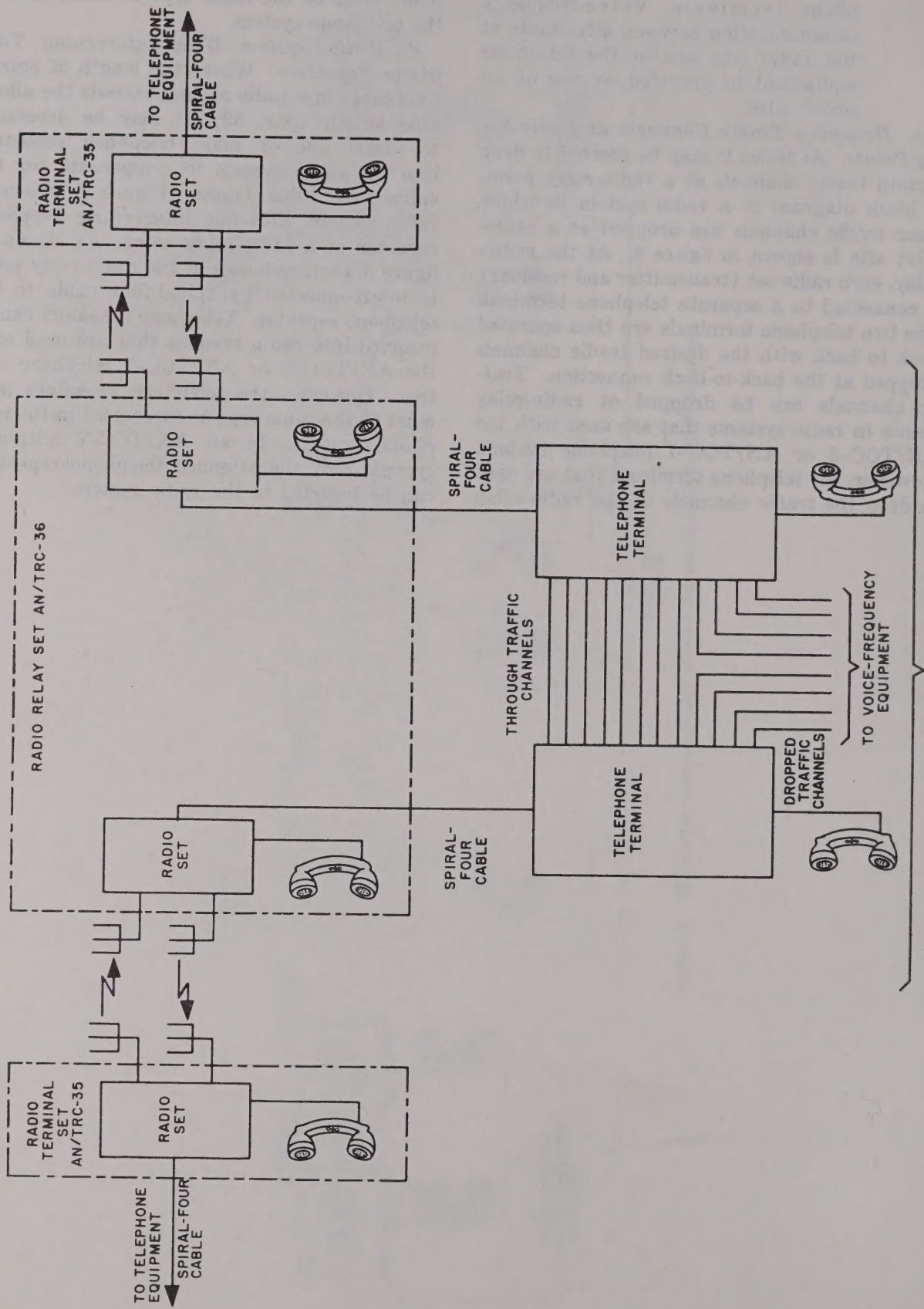

Figure 4. Radio system, dropping channels at radio-relay point, block diagram.

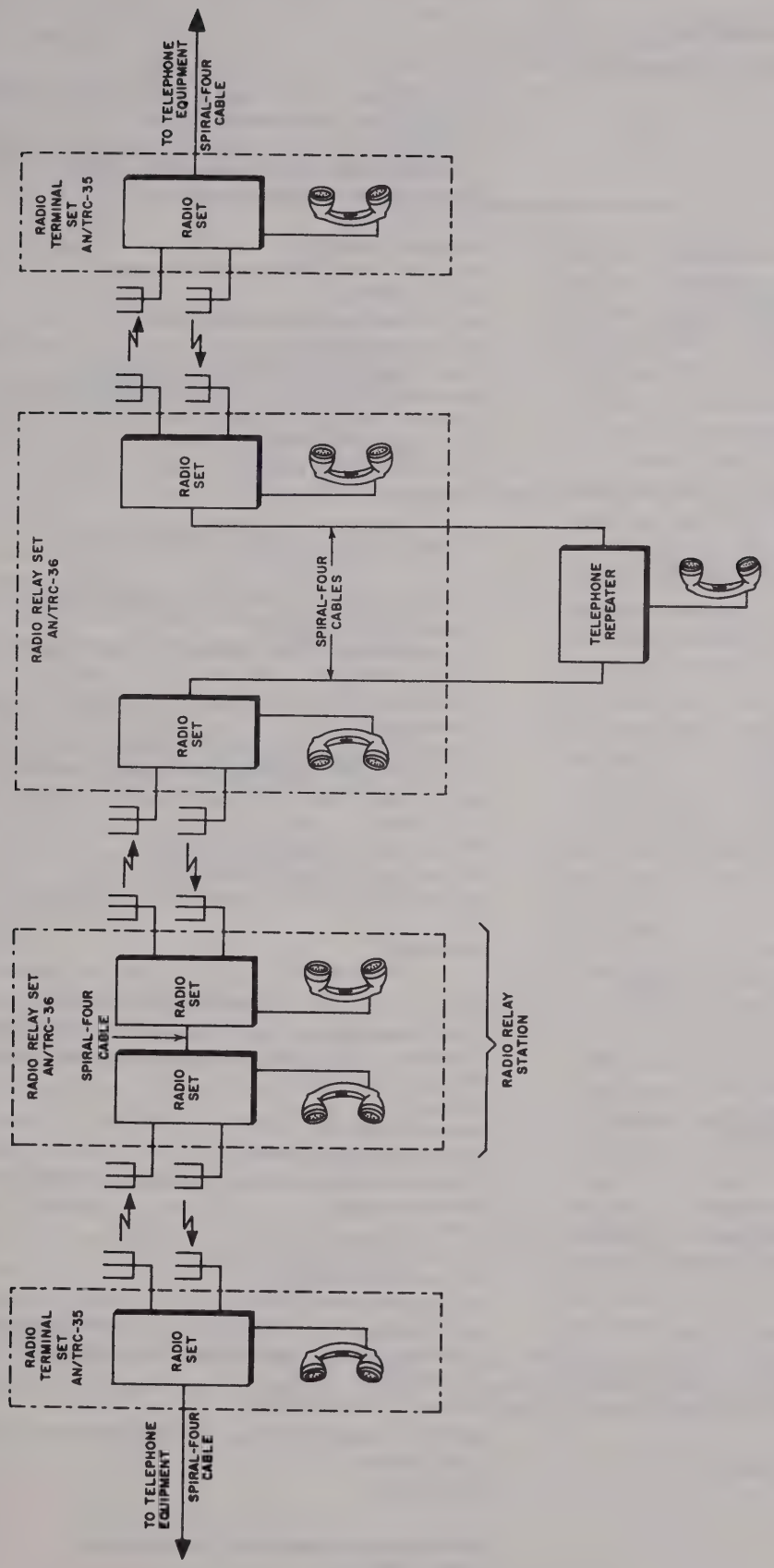

Figure 5. Block diagram of radio system with an attended telephone repeater at radio-relay point.

5. Technical Characteristics

a. Radio Transmitter T–302/TRC.

Frequency range	100 to 225 mc in 250 discrete rf channels with Radio Frequency Amplifier AM–912/TRC (band B).
	225 to 400 mc in 175 discrete rf channels with Radio Frequency Amplifier-Multiplier AM–915/TRC (band C).
Transmitter type	Reactance tube modulated oscillator.
Power output	50 to 120 watts.
Type of modulation	Frequency modulation.
Type of transmission	Voice and multichannel carrier telephone.
Base-band frequency range	250 to 68,000 cps.
Input impedance (cable connections)	600 or 135 ohms (balanced to ground).
Output impedance (rf)	52 ohms (nominal).
Operating range	Approximately 25 to 30 miles (line of sight).
Frequency control	Automatic frequency control of electronic oscillator. Crystal-controlled reference frequency generator for afc system.
Number of tubes	26 (with AM–912/TRC).
	27 (with AM–915/TRC).
Weight (in transit case with rf tuner and band-pass filter).	118 pounds.
Power input	Obtained from Power Supply PP–685/TRC.

b. Power Supply PP–685/TRC.

Power input	115 volts, 50 to 60 cycles, approximately 875 volt-amperes at 95% power factor (par. 28).
Power output (dc)	+150 volts dc, 275 ma. regulated (for plates and screen grids, except as noted below).
	+250 volts dc, 10 ma, unregulated (for cathode follower and low-power alarm).
	+200 to +350 volts dc, 35 ma, regulated (for rf tuner screen grids).
	−12 volts dc, 75 ma, unregulated (for receiver bias).
	300 to 900 volts dc, 500 ma, unregulated (for plates of driver and rf tuners).
Power output (ac)	2.5 volts ac, 6.25 amp (for filaments).
	6.3 volts ac, 12.0 amp (for filaments).
	115 volts ac, 2 amp (for transmitter blower motor).
Number of tubes	10.
Weight with transit case	115 pounds.

c. Radio Receiver R–417/TRC.

Receiver type	Single-conversion superheterodyne.
Frequency range	Continuous 100 to 225 mc (with Amplifier-Converter AM–913/TRC).
	Continuous 225 to 400 mc (with Amplifier-Converter AM–914/TRC).
Type of modulation received	Frequency modulation.
Intermediate frequency	30 mc.
Base-band frequency range	250 to 68,000 cps.
Frequency control	Automatic frequency control.
Gain control	Automatic gain control and manual gain control.
Input impedance (rf terminals)	52 ohms nominal.
Frequency of order-wire signaling circuit	1,600 cps.
Output impedance (spiral-four cable terminals)	600 or 135 ohms (balanced to ground).
Number of tubes	30 (with AM–913/TRC).
	33 (with AM–914/TRC).
Power supply	Self-contained, except for negative bias from transmitter.
Power input	115 volts, 50 to 60 cps, single-phase ac, 185 watts (par. 28).
Weight (in transit case with tuner and dummy filter)	96 pounds.

d. Autotransformer Fixed Power Transformer TF–167/TRC.

Input voltage	95 to 130 volts, 50 to 60 cps or 190 to 260 volts, 50 to 60 cps.
Output voltage with 16-ampere load	115 ±5 volts.
Weight	41 pounds.

e. Antenna.

Type	Two half-wave dipoles with plane reflector.
Operating frequency	100 to 400 mc.

Polarization	Horizontal or vertical.
Antenna beam width	30° to 90° depending on frequency.
Gain	5 to 9 db depending on frequency.
Major to minor lobe ratio	Greater than 8 db.
Weight	143 pounds.
Type of mast	Tubular steel.
Maximum height of mast	45 feet.
Number of sections	9.

6. Packaging Data

a. General. The contents of all packages are stenciled directly on the box. A packing slip is stapled to the side of the box and protected by a waterproof envelope. An orange band is painted around the box to indicate that it is packed for export shipment. Export packaging is labeled PACKAGED WITH A DEHYDRATING AGENT, DO NOT OPEN UNTIL READY FOR USE. An orange spot on the box means that the box is part of a group shipment; each box is designated by a device, such as 1/2 or 2/2. This means that box 1/2 is a box in a shipment of two; box 2/2 is the other box in the shipment, and so on. Items may be packaged in a manner different from that shown in figures 66 and 67, depending on the supply channel. In general, some of the smaller parts, such as tubes, fuses, tools, and test equipment are packaged with larger components. The smaller components, not packaged as indicated above, are individually wrapped to afford protection during shipment.

b. Packaging.

(1) *Domestic, immediate use.* Components of each major group (par. 7) are preserved and packaged to protect them against deterioration and damage during shipment.

(2) *Domestic, limited storage.* Components of each set are preserved and adequately cushioned to protect them from damage in transit and storage.

(3) *Military, overseas.* Fragile components (par. 7*b*) are packaged as shown in figure 66. Radio Receiver R–417/TRC, for example, is packaged as follows: The receiver is adequately cushioned by corrugated fillers. A desiccant is used for protection against moisture. The receiver, together with fillers and desiccant, is then placed within an inner corrugated carton. The carton is covered material. An outer corrugated carton is used as an added protection; it is heat-sealed with moistureproof barrier material. Unbreakable items, such with a moisture-vaporproof barrier as Antenna Reflector Supports AB–325/TRC, are stored within their carrying cases, then placed within a wooden packing case. The inside of the wooden case is reinforced by wood positioning cleats, which also cushion the case and prevent damage due to movement during shipment. Normally, Radio Set AN/TRC–24 is packaged for export shipment. Packaging for Radio Terminal Set AN/TRC–35 and Radio Relay Set AN/TRC–36 is the same as for Radio Set AN/TRC–24.

c. Packing.

(1) *Domestic shipment, immediate use.* The radio set is packed in shipping containers in accordance with the best practices.

(2) *Domestic shipment, limited storage.* The radio set is packed in wood-cleated plywood or nailed wooden boxes.

(3) *Military oversea shipment.* The radio set is packed in wood-cleated plywood or nailed wooden boxes that are reinforced with flat steel strapping.

d. Packaging Data Chart. The following chart includes data for packing the radio set:

Crate No.	Number of crates			Dimensions of crates				
	Radio Set AN/TRC-24	Radio Terminal Set AN/TRC-35	Radio Relay Set AN/TRC-36	Length (in.)	Width (in.)	Depth (in.)	Volume (cu ft)	Unit weight (lb)
1	1	2	3	27 3/8	26	24 1/2	10	185
2	1	2	3	26	22 1/4	24 1/2	8.2	174
3	1	2	3	26	22 1/4	24 1/2	8.2	174
4	1	2	3	26	22 1/4	24 1/2	8.2	174
5	1	2	3	18 1/4	16 3/8	16 1/8	2.8	85
6	1	2	3	27 3/8	26	24 1/2	10	178
7	1	1	2	26	17 5/8	24 1/2	6.5	150
8	1	1	2	26	17 5/8	24 1/2	6.5	150
9	1	1	2	33 3/8	21 3/8	13 7/8	5.7	101
10	1	1	2	29 3/8	25 7/8	13 7/8	6	110
11	1	1	2	55 1/4	37 1/4	16 1/4	19.3	210
12	1	1	2	37 1/4	33 1/4	10 3/4	7.7	95
13	1	1	2	26 1/4	26 1/4	14 3/8	5.7	112
14	1	1	2	23 1/2	21 1/8	14 7/8	4.3	77
15	1	1	2	69 3/8	19 3/8	12 5/8	9.8	210
16	1	1	2	49 3/4	20 3/4	6	3.6	98
17	1	1	1	30 1/4	30 1/4	14 1/4	7.6	100
18	1	1	1	27 3/8	26	24 1/2	10	178

7. Components

a. General.

(1) The various components comprising Radio Set AN/TRC–24 have been separated into seven major nomenclatured groups. These nomenclatured groups, the crates included in each group, and the required quantities of each group are listed in *b* below.

(2) Also listed in the table in *b* below are the various groups comprising Radio Terminal Set AN/TRC–35 and Radio Relay Set AN/TRC–36. Each radio set consists of the same components except in quantity.

Note. Check the pertinent procurement parts lists and packaging lists for the correct quantity for each unit. The parts issued for typical sets are listed in *c* and *d* below.

b. Table of Major Groups.

Major group	Crates included in group	Quantity required		
		Radio Set AN/TRC-24	Radio Terminal AN/TRC-35	Radio Relay Set AN/TRC-36
Radio Set Group OA–483/TRC	1 through 6	1	2 (one in use, one spare).	3 (two in use, one spare).
Filter Kit MK–123/TRC	7	1	1	2.
Filter Kit MK–124/TRC	8	1	1	2.
Antenna Group OA–482/TRC	9 through 13	1	1	2.
Mast AB–235/G	14 through 16	1	1	2.
Power Accessories Kit MK–122/TRC	17 and 18	1	1	1.
Supplementary accessories group*		1	1	1.

*The supplementary accessories group consists of the power units, blitz cans, spouts, and ground rods.

c. Table of Components. The following table indicates the contents of each crate. Check the packing list of each crate for exact components.

Crate No.	Contents	
	Quantity	Item
1	1	Transmitter Case CY–1341/TRC.
	1	Radio Transmitter T–302/TRC.
	1	Dummy filter.
	1	Radio Frequency Amplifier-Multiplier AM–915/TRC.
	1	Tube puller.
2	1	Receiver Case CY–1339/TRC.
	1	Radio Receiver R–417/TRC.
	1	Dummy filter.
	1	Adapter.
	1	I-f alinement tool.
	1	Wrench, hexagonal, #6.
	1	Wrench, hexagonal, #8.
	1	Wrench, hexagonal, #10.
	1	Amplifier-Converter AM–914/TRC.
3	1	Power Supply Case CY–1340/TRC.
	1	Power Supply PP–685/TRC.
	1	Adapter.
4	1	Electrical Standardized Components Case CY–1338/TRC.
	1	Radio Frequency Amplifier AM–912/TRC.
	1	Amplifier-Converter AM–913/TRC.
5	1	Autotransformer Fixed Power Transformer TF–167/TRC.
6	1	Accessory Kit MK–133/TRC including:
	1	Accessories Case CY–1342/TRC.
	1	Radio Frequency Cable Assembly CG–1091/U.
	2	Radio Frequency Cable Assembly CG–789A/U (2 ft 6 in.).
	1	Radio Frequency Cable Assembly CG–1031/U.
	1	Radio Frequency Cable Assembly CG–1103/U.
	1	Telephone Cable Assembly CX–1512/U (12 ft).
	1	Electrical Special Purpose Cable Assembly CX–2252/U (6 ft).
	1	Electrical Special Purpose Cable Assembly CX–2253/U (4 ft 2 in.).
	1	Electrical Power Cable Assembly CX–2256/U (8 ft).
	1	Electrical Power Cable Assembly CX–2257/U (10 ft.)
	1	Electrical Power Cable Assembly CX–2258/U (8 ft).
	2	Electrical Special Purpose Cable Assembly CX–2406/U (2 ft 6 in.).
	1	Electrical Special Purpose Cable Assembly CX–2420/U (3 ft).
	1	Electrical Special Purpose Cable Assembly CX–2473/U (2 ft 6 in.).
	6	Fuses, ½ amp.
	6	Fuses, ½ amp.
	12	Fuses, 1 amp.
	6	Fuses, 1½ amp.
	6	Fuses, 3 amp.
	6	Fuses, 5 amp.
	6	Fuses, 10 amp.
	12	Fuses, 20 amp.
	1	Resistor, 130 ohms, 2 watts.
	1	Capacitor, .1 micron, 200 v.
	1	Handset H–90/U.
	1	Screwdriver TL–458/U.
	2	TM 11–687.
	1	Book of circuit labels for transmitter r-f tuners, and power supply.
	1	Book of circuit labels for receiver and receiver r-f tuners.
	1	Crystal rectifier, type 1N21B.
	1	Crystal rectifier, type 1N69.
	1	Electron tube, type 0A3.
	2	Electron tubes, type 5R4WGY.
	2	Electron tubes, type 6AN5.
	1	Electron tube, type 5725/6AS6W.
	1	Electron tube, type 6AV6.
	5	Electron tubes, type 6J4.
	3	Electron tubes, type 4X150A.
	2	Electron tubes, type 4X150G.
	1	Electron tube, type 836.
	6	Electron tubes, type 5654/6AK5W.
	6	Electron tubes, type 5670
	1	Electron tube, type 5879.
	1	Electron tube, type 5726/6AL5W.
	2	Electron tubes, type 5751.
	1	Electron tube, type 5933.
	4	Electron tubes, type 5998.
	4	Electron tubes, type 6CB6.
	1	Trouble lamp 50 w, 115 v, 25-ft extension cord.
	1	Incandescent lamp, 50 w, 120 v, inside frosted, screw base.
	3	Incandescent lamps, 1.2 w, 6–8 v, clear, miniature bayonet socket.
7	1	Accessories Case CY–1344/TRC:

Crate No.	Quantity	Contents: Item
	1	Band Pass Filter F–192/U.
	1	Band Pass Filter F–193/U.
	1	Band Pass Filter F–194/U.
	1	Band Pass Filter F–195/U.
	1	Band Pass Filter F–196/U.
	1	Band Pass Filter F–197/U.
8	1	Accessories Case CY–1344/TRC:
	1	Band Pass Filter F–199/U.
	1	Band Pass Filter F–200/U.
	1	Band Pass Filter F–201/U.
	1	Band Pass Filter F–202/U.
	1	Band Pass Filter F–203/U.
	1	Band Pass Filter F–204/U.
9	1	Antenna Case CY–1371/TRC.
	2	Antenna AS–639/TRC (100–225 mc) each including:
	3	Antenna Dipole AT–412/TRC.
	1	Radio Frequency Cable Assembly CG–1042/U.
	1	Adapter Connector UG–643/U.
10	1	Antenna Case CY–1370/TRC.
	2	Antennas AS–640/TRC (225–400 mc) each including:
	3	Antenna Dipole AT–413/TRC.
	1	Radio Frequency Cable Assembly CG–1042/U.
	1	Adapter UG–643/U.
11	1	Antenna Reflector Case CY–1385/TRC.
	2	Antenna Reflector AT–414/TRC.
	1	A-frame.
12	1	Antenna Reflector Support Case CY–1387/TRC.
	1	Antenna Reflector Support AB–325/TRC.
	4	Guy MX–1483/G (75 ft).
	2	Reel assembly.
	4	Anchor shackle with 2-in. ring.
	2	Reflector shackle.
	6	Rf cable clamp.
	1	Offset handle box wrench, 9/16-in. and 1/2-in. hex. head.
	1	Offset head open end wrench, 7/8-in. hex. head.
	1	Ratchet socket handle, 1/2-in. square drive.
	1	Removable socket, 1/2-in., 1/2-in. square drive.
	1	Removable socket, 9/16-in., 1/2-in. square drive.
13	2	Cable Reel RC–404/TR.
	4	Radio Frequency Cable Assembly CG–1030/U (80 ft).
14	1	Accessories Case CY–1392/G.
	1	Mast base.
	5	Guy MX–1484/G (70 ft).
	4	Guy MX–1483/G (58 ft).
	4	Guy MX–1483/G (50 ft).
	7	Reel Assembly.
	2	Guy ropes.
	5	Guy attachment plates.
	5	Guy plate.
	1	Gin-pole cap.
	1	Block and tackle.
	1	Erection instruction chart.
	2	Tape TL–83.
	2	Tape TL–192.
15	3	Mast section carrier.
	15	Mast Section AB–332/G.
16	1	Stake carrier.
	5	Guy Stake GP–113/G.
	4	Ground Stake G–P2.
	1	Hammer HM–3, cross-peen, sledge, type SA, 8 lb, class 1.
17	1	Cable Reel RC–405/TR.
	1	Electrical Power Cable Assembly CX–2251/U (150 ft).
18	1	Accessories Case CY–1343/TRC.
	1	Wattmeter ME–82/U.
	1	Interconnecting Box J–532/U.
	1	Switch Box SA–331/U.
	1	Radio Frequency Cable Assembly CG–718/U (5 ft).
	2	Electrical Power Cable Assembly CX–2254/U (10 ft).
	12	Fuses, 10 amp.
	1	Screwdriver TL–358/U.
		Supplementary accessories group including:
	2	Gasoline Engine Generator Set PU–286/G.
	10	Blitz cans.
	2	Spouts.
	2	Ground Rod MX–148/G.
	2	Clamp TM–106.

Note. Some of the accessory cases in Accessory Kit MK–133/TRC do not contain circuit label books (crate No. 6). They may, however, be secured to the sides of transit cases during shipment. The circuit labels should be stored in the accessory case at the earliest opportunity following uncrating or prior to installation. On order No. 32146–Phila–51, the contents of crate No. 1

have been changed to include one book of circuit labels for Radio Transmitter T-302A/TRC and Radio Frequency Amplifier-Multiplier AM-915A/TRC. The contents of crate No. 2 have been changed to include one book of circuit labels for Radio Receiver R-417A/TRC and Amplifier-Converter AM-914/TRC. In addition, the contents of crate No. 3 have been changed to include one book of circuit labels for Power Supply PP-685A/TRC; crate No. 4 has one book of circuit labels for Radio Frequency Amplifier AM-912A/TRC and Amplifier-Converter AM-913/TRC. The book of circuit labels for the transmitter, the transmitter rf tuners, Power Supply PP-685A/TRC, the receiver, and the receiver rf tuners have been removed from crate No. 6. The items listed below have been removed from crate No. 6 and placed in crate No. 18.

Quantity	Item
1	Radio Frequency Cable Assembly CG-1091/U.
2	Radio Frequency Cable Assembly CG-789/U.
1	Radio Frequency Cable Assembly CG-1103/U.
2	Electrical Special Purpose Cable Assembly CX-2406/U.
1	Electrical Special Purpose Cable Assembly CX-2420/U.
1	Electrical Special Purpose Cable Assembly CX-2473/U.

d. Dimensions and Weights of Cases. The weight given for each case listed below includes the weights of the components normally shipped within that case.

Case	Height (in.)	Depth (in.)	Length (in.)	Volume (cu ft)	Unit weight (lb)
Transmitter Case CY-1341/TRC	18½	22	20⅝	4.7	120.75
Receiver Case CY-1339/TRC	17⅛	18¼	20⅝	3.7	96.5
Power Supply Case CY-1340/TRC	17⅛	18⅜	20⅝	3.8	115
Electrical Standardized Components Case CY-1338/TRC	18⅜	17⅛	20⅝	3.8	39
Accessories Case CY-1342/TRC	18⅝	20⅝	21½	4.7	94
Accessories Case CY-1344/TRC	18¼	12¼	20½	2.7	
Antenna Case CY-1371/TRC	9½	17	29	2.6	92
Antenna Case CY-1370/TRC	9½	21⅜	24⅞	2.9	66
Antenna Reflector Case CY-1385/TRC	12½	33⅜	51¾	12.5	132
Antenna Reflector Support Case CY-1387/TRC	6½	30	33⅝	3.8	70
Accessories Case CY-1392/G	11⅛	17¼	19⅞	2.2	126
Accessories Case CY-1343/TRC	18⅝	20⅝	21½	4.7	140

8. Nomenclature Assignments

Given in the table below are the common names assigned to the various components in Radio Set AN/TRC-24, Radio Terminal Set AN/TRC-35, and Radio Relay Set AN/TRC-36, and also to other components mentioned in this manual.

Component	Common nomenclature used in text
Radio Terminal Set AN/TRC-35	Radio-terminal set.
Radio Relay Set AN/TRC-36	Radio-relay set.
Radio Set AN/TRC-24	Radio set.
Radio Transmitter T-302/TRC	Transmitter.
Radio Receiver R-417/TRC	Receiver.
Power Supply PP-685/TRC	Power supply.
Autotransformer Fixed Power Transformer TF-167/TRC.	Autotransformer TF-167/TRC.
Handset H-90/U	Handset.
Interconnecting Box J-532/U	Interconnecting box.
Switch Box SA-331/U	Switch box.
Wattmeter ME-82/U	Wattmeter.
Amplifier-Converter AM-913/TRC	Receiver B-band r-f tuner.
Amplifier-Converter AM-914/TRC	Receiver C-band r-f tuner.
Radio Frequency Amplifier AM-912/TRC.	Transmitter B-band r-f tuner.
Radio Frequency Amplifier-Multiplier AM-915/TRC.	Transmitter C-band r-f tuner.
Electrical Standardized Components Case CY-1338/TRC.	Tuner case.
Band Pass Filter F-192/U through F-197/U and F-199/U through F-204/U.	Band-pass filter.
Gasoline Engine Generator Set PU-286/G.	Power Unit PU-286/G.
Telephone Terminal AN/TCC-3	AN/TCC-3.
Telephone Terminal AN/TCC-7	AN/TCC-7.
Radio Frequency Cable Assembly CG-1030/U.	Coaxial rf cable.
Telephone Cable Assembly CX-1512/U.	Cable stub.
Cable Assembly CX-1065/U	Spiral-four cable.

9. Description of Radio Transmitter T–302/TRC

a. General.

(1) Radio Transmitter T–302/TRC (fig. 6) is of the frequency-modulated (fm) type and operates on certain fixed radio-frequency (rf) channels. The transmitter may be operated in the frequency range from 50 to 600 megacycles (mc) but only the range from 100 to 400 mc is available now.

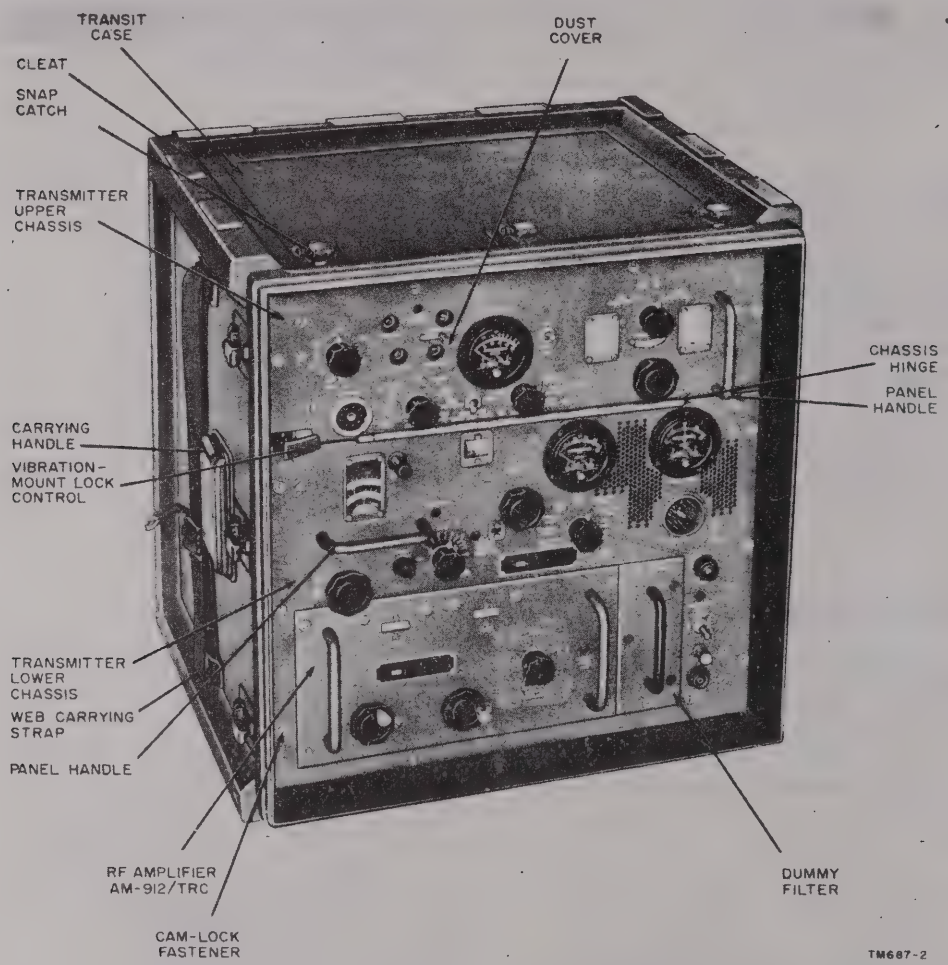

Figure 6. Radio Transmitter T–302/TRC.

(2) Radio Transmitter T–302/TRC consists of an upper and lower chassis on which are mounted seven plug-in assemblies (figs. 7 and 8) and a transit case (Transmitter Case CY–1341/TRC (fig. 6)). Cleats on the top and bottom of the transit case permit secure stacking of the transmitter with other components. The transit case has web carrying straps and carrying handles on the sides. Twelve cam-lock fasteners secure the transmitter to its transit case. Rollers on the bottom of the frame and two handles on the front panel are used to remove the transmitter from its transit case. Drawer stops on the roller supports on the side of the chassis prevent accidental removal of the chassis from its transit case.

(3) The upper chassis of the transmitter (fig. 7) is hinged to the lower chassis and can be supported in an almost vertical position by means of the hinged brace. The transmitter upper

chassis has handles (fig. 8) to raise it. The transmitter upper chassis is secured to the lower chassis by the hinge at the front and by cam-lock fasteners at the rear (fig. 7).

(4) Radio Transmitter T–302/TRC is a basic unit and must be equipped with certain plug-in units besides the seven plug-in assemblies before it can be used.

(5) A blower motor (fig. 7) and an air-cooling duct assembly are mounted on the transmitter lower chassis. The blower motor has an internal auto-

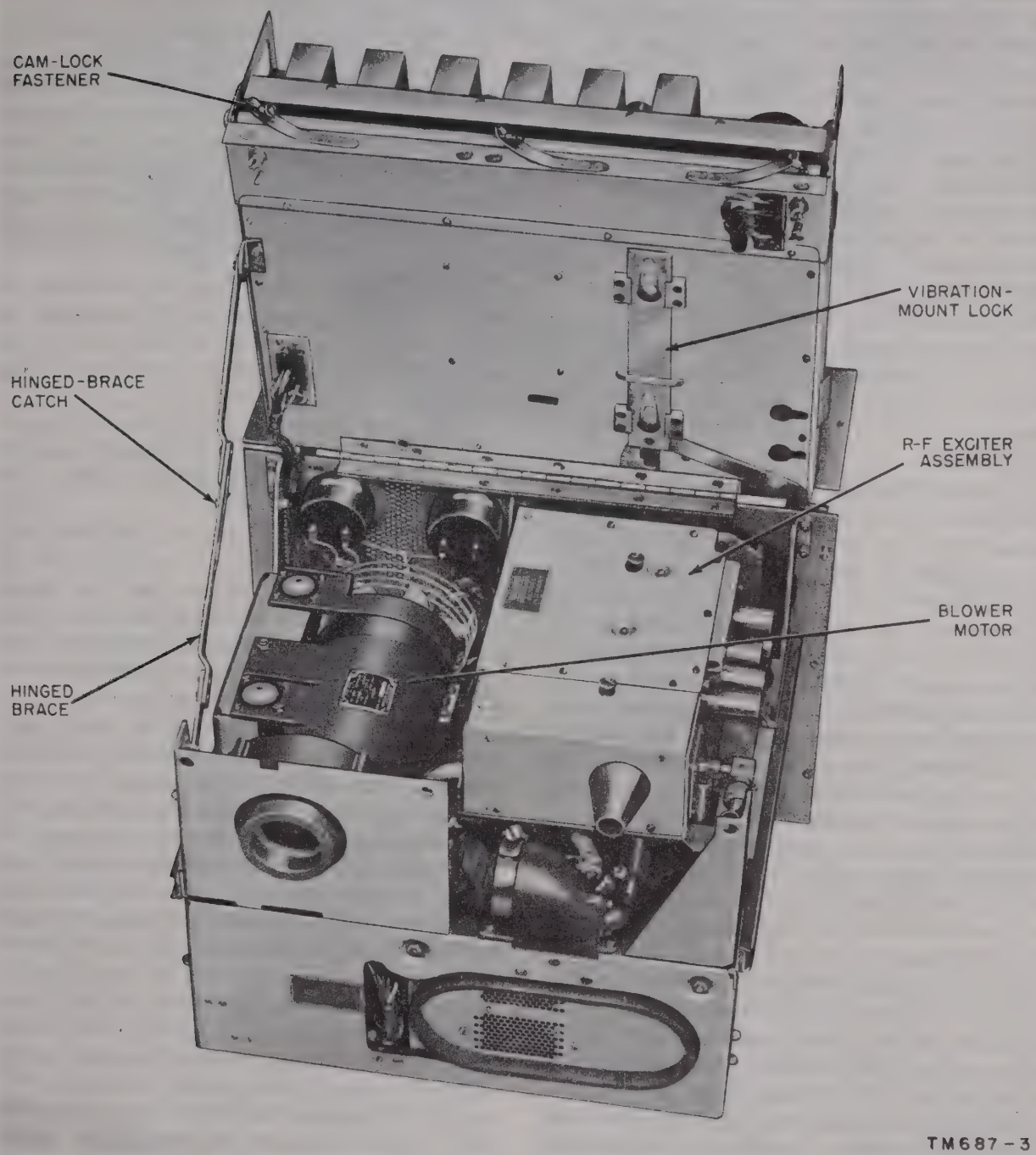

Figure 7. Radio Transmitter T–302/TRC, upper chassis in raised position.

matic switch that cuts off the +750-volt dc input to the transmitter when the blower motor fails. This prevents the overheating of the transmitter circuit elements.

b. Upper Chassis Front Panel. The controls and instruments on the transmitter upper chassis front panel are grouped for convenient use. At the left side of the panel are the transmitter MEASURE switch and meter (figs. 6 and 87). The transmitter MEASURE switch connects the transmitter MEASURE meter circuit to measure the magnitude of the signals in the various circuits of the transmitter. The AFC switch, located in the center of the upper chassis front panel, is used as an ON-OFF switch for the transmitter automatic frequency control (afc) circuits. The PULSED OSC TUNE control, PULSED OSC switch, and the PULSED OSC dials located on the right of the upper chassis front panel are used with the XTAL SEL switch when adjusting the transmitter to a desired rf channel. The RECEIVER connecting jack is located below the INPUT ADJ control.

c. Lower Chassis Front Panel (fig. 87). The transmitter lower chassis front panel has a compartment for the rf tuner and the band-pass or dummy filter. The RF CHANNEL TUNE control, RF CHANNEL dial, and INDEX control (fig. 6) are located at the upper left of the lower chassis front panel. These controls adjust the transmitter to the desired rf channel. The LOCK control located below the panel handle locks the RF CHANNEL TUNE control after it has been adjusted to a desired rf channel. The AFC control is located in the upper left of the front panel. The AFC control serves as a manual control for the transmitter afc circuits. The DRIVER TUNE control and DRIVER TUNE dial are located near the center of the front panel. The DRIVER TUNE control is used to tune the driver stage of the transmitter as indicated on the DRIVER TUNE dial. Slightly to the right of the center of the front panel are the TEST meter and the TEST switch. The TEST switch connects the TEST meter circuit to indicate the magnitude of currents in various circuits of the transmitter. The transmitter FREQ DRIFT meter located at the right of the TEST meter indicates the amount of frequency drift of the transmitter from the desired rf channel. The POWER SUPPLY connector is located below the transmitter FREQ DRIFT meter. Along the lower right of the front panel are the LOW PWR ALARM lamp, the THRESHOLD ADJ control, and the ALARM switch. The GND binding post and the ANTENNA input connector are located under the ALARM switch.

d. Transmitter I-F Amplifier Assembly. The transmitter intermediate-frequency (if) amplifier assembly is a plug-in assembly mounted at the rear of the transmitter upper chassis (fig. 8) with cam-lock fasteners. Finger grips at the end of this assembly facilitate removal. The if. amplifier assembly contains the circuits that operate the afc if. amplifiers, the afc limiters, and the afc discriminator.

e. Transmitter Base-Band Amplifier Assembly. The transmitter base-band amplifier assembly is a plug-in assembly mounted on the left side of the transmitter upper chassis (fig. 8) with cam-lock fasteners.

(1) The base-band amplifier provides amplification of the base-band signals in the range from 250 to 68,000 cycles per second (cps).

(2) The metering circuit in the base-band amplifier assembly measures the incoming test signals and the signal levels in various circuits of the transmitter. An internal 1-kilocycle (kc) test oscillator is used to modulate the carrier signal for test purposes.

f. Crystal-Oscillator Assembly. The crystal-oscillator assembly is a plug-in assembly mounted in the center of the transmitter upper chassis with cam-lock fasteners. The crystal-oscillator assembly provides pulses spaced to correspond to a repetition rate of either .5 mc or 2.5 mc. For normal operation, the .5-mc pulses are used for control purposes. The 2.5-mc pulses are used only as an aid in setting the index on the RF CHANNEL TUNE dial.

g. Pulsed-Oscillator Assembly. The pulsed-oscillator assembly is a plug-in assembly mounted at the right front of the transmitter upper chassis with cam-lock fasteners.

(1) The pulsed oscillator provides a tunable spectrum of frequencies spaced at .5-mc or 2.5-mc intervals.

(2) The mixer, which is part of the

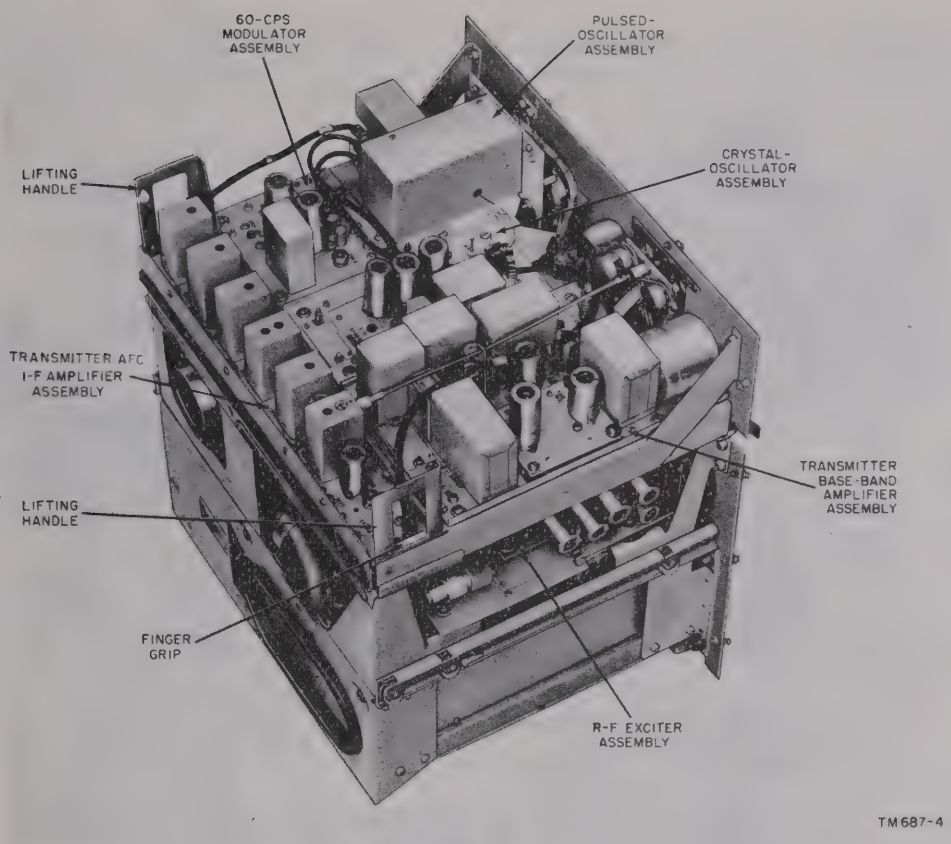

Figure 8. Radio Transmitter T–302/TRC, rear oblique view.

pulsed-oscillator assembly, mixes the output of the pulsed oscillator with a portion of the base rf oscillator carrier; the combined output is suitable for afc operation.

h. 60-Cps Modulator Assembly. The 60-cps modulator assembly is a plug-in assembly mounted on the right side of the transmitter chassis behind the pulsed-oscillator assembly. The plug-in assembly is secured to the transmitter with chassis cam-lock fasteners. The 60-cps modulator assembly supplies alternating-current (ac) voltage to the afc motor for afc operation.

i. Rf Exciter Assembly. The rf exciter assembly is a plug-in assembly mounted at the upper left of the transmitter lower chassis (fig. 7) with cam-lock fasteners. It contains the base rf oscillator, reactance tubes for frequency modulation, buffer stages, and a driver stage. The driver stage is shielded from the other stages. The afc motor is also mounted on the exciter assembly The exciter assembly is shock mounted.

j. Alarm Circuit Assembly. The alarm circuit assembly is a plug-in assembly mounted at the right rear side of the transmitter lower chassis (fig. 9). This plug-in assembly is secured to the transmitter chassis by cam-lock fasteners. The alarm assembly contains amplifiers and a relay for operation of the alarm buzzer and the LOW PWR ALARM lamp.

10. Description of Band-Pass Filters (fig. 10)

a. Twelve band-pass filters are provided with Radio Set AN/TRC–24 (F–192/U through F–197/U and F–199/U through F–204/U). The mechanical operation of these filters is identical. The physical length of the tunable cavities is different in the 12 filters and therefore the frequency range covered is different. The overall length of the tuners is identical and any of the filters may be plugged into either the trans-

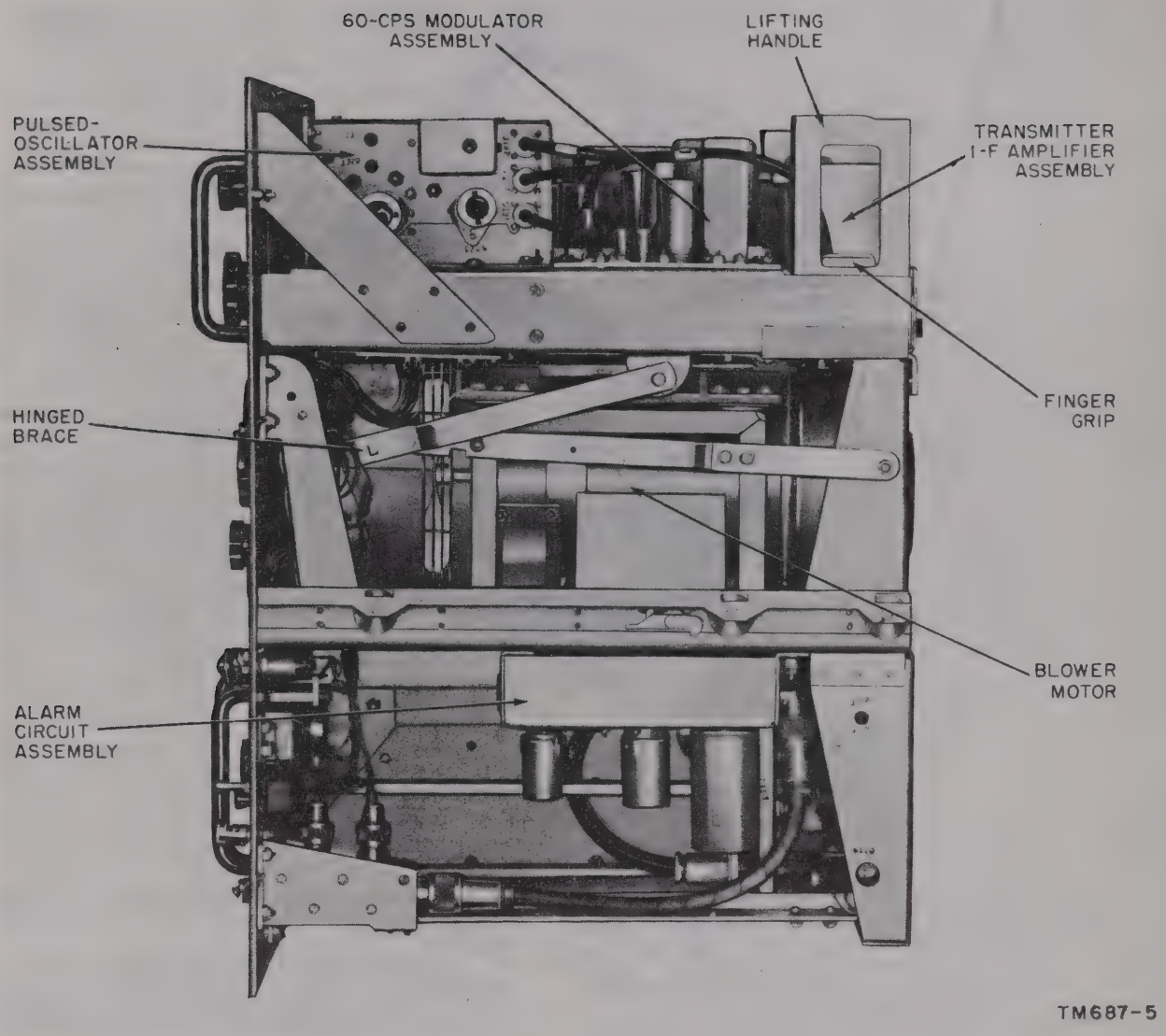

Figure 9. Radio Transmitter T-302/TRC, right side view.

mitter or receiver. Cam-lock fasteners are used to secure the filter in the transmitter, receiver, or filter case.

b. The band-pass filters provide additional selectivity by the suppression of noise, interference, harmonics, and spurious and intermodulation radiations. The 12 filters provided cover the frequency range from 100 to 400 mc. Each filter covers a range approximately 25 mc. The band-pass filters consist of a plug-in framework with input and output coaxial connectors and a pair of tunable cavity structures. Figure 150 shows a simplified drawing of the band-pass filter with its mechanical and electrical features.

c. The front panel of each band-pass filter has two calibrated dials that are used while tuning the filter to the correct operating frequency (fig. 10). Both the radio-frequency channel number and the corresponding frequency are marked on the front-panel dials.

11. Description of Dummy Filters

For installations not requiring band-pass filters and for use during the starting period, a dummy filter is provided for both the transmitter and the receiver. In figure 6, the dummy filter is shown plugged into the transmitter; in figure 21, it is shown plugged into the receiver. These two dummy filters consist of the

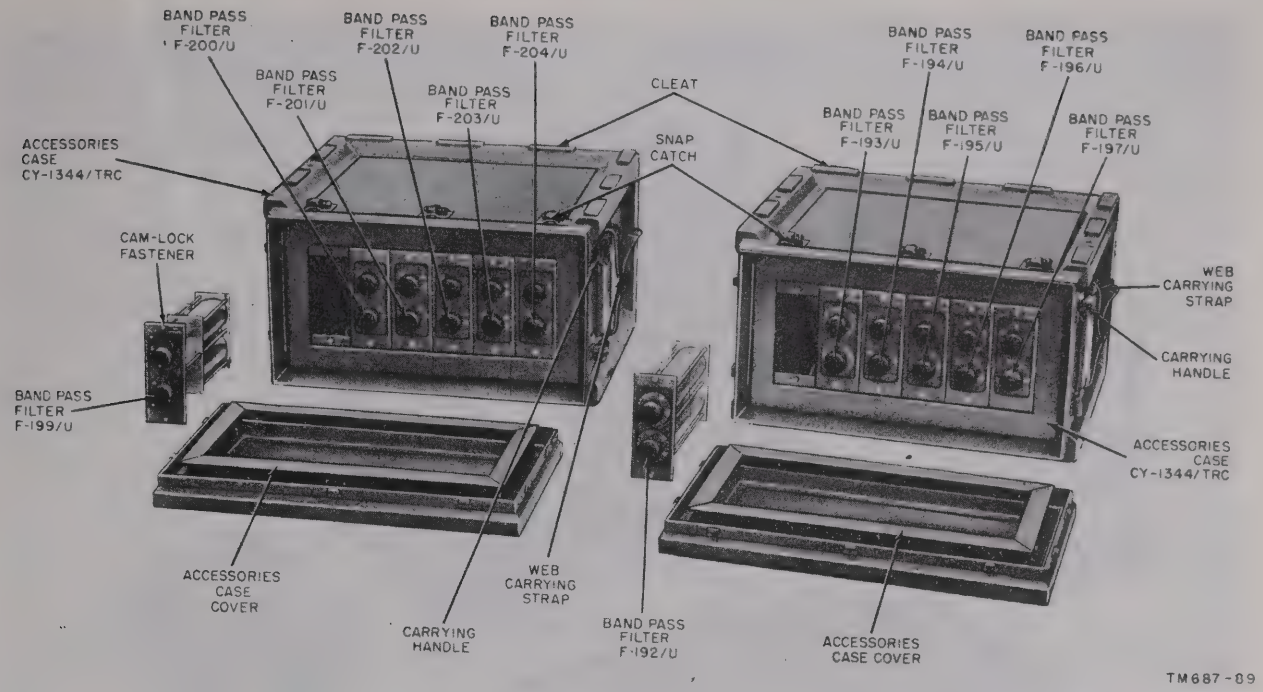

Figure 10. Band-pass filters and accessories cases.

same plug-in mechanical framework used for the band-pass filters (par. 10). A short length of 50-ohm coaxial cable connects the input and output coaxial connectors. A handle on the front panel of the dummy filter makes its removal easy.

12. Description of Radio Frequency Amplifier AM–912/TRC

a. General. Radio Frequency Amplifier AM–912/TRC (fig. 11) is a plug-in unit used in the transmitter for the B-band frequency range of 100 to 225 mc. This tuner is an rf amplifier with coaxial-cavity structures for the grid and plate-tuned circuits. An air duct system is provided for cooling the vacuum tube (par. 9*a* (5)).

b. Front Panel.

(1) Two handles are provided on the front panel of the transmitter B-band rf tuner to remove the tuner from the transmitter or from the tuner case in which it is stored. Cam-lock fasteners secure the front panel of the tuner to the transmitter or to the tuner case.

(2) The controls and indicators on the front panel of the transmitter B-band rf tuner are conveniently grouped for practical use. At the top of the front panel are the GRID and PLATE dials (fig. 88). These dials are marked with the numbers of the radio-frequency channels and are controlled by the GRID and PLATE controls at the bottom of the front panel. The AMPLIFIER OUTPUT COUPLING control, which is used to adjust the output coupling of the tuner, is located at the right center of the front panel. The SCREEN VOLTS ADJ control, which is located at the right of the front panel, is used to adjust the voltage applied to the screen grid of the power amplifier (fig. 269).

13. Description of Radio Frequency Amplifier-Multiplier AM–915/TRC

a. General. Radio Frequency Amplifier-Multiplier AM–915/TRC (fig. 11) is a plug-in unit used in the transmitter for the C-band frequency range of 225 to 400 mc. This tuner consists of a frequency doubler and an rf amplifier that has coaxial cavity structures for the grid and plate-tuned circuits. Rf input, frequency range of 225 to 400 mc. This tuner

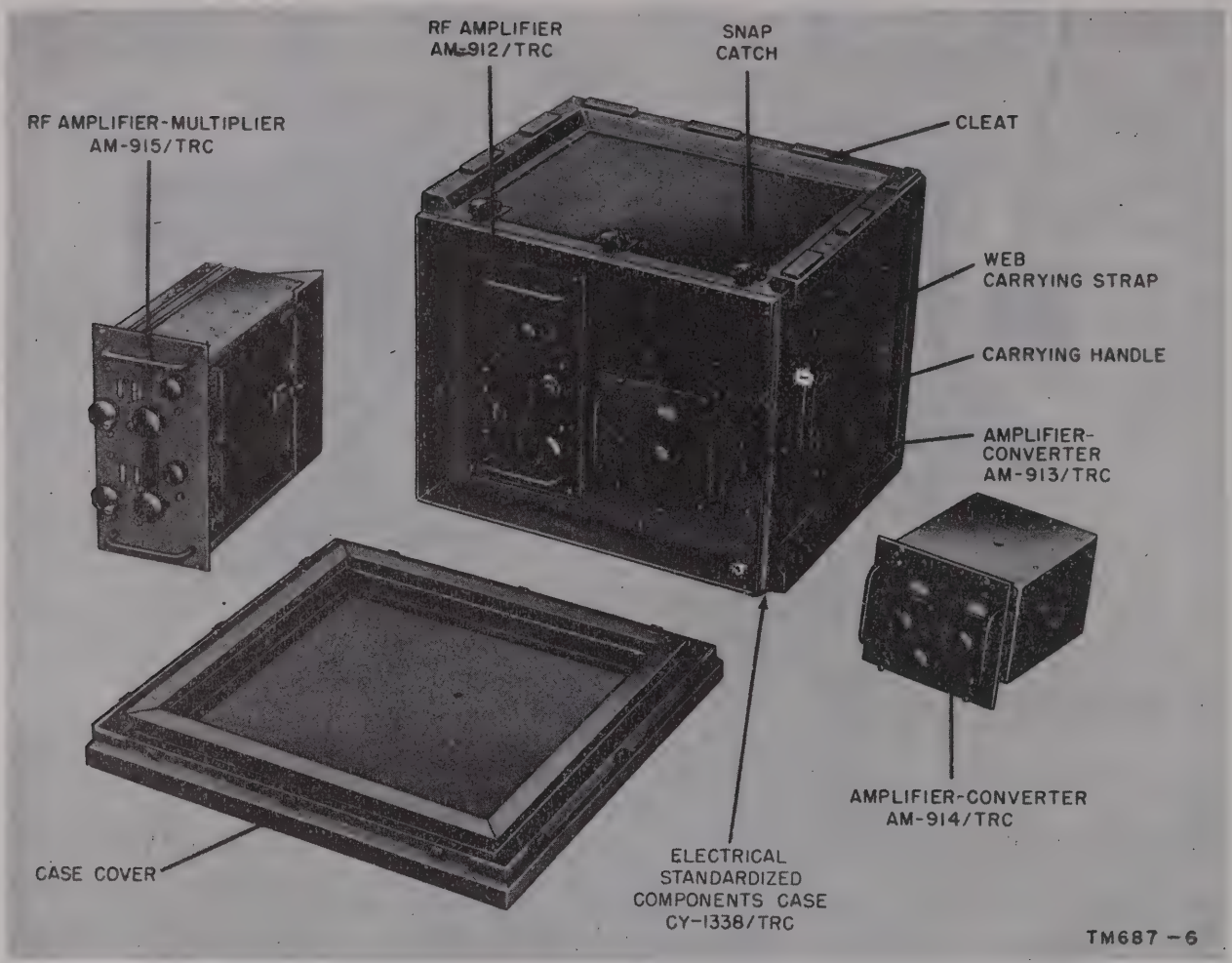

Figure 11. Rf tuners and accessories case.

connections are provided in the tuner. An air duct system for cooling the tuner vacuum tubes is also provided in the tuner (par. 9*a* (5)).

b. Front Panel.

(1) The front panel of the transmitter C-band rf tuner has two handles to remove the tuner from the transmitter or from the tuner case in which it is stored. Cam-lock fasteners secure the front panel of this tuner to the transmitter or to the tuner case.

(2) The MULTIPLIER GRID and MULTIPLIER PLATE controls and the associated dials are located at the upper left of the front panel (fig. 89).

(3) These controls tune the multiplier stage of the tuner. The POWER AMPLIFIER GRID and POWER AMPLIFIER PLATE controls and the associated dials are located at the upper right of the front panel. These controls tune the power-amplifier stage of the tuner. The MULTIPLIER OUTPUT COUPLING control, which adjusts the output coupling of the multiplier stage, is located at the bottom center of the front panel. The AMPLIFIER OUTPUT COUPLING control, which is located at the lower right side of the front panel, adjusts the output coupling of the amplifier stage of the tuner. The SCREEN VOLTS ADJ control adjusts the voltage applied to the screen grids of the amplifiers (fig. 270).

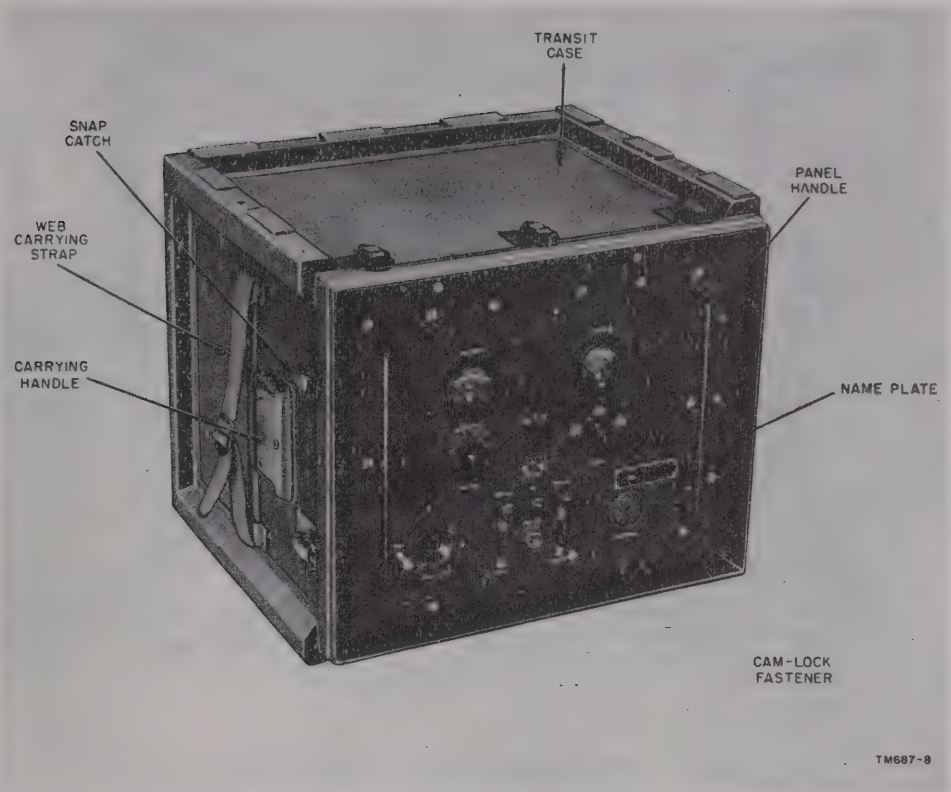

Figure 12. Power Supply PP-685/TRC, oblique view.

14. Description of Power Supply PP–685/TRC (fig. 12)

a. General.

(1) This power supply consists of one chassis, on which is mounted one plug-in assembly, and a transit case (Power Supply Case CY–1340/TRC). Cleats on the top and bottom of the transit case permit secure stacking of the power supply with other components. Web-carrying straps and carrying handles are provided on the sides of the transit case. Ten cam-lock fasteners secure the power supply to its transit case. Rollers on the bottom of the frame and two handles on the front panel make it easy to remove the power supply from its transit case. Drawer stops, located on the roller supports on the sides of the chassis, prevent accidental removal of the chassis from its transit case. An overload current adjustment and a power cable adapter are provided in the power supply (fig. 13).

(2) Power Supply PP–685/TRC provides all the power required by Radio Transmitter T–302/TRC and negative bias voltage for Radio Receiver R–417/TRC. The power supply operates from a single-phase, 115-volt, 10-ampere, 50- to 60-cps source of power.

(3) Overcurrent circuit breakers and an automatic relay circuit are provided for the 750-volt rectifier circuit of the power supply. An interlock circuit, which disables the 750-volt rectifier, also is provided as a safety measure.

b. Front Panel. The controls and instruments on the power supply front panel are grouped for convenience. At the upper left of the front panel are the AC VOLTS meter and the 750V ADJ switch (fig. 90). The AC VOLTS meter indicates the magnitude of the input voltage to the power supply. The 750V ADJ switch is used to adjust the +750-volt output of the power supply. The DC VOLTS meter

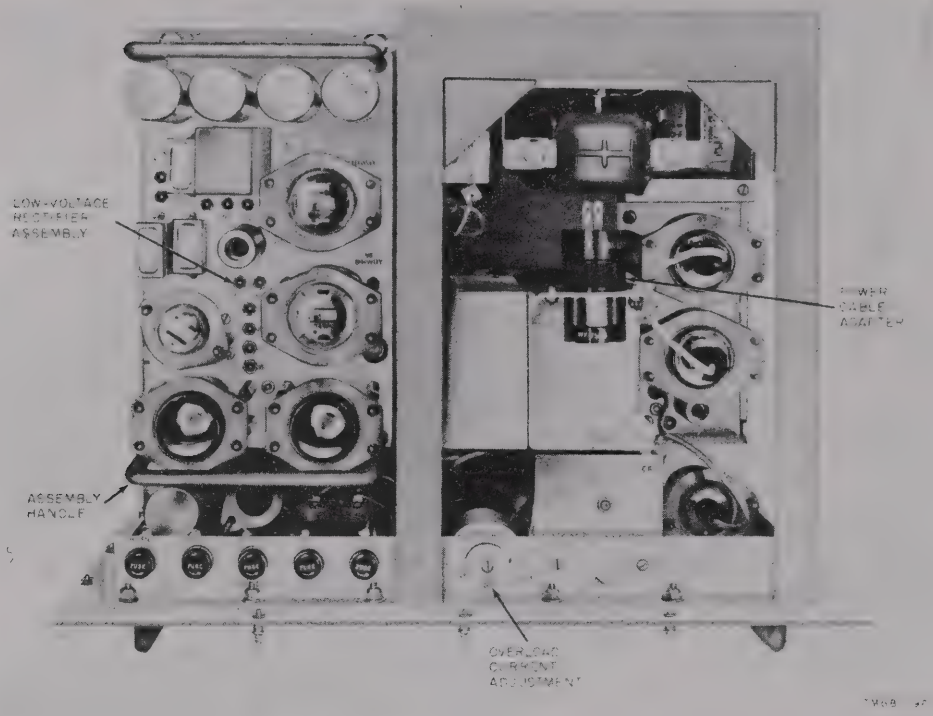

Figure 13. Power Supply PP–685/TRC, top view.

and the DC TEST switch are located at the upper right of the front panel. The DC VOLTS meter, depending on the position of the DC TEST switch, indicates the magnitude of three of the dc outputs of the power supply. The 115V AC circuit-breaker type switch, located at the center of the front panel, is used as an ON-OFF switch for the power supply. The 150V DC switch, located at the lower center of the front panel, is used as an ON-OFF switch for the 150-volt dc output of the power supply. The 750V DC switch, located at the lower center of the front panel, is used as an ON-OFF switch for the 750-volt dc output of the power supply. The 150V DC, FIL, and 750V DC lamps indicate that ac voltage is applied to the respective circuits. These lamps are covered by amber-colored jewels and are located below the 115V AC switch. The 150V ADJ control, located between the 150V DC and the 750V DC switch, is used to adjust the 150-volt dc output of the power supply. The TRANSMITTER output connector is at the lower right of the front panel. The GND binding post and the 115V AC INPUT connector are at the lower left of the front panel.

c. Low-Voltage Rectifier Assembly.

(1) The low-voltage rectifier assembly is a plug-in assembly. It is mounted at the left side of the power-supply chassis (fig. 13). Cam-lock fasteners secure this plug-in assembly to the power-supply chassis.

(2) The low-voltage rectifier assembly which contains the rectifier and regulator circuits, produces an unregulated +250-volt and a regulated +150-volt output.

15. Description of Mast AB–235/G and Antenna System (fig. 14)

a. Mast AB–235/G. This mast is a guyed, sectional steel mast designed to support the antenna system of the radio set. The maximum height at which the mast will support the antenna system is 45 feet. The mast consists of nine 5-foot sections that are coupled to each other. After the mast is erected, it is supported by guy wires at three different levels of elevation with four guy wires at each level. After the mast is disassembled, the nine 5-foot Mast Sections AB–332/G are assembled into three groups and mounted in three mast-section carriers (fig. 14). Six additional 5-foot mast sections are available to construct a gin

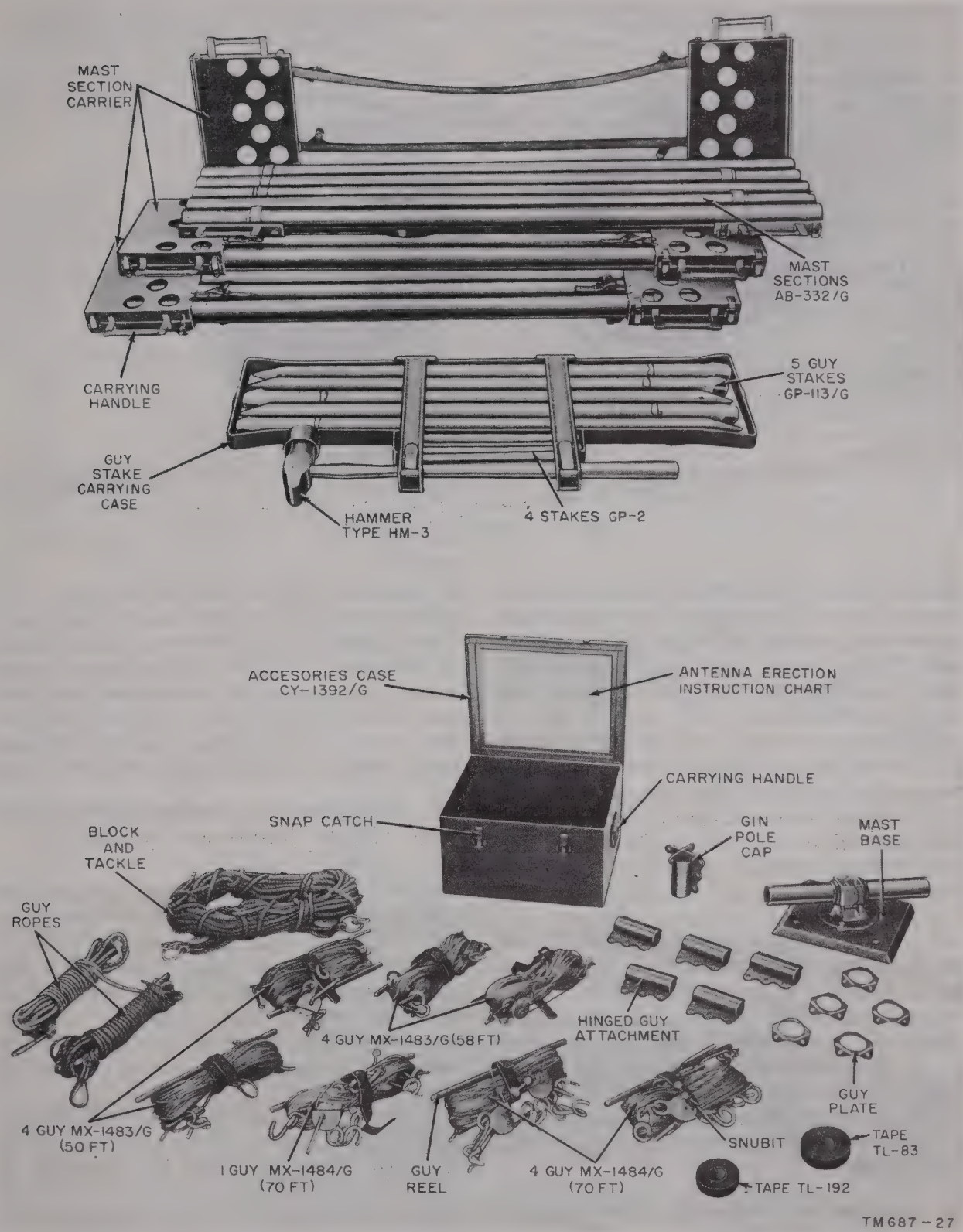

Figure 14. Mast AB-235/G group parts.

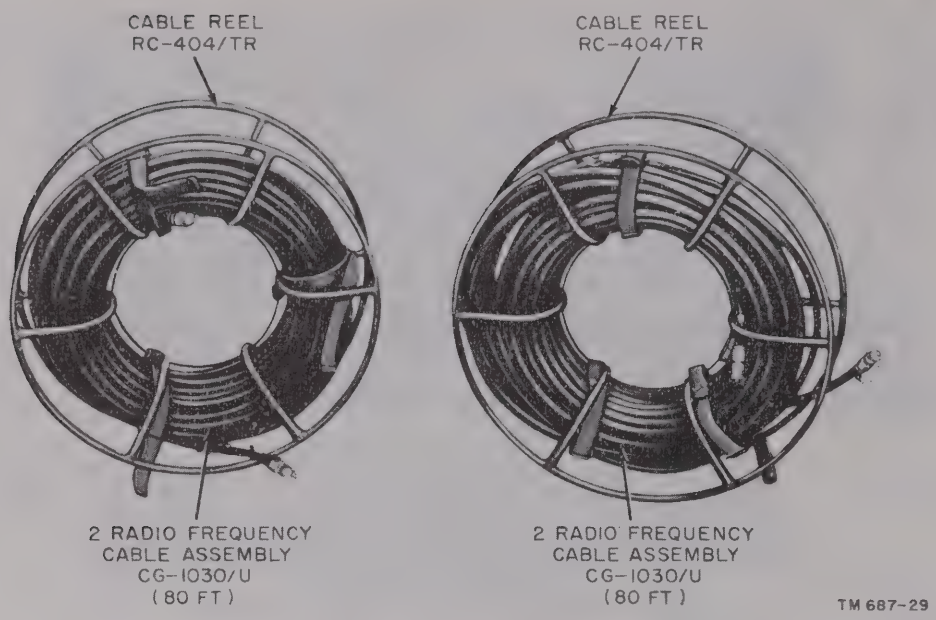

Figure 15. Cable reels and cable.

pole for erecting the mast and for mast-section spares. Guy and mast base stakes and a sledge hammer are included in the guy stake carrying case. The guy wires, mast base, and block and tackle assemblies are contained in Accessories Case CY–1392/G.

b. Antenna System. Two antennas, which may be mounted on a single mast or on separate ones, are supplied with each radio set; one is for transmitting and one is for receiving. Each antenna is connected to the transmitter or receiver by coaxial rf cable (fig. 15). Each antenna consists of a pair of dipoles (fig. 17), a plane reflector, and an antenna-reflector support (fig. 16). A rod-type dipole is used for the 225- to 400-mc range (C-band) and a V-type dipole is used for the 100- to 225-mc range (B-band). Several adjustments of dipole lengths and dipole-reflector spacings are necessary to cover the frequency ranges. Horizontal, vertical, or cross-polarization of both the transmitting and receiving antennas can be obtained by proper mounting of the reflectors on the antenna mast.

16. Description of Gasoline Engine Generator Set PU–286/G

Gasoline Engine Generator Set PU–286/G (fig. 18) is a 5,000-watt gasoline-engine driven ac generator with a Dyer Drive starter. The engine speed is controlled automatically by a fully inclosed built-in governor. It is designed to generate a 120-volt, single-phase, 60-cps output. The power unit is mounted on a steel skid base and is supplied with carrying handles. Refer to the manual packed with each power unit for detailed operating instructions.

17. Description of Autotransformer Fixed Power Transformer TF–167/TRC (figs. 19 and 20)

Autotransformer Fixed Power Transformer TF–167/TRC adjusts the line voltage to 115 volts ac, which both Power Supply PP–685/TRC and the radio receiver require. Cover plates are mounted with captive screws on the front and rear of the transformer when it is not in use. Two carrying handles and a web carrying strap are provided on the transformer case.

a. The front panel of the autotransformer (fig. 91) contains the INCR OUT switch, the 115–230V input connector, and the 230V 10 AMP, COM 20 AMP, and 115V 20 AMP fuses.

b. The back panel of the autotransformer (fig. 91) contains the XMTR and REC connectors, a convenience outlet, a convenience outlet fuse, and a GND binding post.

Control or instrument	Function
MULTIPLIER PLATE control_____	Used to adjust the length of the plate cavity; it tunes the plate circuit of the frequency multiplier. The MULTIPLIER PLATE dial, located to the right of the MULTIPLIER PLATE control, is connected to this control. The MULTIPLIER PLATE dial is marked with the numbers of the rf channels and gives an approximate reading of the rf channel to which the MULTIPLIER PLATE control is set.
MULTIPLIER OUTPUT COUPLING control.	Adjusts the coupling between the tuner frequency multiplier and power amplifier. The dial scale of this control is arbitrarily numbered in a clockwise direction from 0 to 12.
POWER AMPLIFIER GRID control.	Used to vary the setting of capacitor C19; it tunes the grid circuit of the power amplifier. The POWER AMPLIFIER GRID dial, located above and to the right of the POWER AMPLIFIER GRID control, is connected to this control.
POWER AMPLIFIER PLATE control.	Adjusts the length of the plate cavity; it tunes the plate circuit of the power amplifier. The POWER AMPLIFIER PLATE dial, located to the right of the POWER AMPLIFIER control knob, is connected to this control. The POWER AMPLIFIER PLATE dial is marked with the numbers of the rf channels. It gives an approximate indication of the position of the POWER AMPLIFIER PLATE control.
AMPLIFIER OUTPUT COUPLING control.	Adjusts the output coupling of the tuner power amplifier. The control is adjusted to produce maximum output power. The dial scale of this control is arbitrarily numbered in a clockwise direction from 0 to 12.
SCREEN VOLTS ADJ control_____	Adjusts the voltage of the regulated +200- to +350-volt output from Power Supply PP-685/TRC.

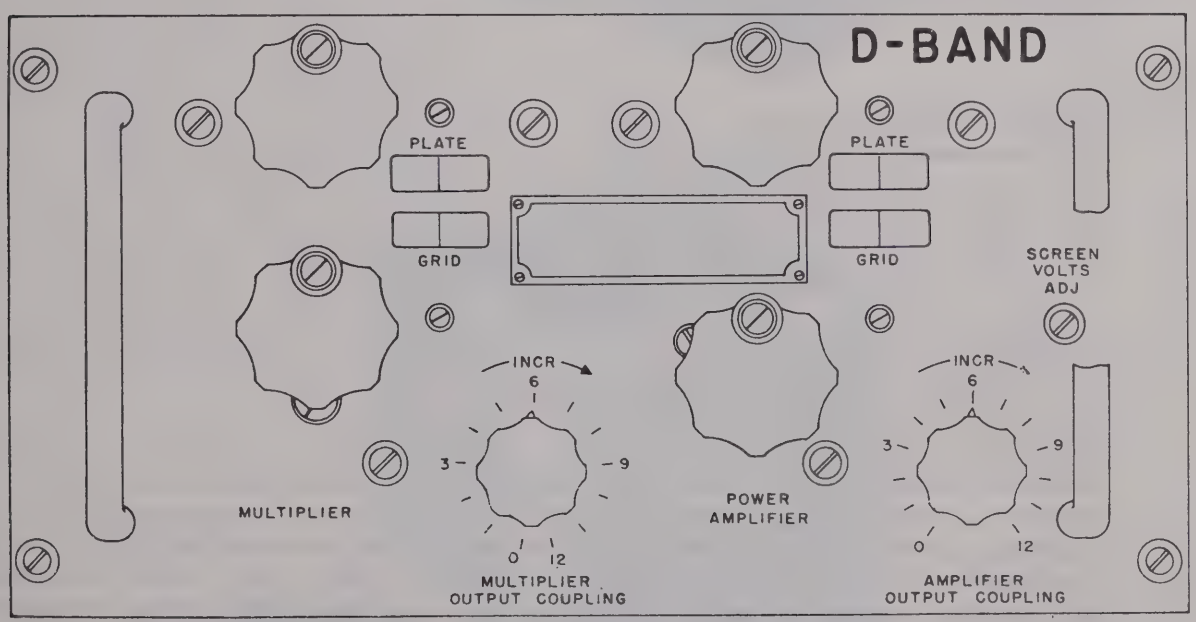

Figure 89.1. (Added) *Radio Frequency Amplifier-Multiplier AM-1178/GRC, front panel.*

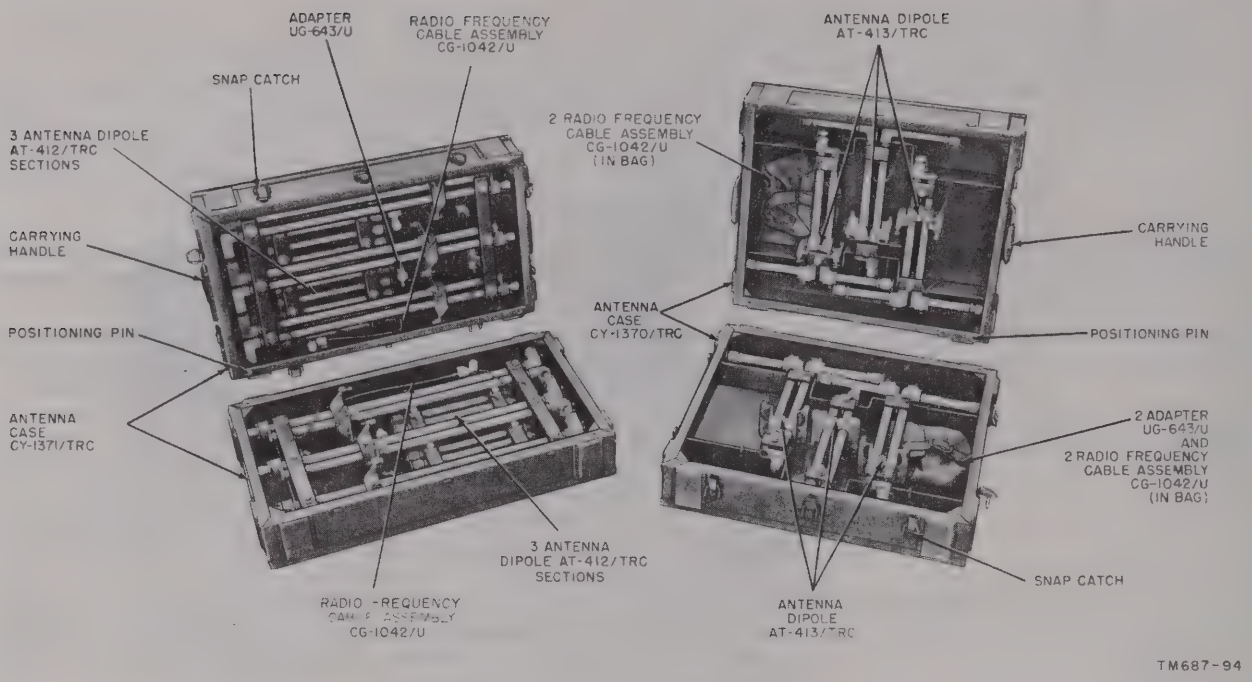

Figure 17. Receiving and transmitting antenna elements.

18. Description of Radio Receiver R–417/TRC
(fig. 21)

a. General.

(1) Radio Receiver R–417/TRC is a single - conversion superheterodyne receiver, designed to receive fm signals from Radio Transmitter T–302/TRC. The receiver operates in the frequency range from 100 to 400 mc at the present time.

(2) Radio Receiver R–417/TRC consists of a transit case (Receiver Case CY–1339/TRC) and a chassis on which are mounted five plug-in assemblies. Cleats on the top and bottom of the transit case permit secure stacking of the receiver with other components. Web carrying straps and carrying handles are provided on the sides of the transit case. Ten cam-lock fasteners secure the receiver to its transit case. Rollers on the bottom of the frame and two handles on the front panel permit removal of Radio Receiver R–417/TRC from its transit case. Drawer stops, located on the roller supports on the sides of the chassis, prevent accidental removal of the chassis from its transit case.

(3) Radio Receiver R–417/TRC is a basic unit and must be equipped with certain plug-in units besides the five plug-in assemblies before it can be used. The plug-in units consist of an rf tuner and either a band-pass filter or the dummy filter (fig. 21). The receiver is equipped with keys and interlocks to make sure that the plug-in units will be properly installed on the chassis.

b. Front Panel. The controls and instruments on the receiver front panel (fig. 93) are grouped functionally. At the upper left of the front panel are the receiver MEASURE switch, receiver AFC-OFF-CAL switch, the RING-TALK switch, the RING indicator lamp and the receiver MEASURE meter. The receiver MEASURE switch connects the receiver MEASURE meter circuit to measure the test signals in various circuits of the receiver. The RING-TALK switch is used to signal another radio station. Ringing signals are indicated

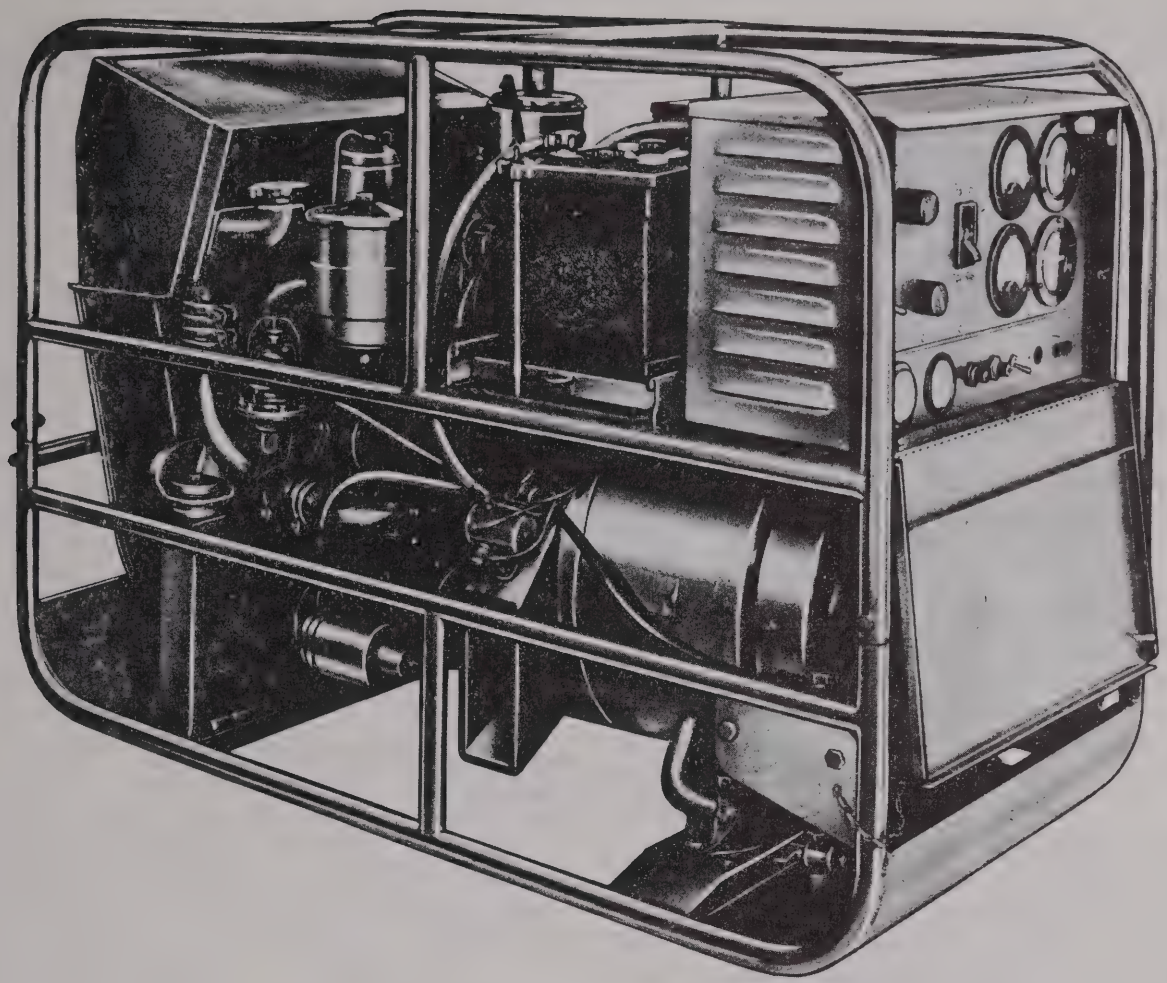

TM697-22

Figure 18. Gasoline Engine Generator Set PU-286/G.

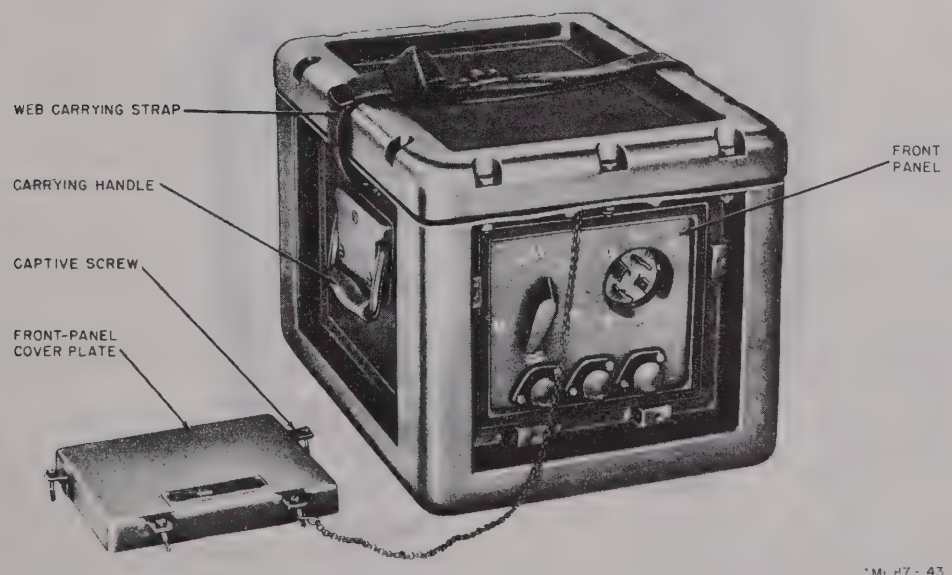

Figure 19. Autotransformer Fixed Power Transformer TF-167/TRC, front oblique view, with cover removed.

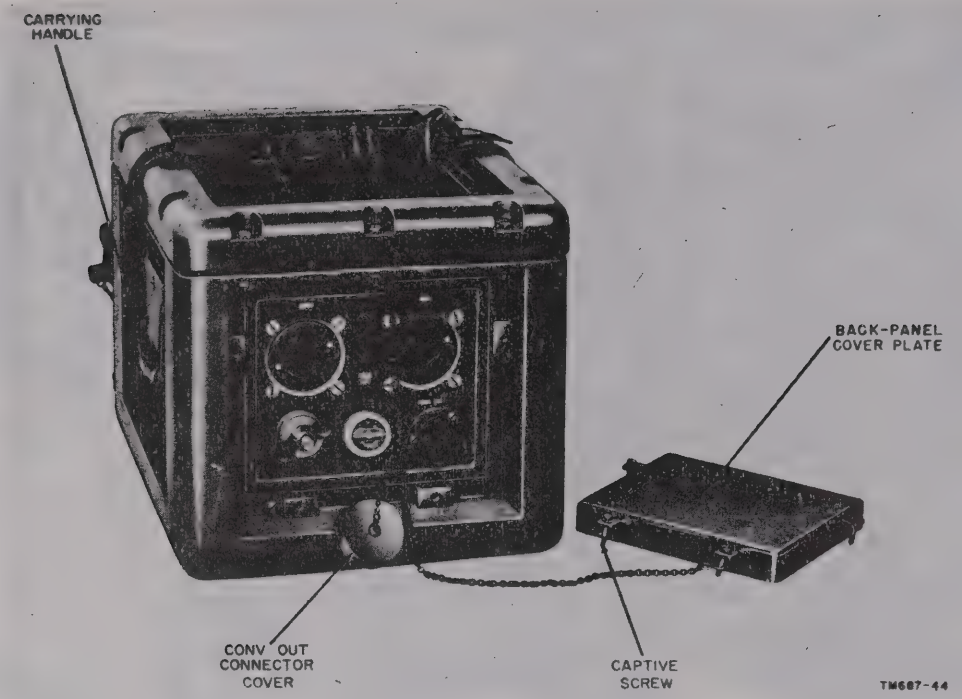

Figure 20. Autotransformer Fixed Power Transformer TF-167/TRC, rear oblique view, with cover removed.

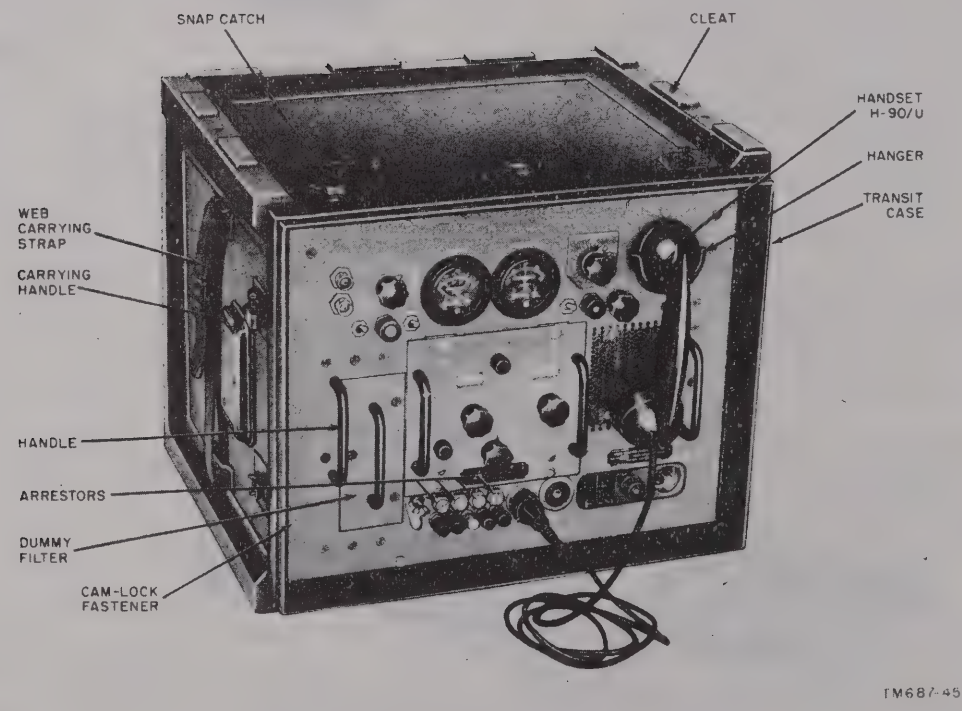

Figure 21. Radio Receiver R-417/TRC, oblique view.

by the RING indicator lamp. The receiver FREQ DRIFT meter, OUTPUT ADJ control, receiver ALARM switch, ALARM indicator lamp, and SQUELCH control are on the upper right of the front panel. The hanger for Handset H–90/U is on the upper right corner of the front panel (fig. 21). The handset cushion is located below the hanger at the lower right of the front panel. The POWER switch, POWER indicator lamp, and POWER AC connector are located at the lower right of the front panel (fig. 93). The HANDSET and TRANSMITTER connectors are on the lower center of the front panel. The REC, GND, and XMTG binding posts are to the left of the HANDSET connector. Four arresters for protection against lightning are above the REC, GND, and XMTG binding posts on the front panel. The 600 OHMS–135 OHMS switch is to the left of the REC binding posts. A receiver rf tuner and a dummy filter are plugged into their compartments.

c. Receiver If. Amplifier Assembly. The receiver if. amplifier assembly is a plug-in assembly, which is mounted at the upper rear of the receiver chassis (fig. 22). This assembly contains the 30-mc if. amplifiers and the automatic gain control (agc) circuit. Cam-lock fasteners secure the plug-in assembly to the receiver chassis.

(1) The 30-mc if. amplifier amplifies the receiver if. signals.

(2) The agc circuit provides automatic gain control for the 30-mc if. amplifier and also triggers the squelch circuit of the receiver if the level of the received signal falls too low.

d. Limiter - Discriminator - Afc Assembly. The limiter-discriminator-afc assembly is a plug-in assembly that is mounted at the top center of the receiver chassis (fig. 22). This assembly contains the limiter, discriminator, and the afc circuits. Cam-lock fasteners are used to secure this plug-in assembly to the receiver chassis.

(1) The limiter circuit eliminates amplitude variations in the output of the receiver 30-mc, if. amplifier.

(2) The discriminator circuit converts the fm signals to base-band signals and also provides an error signal for the afc circuit of the receiver.

(3) The afc circuit provides a voltage for the operation of the afc motor in the rf tuner.

e. Receiver Base-Band Amplifier Assembly. The receiver base-band amplifier assembly is a plug-in assembly that is mounted at the upper front of the receiver chassis (fig. 22). This assembly contains the receiver base-band amplifier and order-wire circuits. Cam-lock fasteners secure this plug-in assembly to the receiver chassis.

(1) The receiver base-band amplifier circuit amplifies the base-band signals in the receiver.

(2) The order-wire circuit provides voice-frequency communications and signaling facilities.

f. Power Supply Assembly. The power supply assembly is a plug-in assembly that is mounted at the lower right of the receiver chassis (fig. 23). This assembly contains the circuits that supply the correct voltages needed for operation of the receiver. Cam-lock fasteners are used to secure this plug-in assembly to the receiver chassis.

g. Calibrator Assembly. The calibrator assembly is a plug-in assembly mounted at the lower left of the receiver chassis (fig. 23). This assembly contains the calibrator circuit that provides crystal-controlled calibrating frequencies at 11-mc intervals. Cam-lock fasteners secure this plug-in assembly to the receiver chassis.

h. Special Tools (fig. 22). Special tools are placed on the receiver chassis. The location of these special tools is given in (1) through (3) below.

(1) Two tube-pin straighteners are located at the upper right corner of the receiver chassis. They are mounted on a bracket that is secured to the inside of the front panel of the receiver.

(2) Three hexagonal wrenches, which are used for removing control knobs, are held in a bracket mounted at the upper right side of the receiver chassis.

(3) An alinement tool for the if. adjustments is held in spring clamps mounted above the tube-pin straightener.

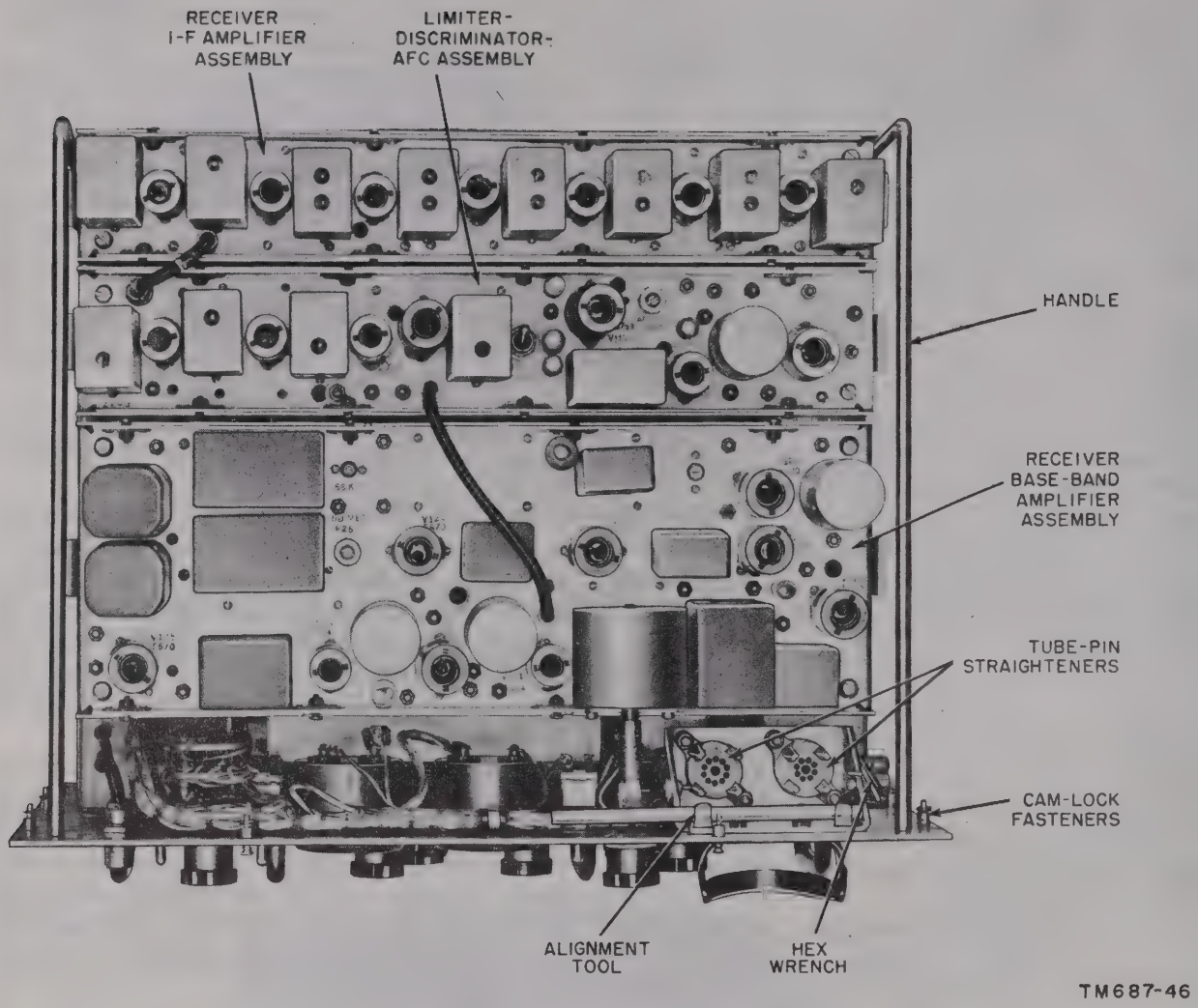

Figure 22. Radio Receiver R–417/TRC, top view.

19. Description of Amplifier-Converter AM–914/TRC (fig. 11)

a. General. Amplifier-Converter AM–914/TRC is a plug-in unit that is used in the receiver for the B-band frequency range, 225 to 400 mc. This tuner consists of two stages of cascade rf amplification, a mixer, local oscillator, and a buffer amplifier. The afc motor for afc control of the local-oscillator frequency also is contained in the receiver C-band rf tuner.

b. Front Panel.

(1) The front panel of the receiver C-band rf tuner has two handles to remove the tuner from the receiver or from the tuner case. Cam-lock fasteners secure the front panel of this tuner to the receiver or to the tuner case in which the tuner is stored.

(2) The RF AMP control and the associated RF AMP dial are located at the upper right of the front panel (fig. 95). The RF AMP control tunes the rf amplifier circuits of the tuner. The OSC COARSE and OSC FINE controls, located at the left of the front panel, are used to tune the oscillator stage of the tuner. The OSC dial, located above the OSC COARSE control, provides an indication of oscillator tuning. The INDEX control is used to adjust the position of the in-

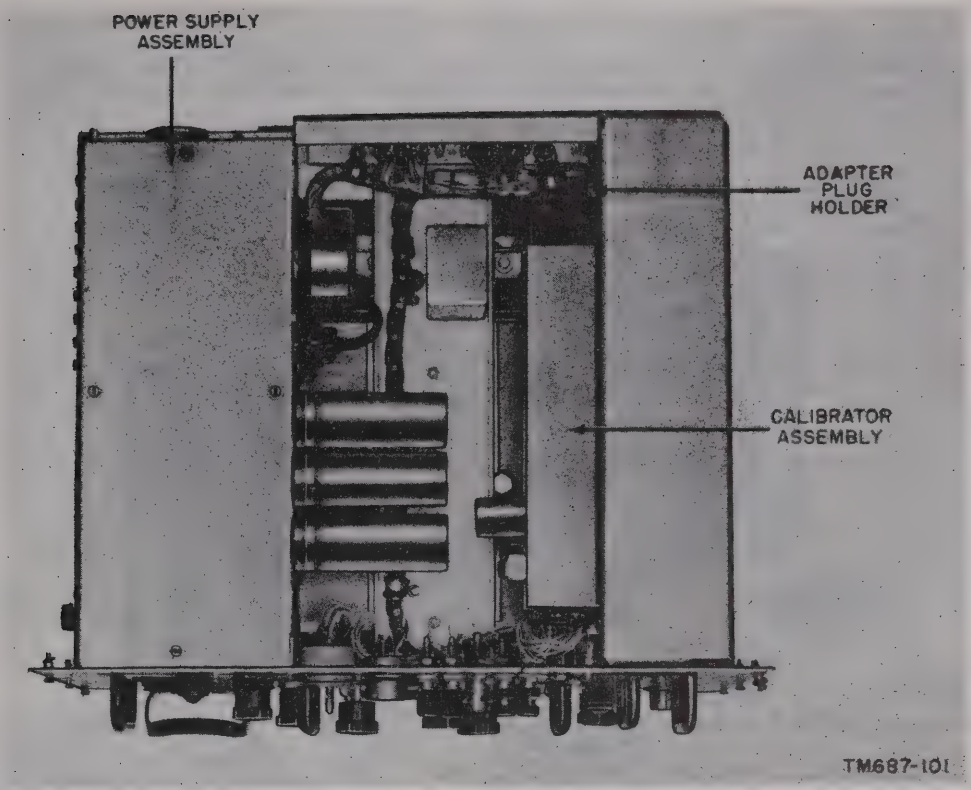

Figure 23. Radio Receiver R–417/TRC, bottom view.

dex line on the OSC dial. The receiver AFC control, which is used for manual control of the afc motor, is located at the lower left of the front panel.

20. Description of Amplifier-Converter AM–913/TRC (fig. 11)

a. General. Amplifier-Converter AM–913/TRC is a plug-in unit that is used in the receiver for the B-band frequency range, 100 to 225 mc. This tuner consists of a tuned rf amplifier, a mixer, and a local-oscillator stage. The afc motor for afc control of the oscillator frequency also is contained in the receiver B-band rf tuner.

b. Front Panel.

(1) Two handles on the front panel of the receiver B-band rf tuner are used to remove the tuner from the receiver or from the tuner case. Cam-lock fasteners secure the front panel of this tuner to the receiver or to the tuner case in which it is stored.

(2) At the center of the front panel is the RF AMP control and the associated RF AMP dial (fig. 94). This control tunes the rf amplifier and oscillator stages of the tuner. The INDEX control, located at the upper left of the front panel, is used to adjust the index line on the RF AMP dial. The receiver AFC control, which is the manual control for the afc motor, is located at the lower left of the front panel.

21. Description of Interconnecting Box J–532/U (figs. 24 and 25)

The interconnecting box is rectangular in shape and has a web-carrying strap. The top of the interconnecting box is secured by 10 screws. The two sides of the interconnecting box have OUTPUT connectors and connector covers 1 through 6 (figs. 24 and 25). The INPUT connector, the INPUT connector cover, and the GND binding post are on the front panel of the interconnecting box. The rear of

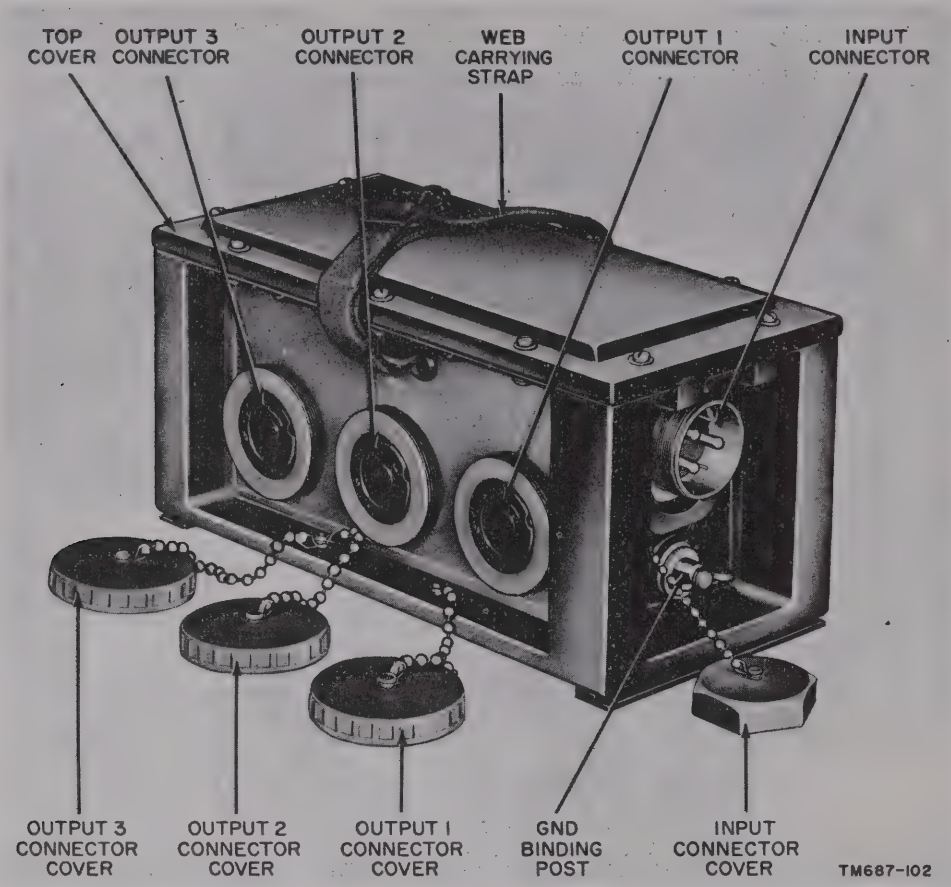

Figure 24. Interconnecting Box J–532/U, front oblique view.

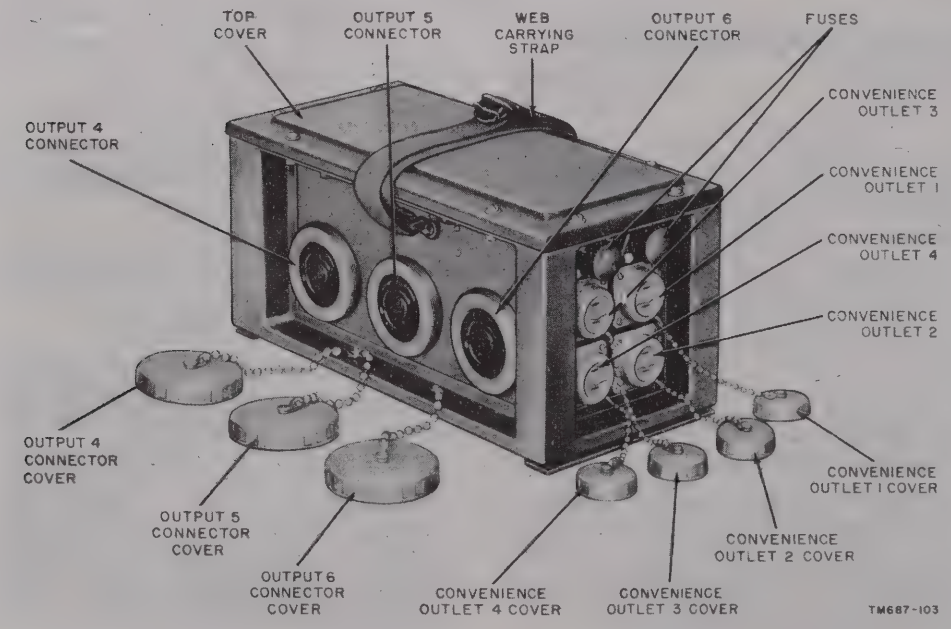

Figure 25. Interconnecting Box J–532/U, rear oblique view.

the interconnecting box has four convenience outlets, outlet covers, and two fuses. A link connection inside the interconnecting box is used to change the connections of the interconnecting box for operation from either a 115-volt or a 230-volt source of power.

22. Description of Switch Box SA–331/U (figs. 26 and 27)

The switch box is almost square in shape and has a web-carrying strap. It is secured to its transit case by six captive screws on the front of the switch box and eight captive screws on the rear. The POWER SUPPLY switch is on the front of the switch box (fig. 26). This switch connects the switch box to

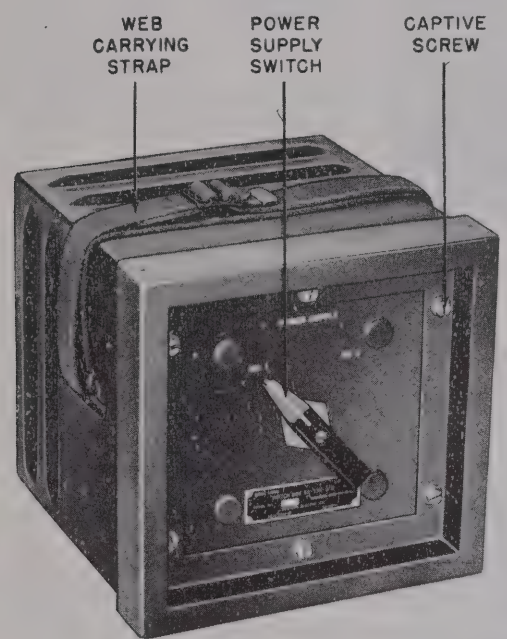

Figure 26. Switch Box SA–331/U, front view.

power source No. 1 or power source No. 2. On the rear of the switch box (fig. 27) are the INPUT connectors and INPUT connector covers Nos. 1 and 2, and OUTPUT connector and OUTPUT connector cover, and a GND binding post.

23. Description of Wattmeter ME–82/U (fig. 28)

Wattmeter ME–82/U is rectangular in shape and has a carrying handle. An input connector is mounted on the front side of the wattmeter. A meter and low-frequency correction chart are mounted on the top side of the wattmeter. Wattmeter ME–82/U is used to measure the rf output power of the radio transmitter.

24. Description of Cables and Connectors

a. Electrical Power Cable Assembly CX–2251/U (fig. 28). This cable assembly is a heavy duty, three-conductor power cable, approximately 150 feet long, which is used to connect Switch Box SA–331/U to Interconnecting Box J–532/U. This cable assembly has a waterproof male connector at one end that connects to the switch box and a waterproof female connector at the other end that connects to the interconnecting box. Metal tags on the cable assembly give the cable nomenclature and indicate the components that the cable assembly interconnects.

b. Electrical Power Cable Assembly CX–2254/U (fig. 28). This cable assembly is a three-conductor power cable, approximately 10 feet long, which connects the source of ac power to Switch Box SA–331/U. This cable assembly has a three-terminal, waterproof female connector connecting the switch box and three 3/8-inch spade lugs to the power source. There are nomenclatured metal tags on the cable assembly indicating the components that the cable assembly interconnects. Two of these cables are provided for connection to two different power sources (fig. 86).

c. Radio Frequency Cable Assembly CG–718/U (fig. 28). This cable assembly is a coaxial cable, approximately 5 feet long, and is used to connect the output of the radio transmitter to Wattmeter ME–82/U. This cable assembly is equipped at each end with Plug Connector UG–707/U. Metal tags on the cable assembly give the cable nomenclature and indicate the components that the cable assembly interconnects.

d. Electrical Power Cable Assembly CX–2256/U (fig. 29). This cable assembly is a three-conductor power cable, approximately 8 feet long; it connects the radio receiver to autotransformer TF–167/TRC. This cable assembly has a three-terminal, waterproof, center-pin type connector at the end that connects to the receiver, and a waterproof, four-terminal male connector at the end that connects to the transformer. Metal tags on the

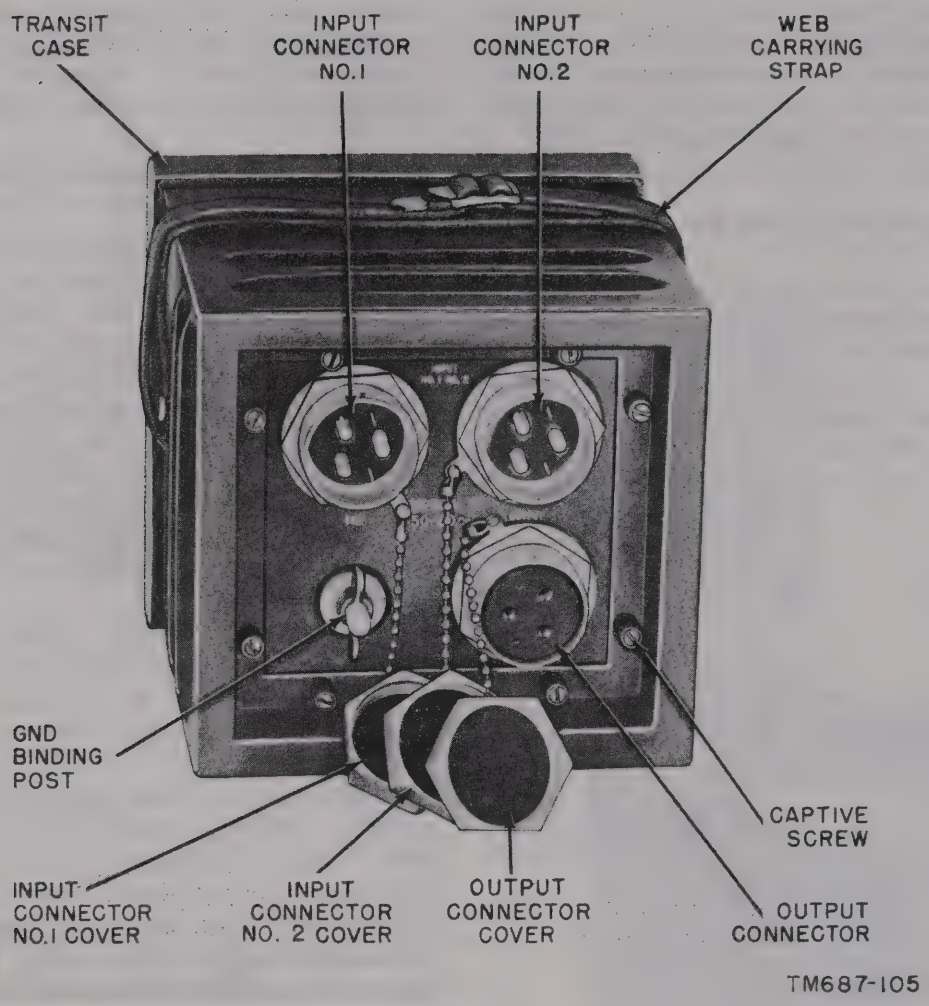

Figure 27. Switch Box SA–331/U, rear view.

cable assembly give the cable nomenclature and indicate the components that the cable assembly interconnects.

e. Electrical Special Purpose Cable Assembly CX–2253/U (fig. 29). This cable assembly is a 19-conductor power cable, approximately 4 feet long, which is used to connect the radio transmitter to Power Supply PP–685/TRC. This cable assembly contains a 19-terminal female connector at the end that connects to the transmitter, and a 19-terminal male connector at the end that connects to the power supply. Metal tags on the cable assembly give the cable nomenclature and indicate the components that the cable assembly interconnects.

f. Electrical Power Cable Assembly CX–2258/U (fig. 29). This cable assembly is a three-conductor power cable, approximately 8 feet long, that connects Power Supply PP–685/TRC to autotransformer TF–167/TRC. This cable assembly has a waterproof, three-terminal female connector at the end that connects to the power supply, and a waterproof, four-terminal male connector at the end that connects to the autotransformer. Metal tags on the cable assembly give the cable nomenclature and indicate which components the cable assembly interconnects.

g. Electrical Power Cable Assembly CX–2257/U (fig. 29). This cable assembly is a four-conductor power cable, approximately 10 feet long, that connects Interconnecting Box J–532/U to autotransformer TF–167/TRC. This cable assembly has a four-terminal, waterproof female connector at the end that connects to the autotransformer, and a waterproof,

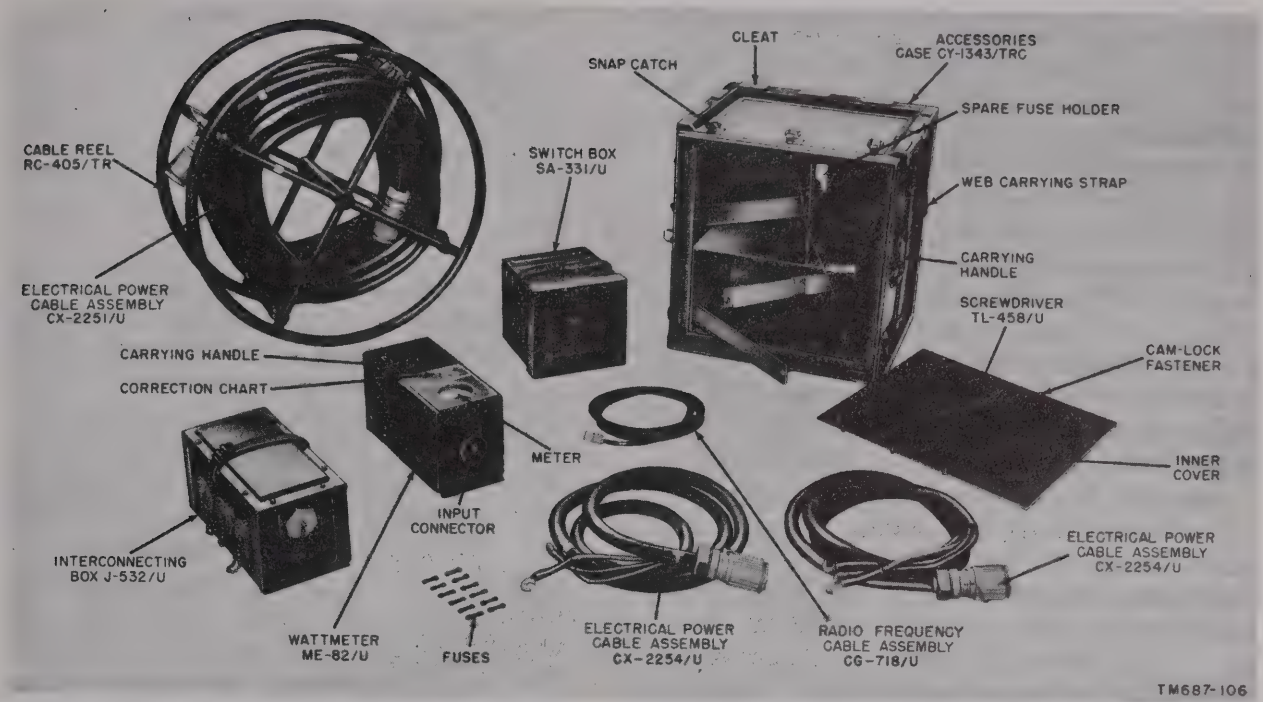

Figure 28. Power Accessories Kit MK-122/TRC.

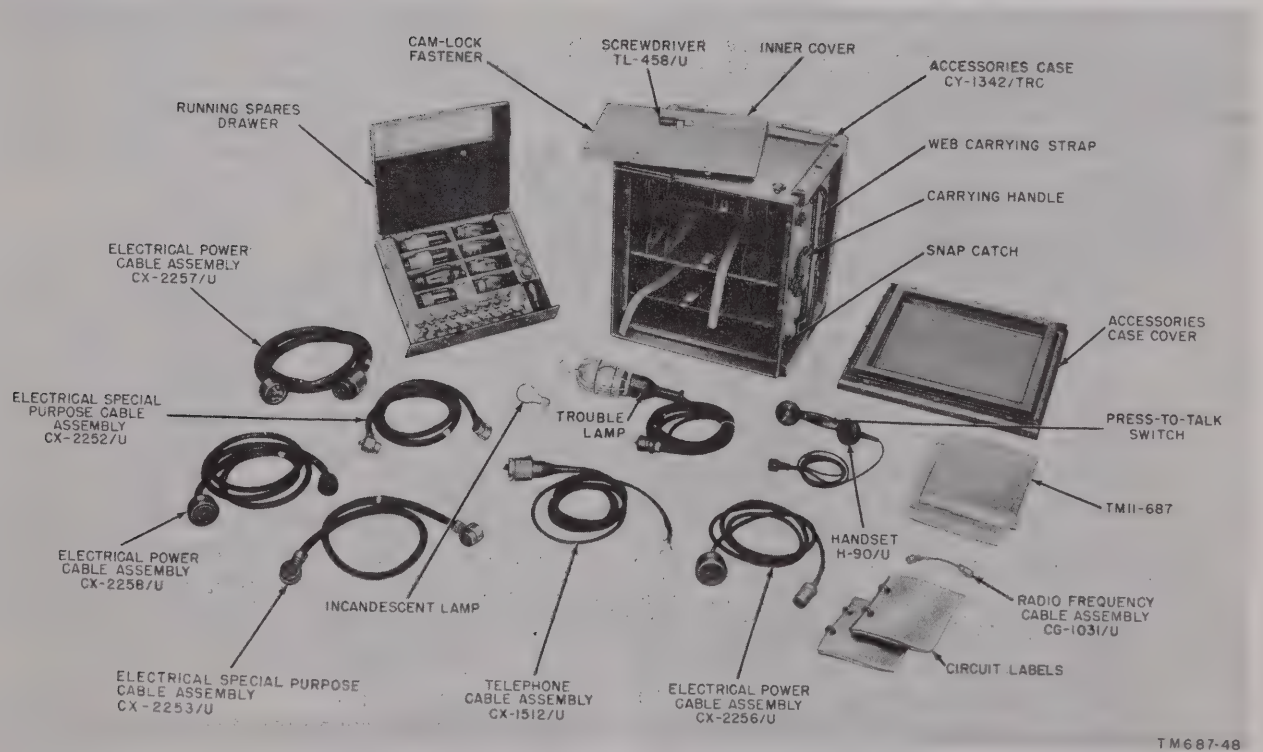

Figure 29. Accessory Kit MK-133/TRC.

four-terminal male connector at the end that connects to the interconnecting box. Metal tags on the cable assembly give the cable nomenclature and indicate which components the cable assembly interconnects.

h. Electrical Special Purpose Cable Assembly CX–2252/U (fig. 29). This cable assembly is a nine-conductor cable, approximately 6 feet long, which is used to connect the radio transmitter to the radio receiver. This cable assembly has a non-terminal male connector at each end. Metal tags on the cable assembly give the cable nomenclature and indicate the components that the cable assembly interconnects.

i. Radio Frequency Cable Assembly CG–1031/U (fig. 29). This cable assembly is a 6-inch length of coaxial cable that is used to interconnect the CAL OUT and ANTENNA jacks on the radio receiver during the starting procedure. This cable assembly has a UG–709/U connector at each end. A metal tag on the cable assembly gives the cable nomenclature.

j. Radio Frequency Cable Assembly CG–1030/U (fig. 15). This cable assembly is an 80-foot length of Radio Frequency Cable RG–14A/U that connects either the transmitter or the receiver to its respective antenna. Each end of the cable assembly has a Plug Connector UG–707/U. Metal tags on the cable assembly give the cable nomenclature and indicate the components that the cable assembly interconnects.

k. Maintenance Cables.

(1) *Electrical Special Purpose Cable Assembly CX–2406/U* (2 ft 6 in.). This cable assembly is a 21-conductor cable with a 21-pin connector at each end. It is used to permit operation of a plug-in assembly after removal from the transmitter or receiver. A test-pin block, which facilitates testing, is located about 6 inches from one of the 21-pin connectors.

(2) *Electrical Special Purpose Cable Assembly CX–2420/U* (3 ft 0 in.). This cable assembly is a 9-conductor cable with a 9-pin connector at one end and a 9-pin terminal board at the other. It is used to facilitate connections to the RECEIVER jack of the transmitter.

(3) *Electrical Special Purpose Cable Assembly CX–2473/U* (2 ft 6 in.). This cable assembly is a 15-conductor cable with a 15-pin connector at each end. It is used to permit operation of the low-voltage plug-in assembly after its removal from Power Supply PP–685/TRC.

(4) *Radio Frequency Cable Assembly* CG–789A/U (2 ft 6 in.). This cable assembly is a 30-inch length of Radio Frequency Cable RG–59A/U with a coaxial-cable connector at each end. It is used to extend the coaxial-cable leads to the plug-in assemblies to permit their operation after removal from the receiver or transmitter.

(5) *Radio Frequency Cable Assembly CG–1103/U* (2 ft 6 in.). This cable assembly is a 30-inch length of Radio Frequency Cable RG–59A/U with a coaxial connector at each end. It is used to extend if. connections to the receiver rf tuners to permit their operation after removal from the receiver.

(6) *Radio Frequency Cable Assembly CG–1091/U* (2 ft 6 in.). This cable assembly is a 30-inch length of Radio Frequency Cable RG–58C/U with a coaxial connector at each end. It is used to extend the rf connection to the receiver rf tuners to permit their operation after removal from the receiver.

(7) *Mounting of cables.* The cables described in (1) through (6) above, as well as Radio Frequency Cable Assembly CG–718/U (*c* above) are mounted on an aluminum frame (fig. 30) that fits into the right-hand side of Accessories Case CY–1343/TRC (fig. 28). Two each of Radio Frequency Cable Assembly CG–789A/U and Electrical Special Purpose Cable Assembly CX–2406/U and one each of all the other cables are mounted on the frame.

Figure 30. Maintenance cable holding frame for Accessories Case CY–1343/TRC, left and right side views.

(Contained in separate envelope.)

25. Description of Other Accessories

a. Handset H–90/U (figs. 21 and 29). Handset H–90/U is a lightweight telephone handset that the radio-set attendant uses to talk over the order-wire channel. As shown in figure 21, the handset is supplied with a 6-foot length of cable with a connector at the end that is attached to the HANDSET connector on the front panel of the receiver. A press-to-talk switch on the handset (fig. 29) is held in the press position while talking over the order wire.

b. Accessories Cases CY–1342/TRC (figs. 29 and 31). There are two types of accessory cases. One is a metal case designed to hold the radio equipment accessories and the running spares for Radio Set AN/TRC–24 (fig. 29). It has web-carrying straps and carrying handles on the sides of this case. Also the case has an accessories case cover held in place by snap catches and an inner cover held in place by cam-lock fasteners. A screwdriver is mounted on a clamp on the outside of the inner cover. There are cleats on the top and bottom of the accessories case so that stacking of this accessories case with other cases will be possible. The other case, Accessories Case CY–1342/TRC, is shown in figure 31. This type provides facilities for cable storage so that the cable connectors are secured to the case to prevent damage in transit. In the earlier type case, the cable connectors are not secured. For further details on this case, refer to paragraph 72.

c. Accessories Case CY–1392/G (fig. 14). This is a metal case designed to hold the accessories for Mast AB–235/G. It has carrying handles on its sides. The top of the case is hinged and held in place with snap catches. An antenna-erection instruction chart is mounted on the inside of the top cover.

d. Accessories Case CY–1344/TRC (fig. 10). This is a metal case designed to hold six of the band-pass filters. Web carrying straps and carrying handles are on the side of the case. This case has an accessories case cover, which is held in place by snap catches. Metal runners on the inside of the case position the band-pass filters in the case. The band-pass filters are held in place by cam-lock fasteners.

e. Antenna Reflector Case CY–1385/TRC (fig. 16). This is a metal case designed to hold the two antenna reflectors and the A frame. The case consists of two halves that are positioned together by means of positioning pins. The two halves of the case are held together by means of snap catches. Carrying

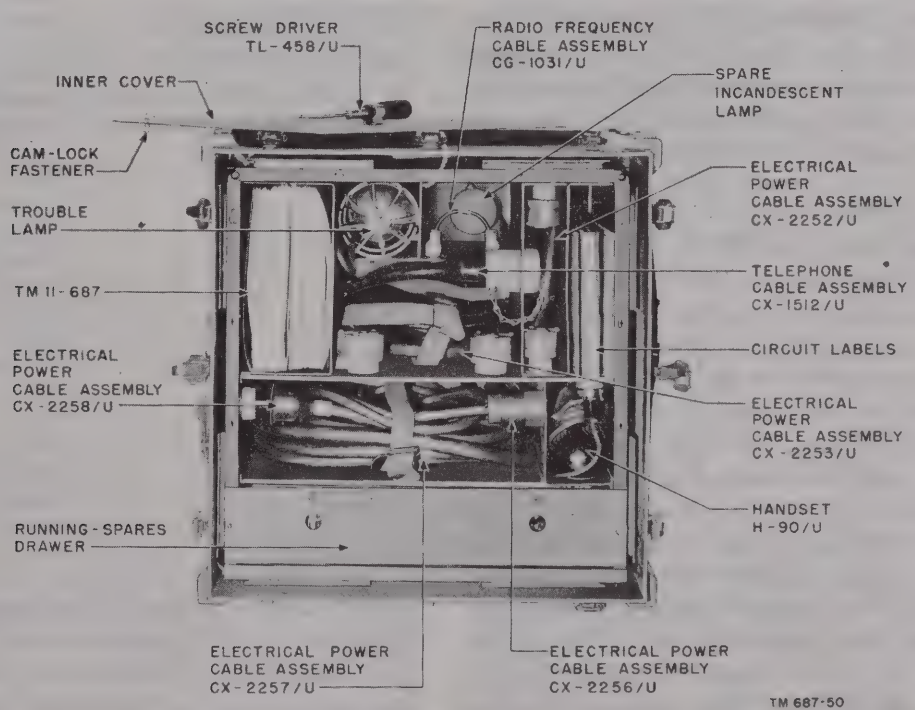

Figure 31. Arrangement of contents in new type Accessories Case CY–1342/TRC.

handles are mounted on the sides of the case.

f. Antenna Reflector Support Case CY–1387/TRC (fig. 16). This is a metal case designed to hold Antenna Reflector Support AB–325/TRC, antenna reflector guys, wrenches, and antenna cable clamps. It has a cover, held in place by snap catches, and carrying handles on the side. Bars on the inside of this case help to position the antenna reflector support in the case.

g. Antenna Case CY–1371/TRC (fig. 17). This is a metal case designed to hold two Antennas AS–639/TRC and two Adapter Connectors UG–643/U. The case consists of two halves, each of which contains one disassembled Antenna AS–639/TRC. The two halves of the case are positioned together by positioning pins and held together by snap catches. The carrying handles are secured to the sides of the case.

h. Antenna Case CY–1370/TRC (fig. 17). This is a metal case designed to hold two Antennas AS–640/TRC and two Adapter Connectors UG–643/U. The case consists of two halves, each of which contains one disassembled Antenna AS–640/TRC. The two halves of the case are held together by pins and locked with snap catches. The case has carrying handles on the sides,

i. Electrical Standardized Components Case CY–1338/TRC (fig. 11). This is a metal case designed to hold one transmitter rf tuner (either Radio Frequency Amplifier AM–912/TRC or Radio Frequency Amplifier-Multiplier AM–915/TRC and one receiver rf tuner (either Amplifier-Converter AM–913/TRC or Amplifier-Converter AM–914/TRC). The rf tuners, when not being used in the transmitter and the receiver, are stored in this case. It is made with web-carrying straps and carrying handles. The cover is held in place by snap catches. Metal runners on the inside of the case position the rf tuners in the case. The rf tuners are held in the case by cam-lock fasteners.

j. Ground Rod MX–148/G and Clamp TM–106. The radio set must be securely grounded to protect against lightning and other high voltages. A ground rod and clamp are provided with the equipment for this purpose. The ground rod is a length of metal that is driven into the ground. The clamp is attached to the ground rod and provides a grounded binding post for the radio set.

26. Running Spares

a. General. A group of running spares is provided with each radio set. Spares are provided for all normally expendable items such as tubes, fuses, and pilot lamps. The running spares for the transmitter, receiver, power supply, and autotransformer TF–167/TRC of Radio Set AN/TRC–24 are stored in a drawer in Accessory Kit MK–133/TRC (fig. 29). Running spares for other parts of the radio set are stored in Wattmeter ME–82/U and in Accessories Case CY–1343/TRC. Running spares, which are supplied with Radio Set AN/TRC–24, are outlined in *b* through *g* below.

b. Running Spares in Running Spares Drawer (fig. 32).

Quantity	Item
1	Capacitor, .1 μf, 200 v.
1	Crystal rectifier 1N21B.
1	Crystal rectifier 1N69.
6	Fuses, .375-ampere.
6	Fuses, ½-ampere.
12	Fuses, 1-ampere.
6	Fuses, 1.5-ampere.
6	Fuses, 3-ampere.
6	Fuses, 5-ampere.
6	Fuses, 10-ampere.
12	Fuses, 20-ampere.
3	Lamps, incandescent, .15-ampere, 6.3 v (GE #47).
1	Resistor, 130-ohm, 2-watt
1	Tube 0A3.
3	Tubes 4X150A.
2	Tubes 4X150G.
2	Tubes 5R4WGY.
6	Tubes 5654/6AK5W.
6	Tubes 5670.
1	Tube 5725/6AS6W.
1	Tube 5726/6AL5W.
2	Tubes 5751.
1	Tube 5933.
4	Tubes 5998.
2	Tubes 6AN5.
1	Tube 6AV6.
5	Tubes 6J4.
4	Tubes 6CB6.
1	Tube 836.

c. Running Spares in Wattmeter ME–82/U. Two spare 1N21B crystal rectifiers are stored in the wattmeter. These spare crystal rectifiers are held by spring clamps on the inside of the wattmeter (fig. 253).

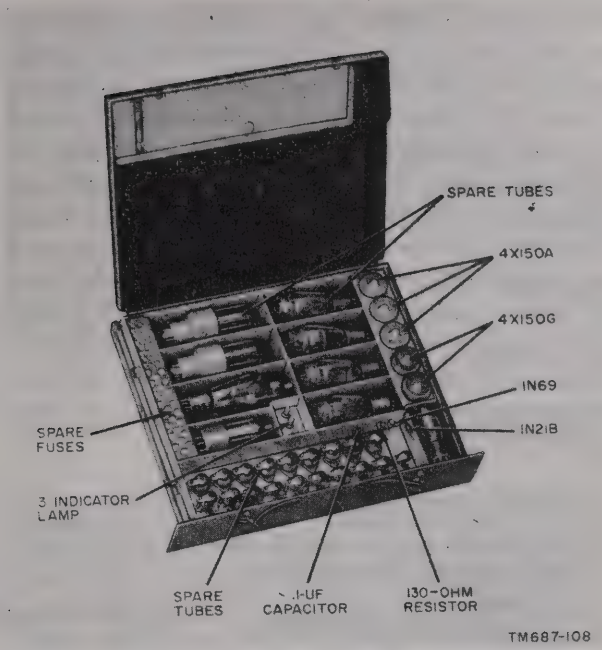

Figure 32. Running spares drawer.

d. Running Spares in Accessories Case CY–1343/TRC (fig. 28). Twelve spare 10-ampere fuses are contained in this accessories case. These spare fuses are held by spring clamps in the spare fuse holder on the inside of this case.

e. Running Spares in Accessories Case CY–1342/TRC (fig. 29). A spare 50-watt, 120-volt incandescent lamp is contained in this accessories case, and is held by a spring clamp on the upper shelf of the case. A spare incandescent lamp for the newer type accessory case is shown in figure 31.

27. Circuit Labels

The circuit labels of Radio Transmitter T–302/TRC, Power Supply PP–685/TRC, Radio Frequency Amplifier AM–912/TRC, and Radio Frequency Amplifier-Multiplier AM–915/TRC are bound in a book that is stored in Accessory Kit MK–133/TRC (fig. 29). The circuit labels of Radio Receiver R–417/TRC, Amplifier-Converter AM–913/TRC, and Amplifier-Converter AM–914/TRC are contained in another book which also is stored in Accessory Kit MK–133/TRC. The circuit labels that apply to autotransformer TF–167/TRC, Interconnecting Box J–532/U, and Switch Box SA–331/U are in the respective component cases. They are fastened under spring clamps at the inside bottom of the cases. Remove the chassis to get them.

28. Electrical Power Requirements

a. Radio Set AN/TRC–24 requires a single-phase, alternating-current (ac) input.

b. The radio set draws 1.10 kilovolt-amperes (kva) with a power factor of 96 percent at a line voltage of 115 volts. The applied voltage must remain between 95 and 130 volts or between 190 and 260 volts and have a frequency between 50 and 60 cps. The tabel below lists the power requirements for each radio set using different sources of power, with either 115-volt or 230-volt inputs. The power drains are given in kva and kilowatts (kw).

Source of power	Input voltage (ac)	Power requirements					
		Radio Set AN/TRC–24		Radio Terminal Set AN/TRC–35		Radio Relay Set AN/TRC–36	
		kva	*kw*	*kva*	*kw*	*kva*	*kw*
Gasoline Engine Generator Set PU–286/G.	115	1.10	1.05	1.10	1.05	2.20	2.10
	230	1.10	1.05	1.10	1.05	2.20	2.10
Power line	115	1.10	1.05	1.10	1.05	2.20	2.10
	230	1.10	1.05	1.10	1.05	2.20	2.10

29. Additional Equipment Required

Equipments *not* supplied as a part of Radio Set AN/TRC–24 but which are required for its operation are listed in *a* and *b* below.

a. Voltmeter ME–30A/U is required for making noise measurements on the radio set. This meter is used in conjunction with the resistor and capacitor in the running spares drawer (par. 26*b*).

b. Frequency Meter AN/URM–81 or equi-

valent is required while operating the radio set without afc. The radio set will be operated without afc when connected in a system with British Wireless Set C–41 (par. 122).

30. Differences in Components of Radio Sets

Differences exist in certain assemblies of Radio Transmitter T–302/TRC, Radio Receiver R–417/TRC, and Power Supply PP–685/TRC. Modifications have been made in other units as indicated in the chart below. Although there are design differences in the units, they are completely interchangeable. These differences have been noted on the partial diagrams and on the main schematic diagrams. The text, also, points out certain differences where applicable. Since the units are interchangeable, references to modified sets by serial numbers are not significant; that is, a unit may have been substituted for the original *after* it left the manufacturer. Accordingly, the modified units must be identified by type. A list of the various types of units used in Radio Receiver R–417/TRC is contained in the table in paragraph 317*i*. The chart below lists the number of types of components that have been made, together with the applicable illustrations.

Name of component	Types	Fig. No.
Radio Transmitter T–302/TRC (fig. 268).	----------	6
Main assembly (front panel and chassis).	1	6
Base-band amplifier and metering plug-in assembly.	4	8
Rf exciter plug-in assembly-----	4	7
Afc unit (60-cps modulator) plug-in assembly.	3	8
Other plug-in assemblies-------	1	8, 9
Radio Frequency Amplifier AM–912/TRC (fig. 269).	1	11
Radio Frequency Amplifier-Multiplier AM–915/TRC (fig. 270).	1	11
Band-pass filters (fig. 271)----------	1	10
Power Supply PP–685/TRC (fig. 275).	4	12, 13
Radio Receiver R–417/TRC (fig. 276).	----------	21
Main assembly (front panel and chassis).	2	21
Calibrator plug-in assembly (fig. 277).	3	23
Base-band amplifier and order-wire plug-in assembly.	8	22
Limiter-discriminator-afc plug-in assembly.	5	22
Other plug-in assemblies-------	1	21, 22, 23
Amplifier-Converter AM–913/TRC (fig. 278).	3	11
Amplifier-Converter AM–914/TRC (fig. 279).	3	11
Power Accessories Kit MK–122/TRC	2	28
Accessory Kit MK–133/TRC-------	2	29
Other components----------	1	18, 19, 20, 24, 25, 26, 27

CHAPTER 2

INSTALLATION

Section I. SYSTEM PLANNING CONSIDERATIONS

31. Capabilities of Radio Set AN/TRC–24

Radio Set AN/TRC–24 is a high-quality radio set that, when properly sited, will meet long-distance circuit standards with as many as eight jumps and as many as twelve 4-kc channels. The radio set can be continuously tuned and automatically stays tuned to a frequency to which it has been adjusted. R-f transmitter power is 50 to 120 watts (approx. 10 watts on low power). The set can be transported easily because single packages (except the associated primary power unit) weigh from 55 to 120 pounds.

a. Frequency Range. Radio Set AN/TRC–24 has four contemplated frequency bands, with a transmitter and receiver rf tuner for each band: A-band, 50 to 100 mc; B-band, 100 to 225 mc; C-band, 225 to 400 mc; and D-band, 400 to 600 mc. The A and D bands are now being developed and only the B and C bands are available for use at the present time. The B-band provides 250 channels that cover the range of 100.25 to 224.75 mc in .5-mc steps. The C-band provides 175 channels that cover the range of 225.5 to 399.5 mc in 1-mc steps. The receiver intermediate-frequency bandwidth for both B and C bands (between half-power points (3 decibels (db) down)) is about .7 mc; between one-thousandth-power points (30 db down), 2.2 mc. The rated frequency stability is $\pm$.02 percent for normal temperature variations.

b. Antennas. For the 100- to 400-mc range, the antenna consists of a pair of parallel dipoles in front of a screen-mesh plane reflector. To save weight, both a transmitting and a receiving antenna, for use at one end of one radio jump, are mounted on a crossarm on a single 45-foot mast. The antennas are comparatively broad-band: the 100- to 225-mc band is covered in only three dipole adjustments; the 225- to 400-mc band in only two. Each antenna (pair of dipoles) may be set independently for horizontal or vertical polarization.

c. Power. Radio Set AN/TRC–24 operates only on 95- to 130-volt or 190- to 260-volt, 50- to 60-cycle, ac input power.

d. Base Band. The radio set provides twelve 4-kc traffic channels plus an order wire, if used with Telephone Terminal AN/TCC–7 and associated equipment. If used with Telephone Terminal AN/TCC–3 and associated equipment, the radio set provides four 4-kc traffic channels plus an order wire. The base-band range of frequencies is from .25 to 68 kc. The preemphasis in the transmitter produces fm up to 20 kc, and modified phase modulation from 20 to 68 kc; complimentary deemphasis in the receiver restores the base-band to a flat overall characteristic from transmitter input to receiver output.

e. Reduction of Spurious Effects. Radio Set AN/TRC–24 may be operated with a band-pass filter in the output of the transmitter and must be operated with a band-pass filter in the input to the receiver to reduce spurious outputs and responses. Each filter causes a loss of approximately 1 db at the operating frequency and a loss of about 45 db at all frequencies more than 21 mc from the operating frequency in the B-band, and 30 mc in the C-band. Because of these filters, considerable flexibility for changing frequency assignments is possible,

thus saving time in setting up circuits to meet changing tactical conditions.

f. Test and Ringing Signals. A 1,000-cps test signal is provided in the transmitter for radio line-up and for test purposes. A 1,600-cps ringing signal facility is built into the receiver, with cross-feed to the associated transmitter for the opposite direction of transmission. This signal is used for signaling stations in both directions.

g. Alarm and Squelch. A local alarm in the transmitter indicates that there is no rf signal from the local transmitter; an alarm in the local receiver indicates either no incoming rf signal or failure of the local receiver. When the receiver alarm is operated, the receiver output is muted or squelched.

32. General Propagation Characteristics

a. Radio Set AN/TRC–24 operates in the frequency range from 50 to 600 mc. The range from 30 to 300 mc is called the very-high-frequency (vhf), and the range from 300 to 600 mc is the lower part of the ultra-high-frequency (uhf) range. The properties and phenomena associated with radio waves in the vhf band and the lower part of the uhf band are similar; therefore, the term vhf will be used to refer to the band of frequencies from 50 to 600 mc.

b. Radio propagation in the vhf band is confined to ground waves (waves that travel near the earth's surface). Only this type of propagation is considered in this manual. Sky-wave transmission, by means of reflections from the ionosphere, sometimes occurs in the vhf band (particularly at frequencies from 50–100 mc), but such instances are likely to be infrequent and generally unpredictable. Because ground waves attenuate rapidly with distance, useful transmissions in the vhf band between radio sets is generally limited to relatively short distances (25–35 miles), unless exceptionally good antenna sites on high hills are available at both ends of the path. An exception to this rule is sometimes met where very high obstacles are located at the approximate center of a transmission path (par. 34*c*).

c. The distance, range, and performance estimates given in this manual are based entirely on standard propagation. Recent experience in war theaters and elsewhere has indicated that meteorological conditions, such as temperature and humidity of the troposphere (par. 33), sometimes give rise to what is termed guided propagation. This phenomenon may greatly extend the distance over which usable field intensities are received. Such conditions are most frequently encountered where radio sets are located near the shore of an ocean or other large body of water and may be present for either long or short periods of time.

33. Wave Propagation Phenomena

a. General. The path of travel for radio waves in the vhf band is the troposphere. The troposphere is the layer of atmosphere directly adjacent to the earth's surface. It extends upward approximately 6 miles. The temperature normally decreases about 10° C per mile, with increasing altitude; the temperature at the upper boundary is about —50° C. Above the troposphere is the stratosphere, in which the temperature remains relatively constant at approximately —50° C. Because of changes in moisture content and temperature of the troposphere, certain wave propagation phenomena, such as reflection and refraction, occur. A phenomenon known as diffraction, which is the bending of radio waves around obstacles, also may take place in the troposphere where conditions are suitable.

b. Refraction. Propagation of radio waves in the troposphere is materially influenced by the distributions of temperature, pressure, and water vapor. The variation of these quantities with height is expressed conveniently by the index of refraction, which decreases linearly with height in a so-called standard atmosphere. (The condition most nearly approximated in the temperature zone has been accepted as the standard atmosphere.) The radio energy emitted from a transmitter antenna is a wave spreading out in three dimensions, which may be represented by a series of concentric spherical wave fronts or by a system of radial lines called rays (fig. 33). The index of refraction normally decreases with height; therefore, the upper portions of these wave fronts move with higher velocities than the lower portions, and the wave path may be represented by rays curved slightly downward toward the earth. As a result, the distance to the radio horizon

is 15 percent greater than the geometrical line-of-sight distance from the transmitter to the horizon (fig. 33). This curvature of the rays by the atmosphere is called refraction.

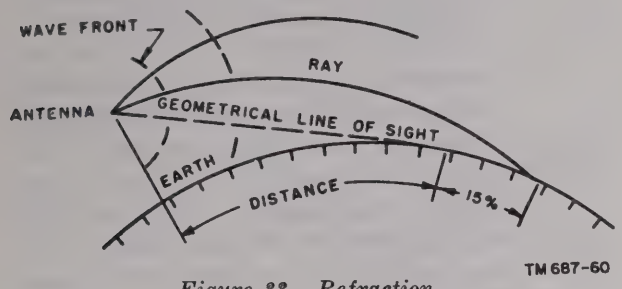

Figure 33. Refraction.

c. Reflection. Over a line-of-sight path, the radio wave at the receiver R (fig. 34) is the vector sum of the radiations arriving by way of both the direct and reflected ray paths. The contribution from the reflected ray path depends primarily on how the earth or sea acts as a reflecting body. Over water and salt flats, for instance, the reflection is essentially 100 percent. Over land areas with gentle rolling country and some vegetation, the reflection is only approximately 10 percent. Because the angle of reflection to be taken into consideration in radio-relay siting is very small, consideration need not be given to polarization effects—that is, whether the antenna is horizontally or vertically polarized (par. 35). For the same reason, the phase lag of the reflected wave with respect to the incident wave at the point of reflection is, for all practical purposes, 180°. Although the angle of reflection is small, the distance traveled by the reflected ray is greater than that of the direct ray, and an additional phase lag therefore exists.

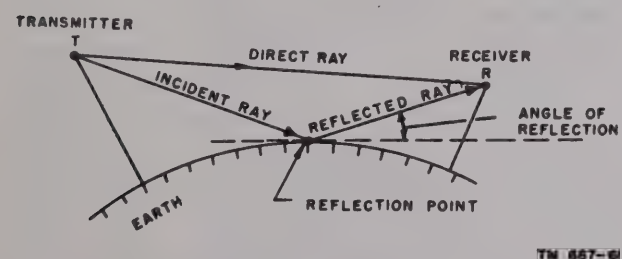

Figure 34. Reflection.

d. Diffraction. The mechanism by which radio waves curve around edges and penetrate into the shadow region behind an opaque obstacle is called diffraction. This effect is important because it generally allows a considerable extension of the length of a jump in certain special cases (par. 34*c*) and allows a limited extension of the line-of-sight path length in other cases (fig. 35).

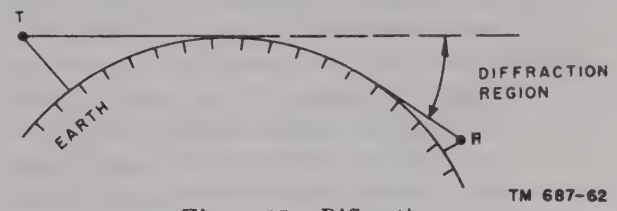

Figure 35. Diffraction.

e. Results of Wave Propagation Phenomena. As the receiving antenna is raised above ground level (fig. 35), the received signal strength rapidly increases because of diffraction until the grazing line of sight is reached (fig. 36). Above the grazing line of sight, the direct and reflected waves interfere with each other and result in maximum and minimum patterns called Fresnel patterns. The first maximum occurs when the difference in path length between the direct and reflected wave is one-half wavelength (*c* above) because the reflected signal undergoes a 180° phase reversal at the reflecting point. The succeeding maximums are odd multiples of one-half wavelengths. The magnitudes of the maximum and minimum fields depend on the magnitude of the reflection coefficient.

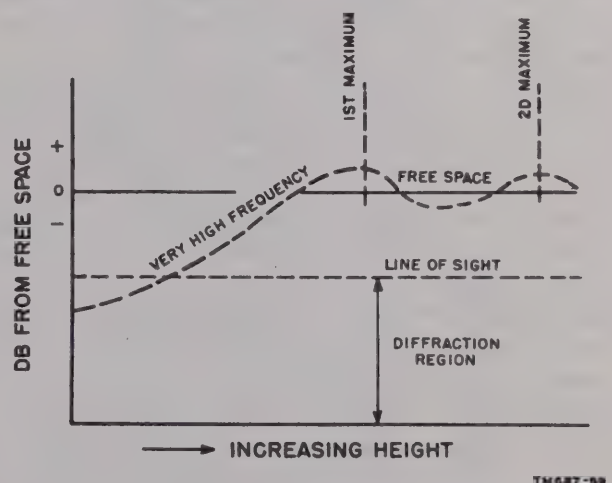

Figure 36. Results of wave propagation phenomena.

34. Propagation of Radio Waves in Vhf Band

a. Over Smooth Earth or Water.

(1) Under the ideal condition of smooth earth, the intensity of the transmitted signal, beyond the first mile or so,

diminishes in a regular and uninterrupted manner as the distance from the transmitter is increased. Similar propagation characteristics are found over water, because the surface is smooth enough to approach the ideal.

(2) Figure 37 shows the theoretical relationship between db loss and distance over smooth land for either horizontal or vertical polarization (par. 35) with 45-foot antenna elevations. These curves apply also for sea water when using horizontal polarization. The field intensities obtained in practice will be less than those shown, because of irregularities in terrain, the presence of trees, and other factors that cause the actual conditions to differ from the theoretical. With allowance for these factors, it is possible to calculate the distance range to be expected (par. 46).

b. Over Irregular Terrain.

(1) Propagation characteristics over irregular terrain are in marked contrast with those for smooth earth or sea water. Here, the variation of db loss with distance depends largely on the profile of the terrain between transmitting and receiving antennas. An increase in distance may result in either decreased or increased db loss, depending on the particular topography involved. Substantial changes in db loss may result from relocating stations, even without any change in the distance between them.

(2) Figure 38 shows in profile, an assumed transmission path over hills with values of db loss likely to be encountered at various points along the path. Two facts with regard to transmission in hilly country are emphasized: first, *the choice of antenna sites is very important;* and, secondly, *there is no satisfactory basis for calculating general distance ranges.* Instead, the db loss may be estimated for a given site involving a path of known profile, and thus the selection of antenna sites may be based on the db loss estimated for various available locations. A detailed method for determining db loss over gently rolling

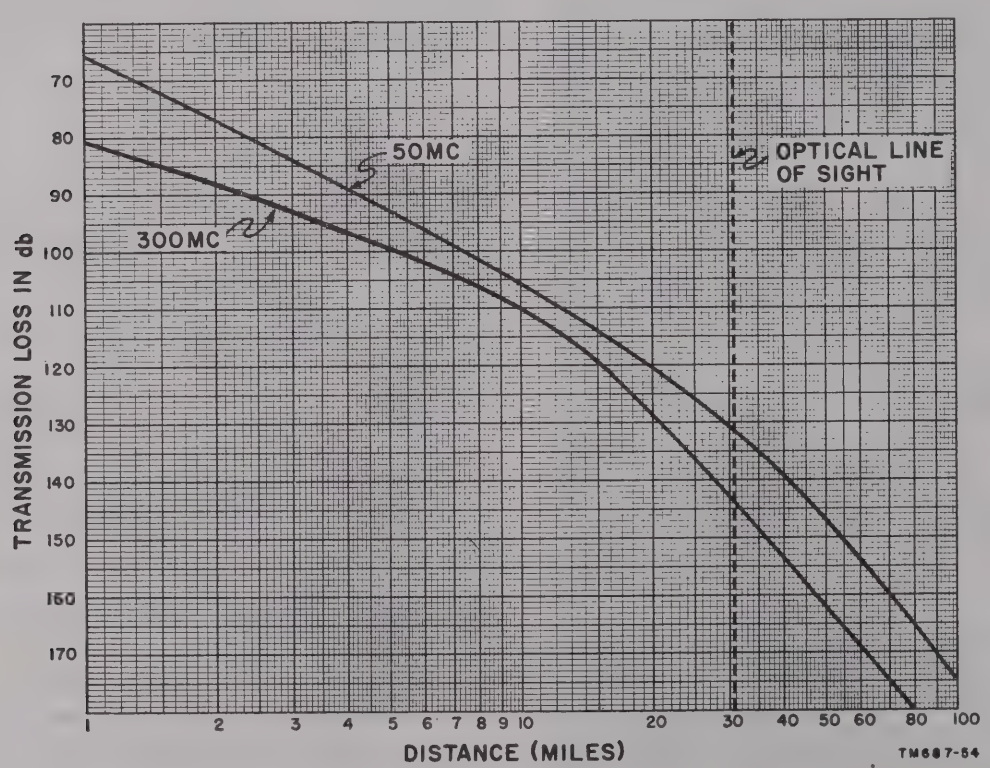

Figure 37. Graph of db loss versus distance over smooth earth.

terrain is given in paragraph 47. A detailed method for determining db loss over rugged terrain is given in paragraph 49.

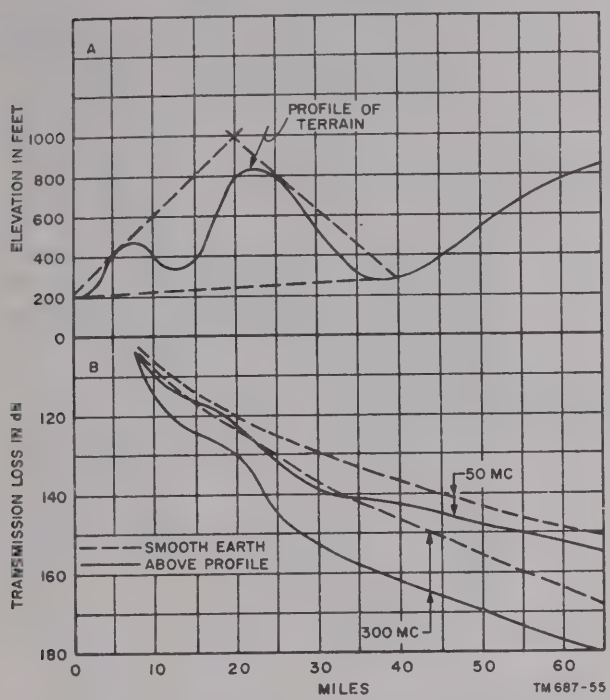

Figure 38. Profile of an assumed transmission path and the associated loss versus distance.

c. Over Very High Obstacles. Recent experiments have indicated that considerable gains in received signal strength above that obtained over a smooth spherical earth may be expected from diffraction over an appropriate obstacle located in the path. Transmission paths that contain a very high obstacle have been spanned with excellent results for distances over 150 miles. Experiments have also shown that for the best use of this diffraction phenomenon, the obstacle should be equivalent to a knife edge, as high as possible, and situated in the approximate center of the transmission path. The radio sets should be placed as far from the obstacle as possible, to prevent excessive attenuation.

35. Polarization

a. General. For practical purposes, in the vhf band, radio waves transmitted from a vertical antenna usually are regarded as being vertically polarized, and those from a horizontal antenna normally are regarded as being horizontally polarized. Either type of polarization may be used for vhf transmission, but the performance of each will be different under certain situations. In all cases, the orientation of the receiving antenna—that is, horizontal or vertical—should be the same as that of the transmitting antenna at the distant station.

b. Advantages of Vertical Polarization. The advantages of vertical polarization for vhf transmission are as follows:

(1) Simple vertical dipole or whip antennas are nondirectional in a horizontal plane. This feature is advantageous when good communication is desired in several directions from a radio set.

(2) Where antenna elevations do not exceed 10 feet, vertical polarization in the 50- to 100-mc band results in a stronger signal than can be obtained with horizontal polarization using antennas of the same height. This difference is negligible, however, when using frequencies higher than 100 mc.

(3) For transmission over sea water, vertical polarization is better than horizontal polarization when antennas are below a certain elevation. This elevation is about 50 feet at 85 mc and lower at the higher frequencies. This means that with ordinary antenna mast heights of 45 feet, vertical polarization is better at frequencies lower than 100 mc. At higher frequencies, there is little if any difference.

(4) From limited observations, it appears that vertical polarization as compared to horizontal polarization is less subject to variations in received field intensity caused by reflections from aircraft flying over the transmission path. This may be important in locations where aircraft traffic is heavy, as at air fields.

c. Advantages of Horizontal Polarization. The advantages of horizontal polarization are as follows:

(1) A simple horizontal antenna pointed east and west, for example, transmits and receives best in north and south directions and performs poorly by

comparison in east and west directions. This inherent directivity is sometimes of advantage as a means of minimizing interference.

(2) Horizontal antennas are less apt to pick up man-made interference, which is ordinarily vertically polarized.

(3) Indications are that when antennas are located in fairly dense forests, horizontally polarized waves usually suffer lower losses than vertically polarized waves, especially in the higher portion of the vhf band. Also, standing-wave effects, which cause relatively large changes in the field intensity of vertically polarized waves for small changes in antenna location among trees or near the edge of a forest, are not so pronounced with horizontal polarization. In very dense jungles, performance generally is poor for both types of polarization.

36. Operational Advantages of Frequency Range From 50 to 600 Mc

Several advantages to be gained by using the frequency range from 50 to 600 mc for communication requirements over short to moderate distances are as follows:

a. Congestion in the frequency range from 3 to 30 mc is relieved.

b. The absence of sky-wave propagation permits frequency assignments to be duplicated in adjacent areas with less likelihood of interference and tends to reduce the chance of interception by the enemy. However, *freedom from interception cannot be safely assumed.*

c. When a successful radio circuit in the frequency range from 50 to 600 mc is once established, a high percentage of reliability is assured even in areas where high atmospheric static prevails.

37. Factors Affecting Transmission in Frequency Range From 50 to 600 Mc

a. Transmission in the frequency range from 50 to 600 mc, in contrast with high-frequency (hf), 3 to 30 mc is favored by the following factors:

(1) Frequencies in the range from 50 to 600 mc are usually free from atmospheric static noise except during local storms.

(2) Signals in the vhf band for line-of-sight transmissions usually are affected only by moisture conditions in the transmission path.

(3) Antennas of one-fourth or one-half wavelength, in the vhf band, are small and more efficient than hf antennas.

(4) Performance of vhf circuits may be improved substantially, except under certain conditions, by raising antennas to moderate elevations above ground. Thus, masts of a height practical for tactical work may be used to good advantage. Higher elevations (using hills for antenna sites) provide further improvement.

(5) Directional antennas for improving transmission in the desired direction are of relatively small dimensions in the upper part of the vhf band and directivity gains equivalent to raising the transmitting power by four times or more are attainable.

(6) Good ground connections for the antennas usually are not essential.

b. Other factors to counteract the advantages listed above are as follows:

(1) Shadow losses introduced by the earth's curvature and by intervening hills are greater than with hf waves.

(2) Trees or dense jungles in the vicinity of the antennas cause more loss at higher frequencies than at lower frequencies.

(3) Fading occurs at times in the vhf band, especially when the radio path is long. Reflections from airplanes in or near the transmission path also can cause severe signal variations.

38. Use of Low-Frequency Ranges

The velocity of propagation of radio waves in the vhf band (par. 33*b*) varies inversely with the index of refraction of the transmission medium. Thus, the radio waves move slightly more rapidly in the upper atmosphere than they do close to the surface of the earth, and the result is a downward bending of the rays or paths of propagation. This bending of rays is greater at 50 mc than it is at 400 mc. Thus, when transmitting over a long, difficult path or terrain where the optical line of sight is partially obscured by intervening obstacles,

the lowest frequency range (from 50 to 100 mc) will give the best results.

a. Figure 39 is a graph of attenuation versus distance for various operating frequencies of Radio Set AN/TRC–24 and shows that the lowest frequency range gives the least attenuation and therefore, the best results when transmitting and receiving over long distances.

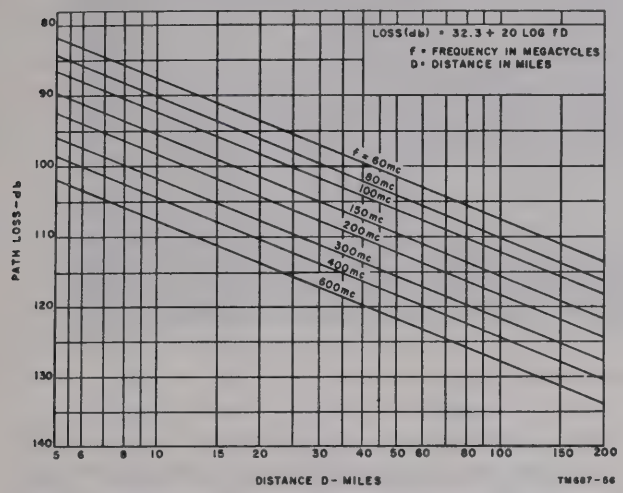

Figure 39. Attenuation versus distance in free space.

b. The A-band of Radio Set AN/TRC–24 (this band is not available for use at the present time) uses the range of frequencies from 50 to 100 mc. This band of frequencies is congested because of tactical vhf and other equipments already operating in this band; it should not be used unless an intermediate radio-relay station (to extend the range) cannot be sited.

39. General System Planning

a. A *radio system* consists of two radio terminals and as many radio-relay sets as needed between the two terminals to span the distance between the two terminals adequately. A *route* is another term used to designate a radio system. A *jump* is the distance separating a radio transmitter from the receiver that receives its transmission. A *path* is the terrain over which the transmissions of a jump travel.

b. The procedure to be followed in planning a single-route, radio-relay system is outlined in *c* through *m* below. When planning a system of interconnecting or parallel routes, the procedure outlined below should be followed for each route in the system, and the frequencies for each receiver and transmitter should be selected by following the procedures outlined in paragraphs 53, 54, and 55.

c. Determine the terminal points of each radio system in the route. These points are determined approximately by the location of the telephone equipments that connect to the radio terminals. Choose the exact radio-terminal sites; bear in mind the considerations given in paragraph 40.

d. For each radio system, draw a sketch on graph paper as shown in figure 40. Label one terminal point A and the other terminal point B.

e. Draw an arc that has a radius of 30 miles about point A.

f. Choose a site with high elevation, on or near the 30-mile radius arc drawn about terminal A and approximately in the direction from terminal A to terminal B.

g. Label this site relay point 1 and draw a profile graph of the ground between terminal point A and relay point 1 (par. 41).

h. Use the procedure outlined in paragraphs 41 and 42 and determine if a line-of-sight path exists between terminal point A and relay point 1.

i. If the site chosen for relay point 1 does not give a line-of-sight path as determined from the procedure outlined in paragraphs 41 and 42, discard this site and choose a new site on or near the 30-mile radius arc drawn about terminal A and approximately in the direction from radio terminal A to radio terminal B. Label the new site relay point 1.

j. If it is impossible to have a line-of-sight path between terminal A and any relay point 1, try to reach the 30-mile point in two jumps or determine the suitability of the path from the power-balance calculations (pars. 43–49).

k. When a site has been determined for relay point 1 (*d–j* above), follow the procedure outlined in paragraphs 43 through 49, to determine from the power-balance calculations if the site for radio relay 1 is adequate. If the power-balance calculations indicate that the site chosen for radio relay 1 is inadequate, this site should be discarded, if practicable, and a new site or series of sites chosen by using the profile graph and then the power-balance calculations. If very high obstacles are encountered, refer to the procedure outlined in paragraph 50.

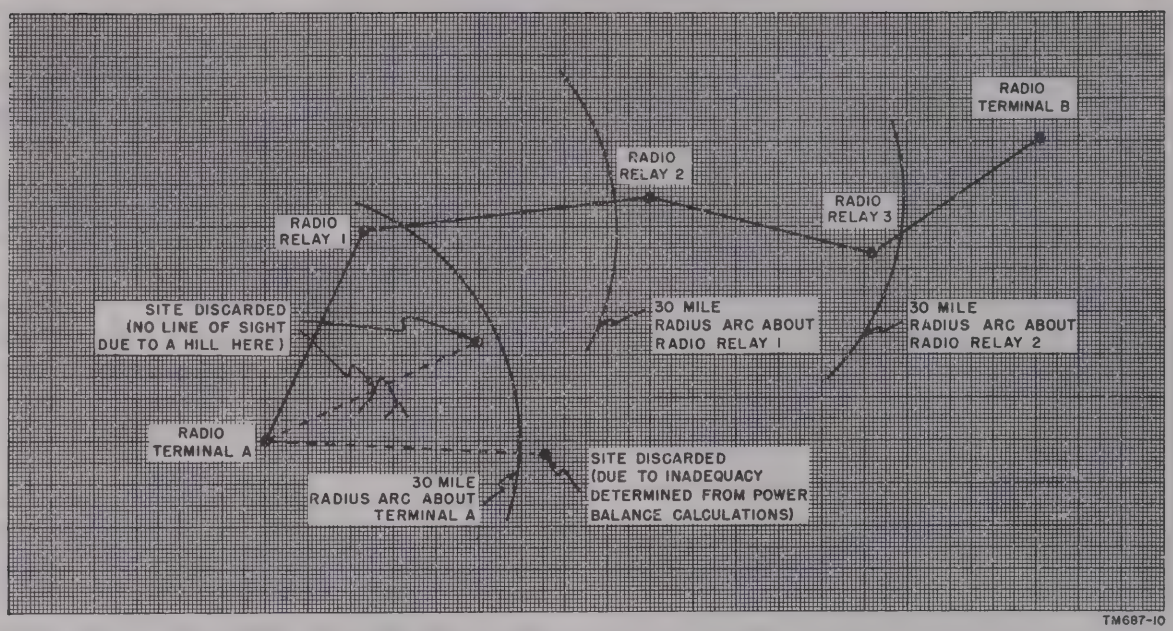

Figure 40. General radio-system planning.

l. After the site for radio relay 1 has been determined, draw a 30-mile radius arc about radio-relay point 1 (fig. 40) and perform steps *d* through *k* above to determine the site for radio-relay point 2.

m. Use the procedures outlined in *d* through *k* above to determine the sites for radio-relay points 3, 4, 5, or as many as needed until radio terminal B is reached. Normally, there should be no more than eight jumps in a radio system.

n. Determine the operating frequency and rf channel of each radio transmitter and receiver in the system by using the procedure outlined in paragraph 52 if a single route is being planned. If a multiple route system is being planned, use the procedure outlined in paragraphs 53, 54, and 55.

o. When planning a radio system, bear in mind the system planning considerations given in paragraphs 56 through 58.

40. General Siting Considerations

a. Accessibility. The choice of suitable locations also depends on good roads, so that the equipment and supplies of gasoline, water, oil, and food can be transported in and out without too much difficulty.

b. Topographical and Man-Made Objects To Be Avoided. Signals can be transmitted farther if the antennas are high and clear of hills, cliffs, buildings, densely wooded areas, and other obstructions. Depressions, valleys, etc., are poor places for radio sites because the surrounding high ground absorbs rf energy. Weak or distorted signals may result if the set is operated near steel bridges, *underpasses,* power lines, or power units. Allow at least 200-foot clearance between intervening obstructions and antenna sites.

c. Choosing a Site. If possible, choose a site on a hilltop or elevation. Flat ground with good drainage at the site is desirable. If the equipment is part of a communication center but is not installed within the center, locate the equipment nearby.

41. Plotting Profiles on Nonlinear and Linear Graph Paper

a. Plotting Profiles on Nonlinear Graph Paper. To determine whether a line-of-sight path exists before choosing a site, a profile map of the terrain between the two proposed sites should be drawn (fig. 41). The nonlinear graph paper used for plotting profiles from terrain maps is shown in figure 42. Either of the two graphs on figure 42 may be used, depending on the elevations and distances between the two proposed sites. The upper graph is used for elevations up to 5,000 feet and distances up to 125 miles. The lower graph is used for elevations up to 500 feet and distances up to 50 miles. This graph paper is used as follows:

(1) Determine from the terrain map the scales used for the distances involved.

(2) Draw a line on the terrain map between the two proposed sites (E or H, fig. 41). Measure the length of this line and convert it to the distance between the two points.

(3) Determine the elevation at each site as indicated by the contour lines. Add the height of the antenna mast to this elevation to determine the total elevation. For example, referring to path D (H, fig. 41), station N is 1,350 feet high. Adding the antenna height, in this case 50 feet, brings the total elevation to 1,400 feet. This point is marked off on the vertical scale of the graph above the 0-mile point (J, fig. 41). Station 0 has an indicated elevation of 1,400 feet. This height plus the antenna height of 50 feet gives a total elevation of 1,450 feet. This is plotted on the vertical scale (J, fig. 41) above the 27-mile point, because 27 miles is the distance between the two proposed sites.

(4) Draw a straight line on the profile chart between these two points. Check this line and note its lowest point.

(5) Draw a complete profile of the terrain between the two sites. Follow the line drawn on the terrain map and pick out high and low points. Plot these points on the graph paper and join them. All points that are above the straight line on the graph (I, fig. 41) represent intervening obstructing terrain.

(6) If there are intervening hills between the two proposed sites, as in path C, or if the site line is below the curvature of the earth, as in path B (G, fig. 41), poor communication will result. Do not use such paths. Use path D because there are no intervening obstructing hills, and good communication will be obtained.

(7) A quicker method of determining line of sight may sometimes be used. After the straight line has been drawn on the profile chart, scan the line and determine the elevation of the lowest point on the line. Next, scan the corresponding line on the contour map and determine whether any point is at a higher elevation than that of the lowest point of the profile-chart line. If there is none, as on path D, a line-of-sight path exists between the end points of the line and it is not necessary to plot the profile of the intervening terrain. If there are elevations above the point of lowest elevation, as on path C, draw a complete profile to determine whether these high points represent obstructions. For example, the point of lowest elevation on the profile-chart line for path A (F, fig. 41) is 10 feet. On the terrain map, note that path A passes over a portion of terrain that exceeds 10 feet in elevation. Therefore, it is necessary to plot the profile chart before deciding that path A will provide a line-of-sight path.

(8) If the proposed site is intended for a relay station, the transmission path to each associated relay or terminal station must be considered. It is necessary that line-of-sight paths exist in both directions.

b. Plotting Profiles on Linear Graph Paper. If profile graph paper is not available, a profile may be plotted on linear graph paper and then corrected for the curvature of the earth; use the following chart:

Conversion of Sea-Level Elevations to Line-of-Sight Elevations

D (miles from reference point)	Elevation correction (ft) ($k=1$)	D (miles from reference point)	Elevation correction (ft) ($k=1$)
2	3	20	266
4	11	22	323
6	24	24	384
8	43	26	450
10	67	28	522
12	96	30	600
14	130	32	682
16	170	34	771
18	217	36	865

Note. The corrected elevation in feet equals

$$\frac{D^2 k}{1.5}$$

where k is the ratio of the effective radius of the earth to the true radius of the earth and D is the distance in miles from the reference point. This formula does not correct for the effect of refraction of the radio wave.

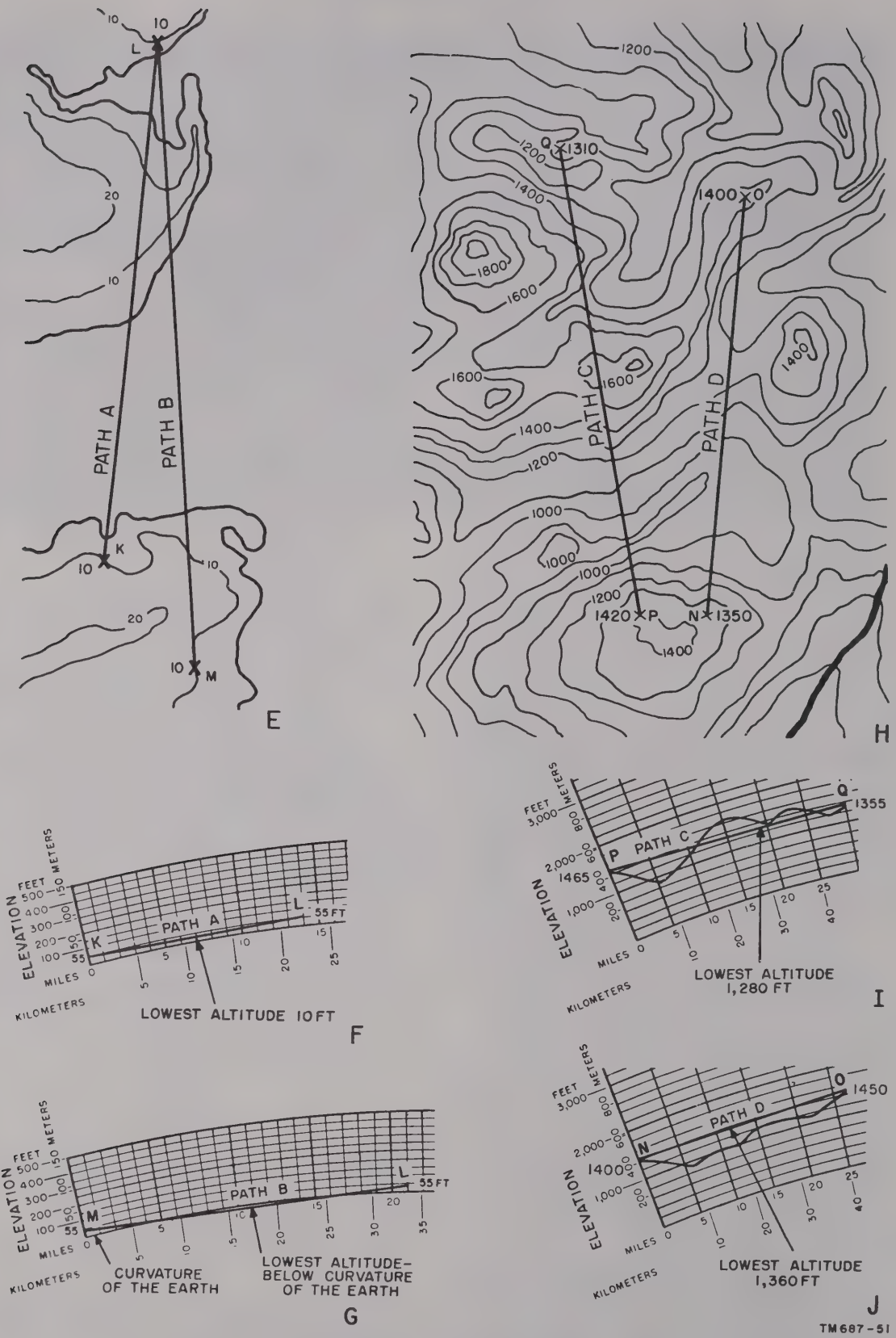

Figure 41. Plotting profiles.

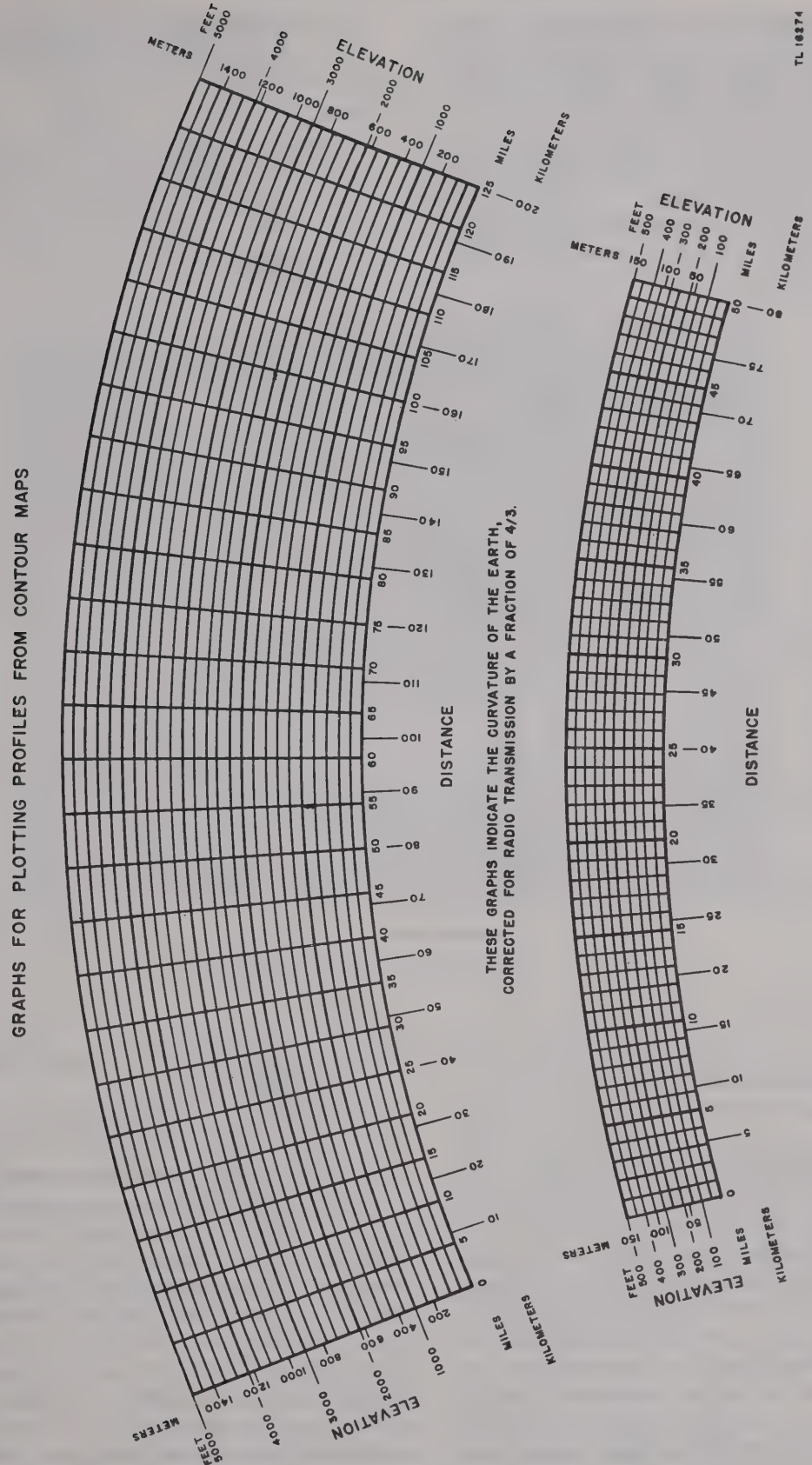

Figure 42. Nonlinear graph paper.

(1) Determine from the terrain map the scales used for distances and elevations. Draw a line on the terrain map between the two proposed sites.

(2) Pick out high and low points along the line and plot these to scale on the linear graph paper. A sample profile is plotted as a broken line curve on this type of graph paper (fig. 43).

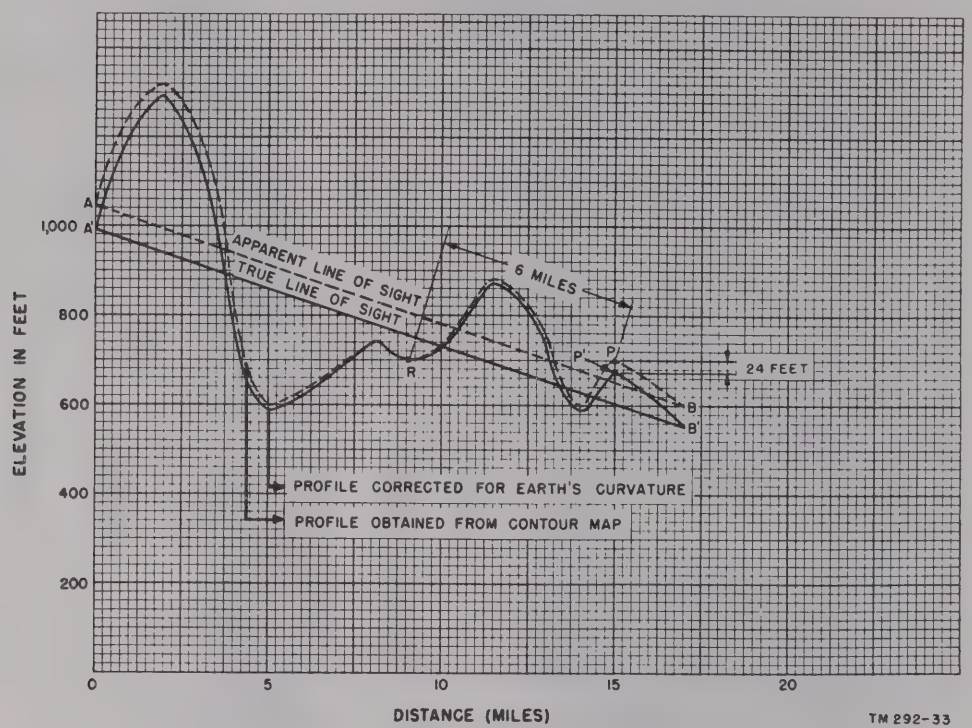

Figure 43. Plotting profiles on linear graph paper.

(3) Draw a line on the graph paper between terminal points *A* and *B*.

(4) Correction must be made for the curvature of the earth to obtain a true picture of the line-of-sight path. A high or low point is selected that is as near as possible to the point halfway between the terminals, in this case R. Next, by means of the figures shown in the conversion chart above, the heights of all prominent points in both directions from this central point must be corrected (shown as a solid-line curve). For example, point P shown in figure 43 is 6 miles from reference point R. After correction, P becomes P^1, 24 feet lower than the original point.

$$\frac{D^2 k}{1.5}$$

(5) Some profile maps will indicate a line-of-sight path with the drawing uncorrected. With the correction, however, intervening objects may be apparent.

42. Determining Line of Sight from Profile Graph

After drawing the profile graph for a particular path and correcting for the earth's curvature, if necessary, check the graph carefully to see that a true line-of-sight path exists. The path should not be obstructed in any way nor should it come closer than 200 feet to any intervening obstructions. If the path is obstructed, discard the site and choose a new one if possible (par. 39*i*). If it is impossible to have a line-of-sight path, determine the adequacy of a path from the power-balance calculations (pars. 43–49). If very high obstacles are encountered in a path, refer to the procedure outlined in paragraph 50.

43. General Power-Balance Calculation Considerations

a. The power-balance calculations are made when planning a system to determine if the estimated loss over a particular path does not exceed the allowable loss for that path. Follow the procedure outlined in paragraph 44 to calculate the allowable loss for a desired path. Follow the procedure outlined in paragraphs 45 through 49 to determine the estimated loss over a contemplated path. If the estimated path loss is greater than the allowable path loss, the path should be changed or the jump length should be shortened to reduce the estimated path loss.

b. In general, when the power-balance calculations indicates that a jump will have too much attenuation, either shorten the jump length to reduce the estimated loss for that jump, or use an intermediate repeater stations. If it is impossible to shorten the jump length or to add an intermediate repeater station, the jump should be used although it introduces too much estimated loss. However, in a system where one or more jumps have a greater estimated loss than allowable loss, these jumps will limit the operating effectiveness of the radio system. Every effort should be made to reduce the path attenuation while planning and after setting up a radio system.

c. Power-balance calculations, which are performed while planning a radio system, gives only an approximate indication of the performance of a radio system. The only way to get an accurate indication of system performance is to set up the system and test it. If the loss of a particular jump is difficult to determine from power-balance calculations, the jump may be installed and tested.

44. Calculation of Allowable Path Loss

The procedure outlined in this paragraph should be used to determine the nominal allowable loss per jump for the radio system. The nominal allowable loss depends on the number of traffic channels (4 or 12) and the type of telephone system (*terminal trunk* or *via trunk*). Switched circuits are divided into *loops* and *trunks*. A loop terminates in a telephone at one end and a switchboard at the other end. A trunk terminates in a switchboard at both ends. From a transmission standpoint, there are two kinds of trunks, *terminal* and *via*. Terminal trunks are suitable only for connection to loops. Via trunks are suitable for connection to loops or to other via trunks. A via trunk is sometimes called a *link*. Proceed as follows:

a. Determine the number of jumps in the radio system (par. 39).

b. Use the chart below to determine the nominal allowable loss per jump for the radio system.

Nominal allowable loss per jump chart

Number of jumps	1	2	3	4	5	6	7	8
Loss (db) 4-channel operation.	140	137	135	134	133	132	131	131
Loss (db) 12-channel operation.	130	127	125	124	123	122	121	121

c. The values given in the chart above are for via trunk applications. If the radio system is used in a terminal trunk circuit, the values given in the chart should be increased by 10 db.

Caution: If the radio sets are to be operated where there is a great deal of man-made noise, the values given in the chart should be decreased by 10 db.

Notes:

1. Because the radio system normally should not contain more than eight jumps, only the values for eight jumps are given in the chart.

2. The values given in the chart are for Radio Set AN/TRC–24 operating with normal lengths of lead-in cable (80 ft.), normal dipole antennas, and with an output power of 50 watts.

d. Subtract the loss arising from any added length of antenna lead-in cable from the nominal allowable loss. See *c* above. Multiply the loss per foot (at the operating frequency) given in the chart below by the added length in feet to determine the total added loss because of extra lead-in cable.

Antenna lead-in cable loss chart (RG–14A/U)

Frequency (mc)	50	100	150	200	250	300	350	400	450	500	550	600
Loss per ft (db)	.009	.014	.018	.0215	.025	.0275	.0305	.0335	.036	.039	.041	.044

e. Add to or subtract from the nominal allowable loss the difference of gain between the standard antenna and the antenna used for operation. The difference in gain is added to the allowable loss if the gain of the operating antenna is greater than the gain of the standard antenna. The difference in gain is subtracted if the gain of the operating antenna is less than the gain of the standard antenna. The gain of the standard antenna (shipped with the radio set) at different frequencies is given in the chart below.

Antenna gain chart

Frequency (mc)	50 to 100.	100 to 225.	225 to 400.	400 to 600.
Gain (db)	5.	6.	8.	10.

f. Determine, if possible, the approximate output power at which the radio transmitter will operate. Add to the nominal allowable loss the db loss or gain at the transmitter output power shown in the chart below. If necessary, interpolate intermediate values from the chart.

Note. If it is not possible to determine the approximate output power of the radio transmitter, neglect this step.

Power loss chart

Output power (watts)	Loss or gain (db)
10	−7
25	−3
50	0
75	+1.8
100	+3
120	+3.8

g. The form used for computation of the allowable loss is given below. Use this form when following the procedure outlined in *a* through *f* above.

Allowable loss computation chart

Item No.	Item	Correction to nominal allowable loss per jump[a] (db) Add	Subtract
1	Lead-in cable (extra lengths):		
	a. Transmitter____ft		
	*_____db/ft.		−____db
	b. Receiver_____ft*		
	_____db/ft.		−____db
2	Antenna gain:		
	a. Transmitter antenna gain _____db −standard antenna gain__db.	+____db	−____db
	b. Receiver antenna gain_____db −standard antenna gain__db.	+____db	−____db
3	Transmitter output power_____watts relative to 50 watts.	+____db	−____db
	Total	+____db	−____db

Nominal allowable loss_____db−_____db+_____db= allowable path loss_____db

*Add the correction if the effect in question tends to make the circuit better; subtract the correction if the effect tends to make the circuit worse.

45. General Calculation of Estimated Path Attenuation

a. General. Various factors and different terrains produce different path attenuation (pars. 32–37) and no two terrains will produce the same path loss unless these terrains are identical in every respect. Therefore, to estimate the path loss for a given terrain, match the terrain to a sample terrain (fig. 44) and use the estimated path loss for the sample terrain.

b. Procedure.

(1) Determine the type of terrain from the profile graph (par. 41).

(2) Use the chart below as a guide for estimating the path loss for a given terrain.

(3) Estimate the path loss for the given terrain by using the references in the right-hand column of the chart below.

(4) This estimated path loss should not exceed the allowable path loss (par.

44). If the estimated path loss exceeds the allowable path loss, refer to paragraph 39.

Vhf path-loss estimation

Item No.	Type of terrain	Shown in cases figure No. 44	For method of solution, refer to paragraph No.
1	Smooth earth or water	A and B	46
2	Gently rolling terrain:		
	a. Within line of sight	C to I	47*a*
	b. At grazing or moderate distances beyond horizon.	J and K	47*b*
	c. Far beyond horizon		47*c*
3	Ridge obstructions or obstructions in otherwise gently rolling terrain.	L	48
4	Rugged terrain with many large and abrupt changes in contour.	M to P	49
	a. When antennas, with path obstructions disregarded, are not high enough to produce free-space loss.		
	b. When antennas, with path obstructions disregarded, are at least high enough to produce free-space loss.		

46. Estimated Path Loss Over Smooth Earth or Water

Follow the procedure outlined in *a* below to determine the estimated path loss over smooth earth or water. An illustrative example is given in *b* below.

(1) Determine from the profile graph (par. 41) the antenna heights (A and B, fig. 44). Where the antennas are placed on a building or a hilltop from which the terrain slopes rapidly to *flat* land (or water), the antenna heights are taken with respect to the level of the land or the water.

(2) Find the geometric mean of the two antenna heights by multiplying the two heights together and taking the square root of the result.

(3) Determine from the appropriate graph or graphs (figs. 45–48) the estimated path loss for the geometric mean of the two antenna heights and the length of the jump. It may be necessary to interpolate on the graphs for values at intermediate frequencies and heights. The losses over land and over sea water with horizontal polarization are shown on figures 45 and 46 as solid lines; the losses over sea water with vertical polarization are shown as broken lines. At the higher frequencies and higher antenna heights, the losses over sea water with vertical polarization and over land are identical and the path loss values over land are used for both. The losses over fresh water are taken as half-way between that over land and that over sea water with vertical polarization.

b. Illustrative Example. As an example of estimating the path loss over smooth earth or water, assume that it is desired to find the path loss of B, figure 44. Assume that one antenna is on a 45-foot mast located on a hill rising 30 feet above a beach, and the other antenna, 40 miles away over a sea-water path, is 150 feet above the water level. The path loss at 100 megacycles between vertical half-wave dipoles is determined as follows:

(1) First antenna height is 30 feet +45 feet = 75 feet.

(2) Second antenna height is 150 feet.

(3) Geometric mean = $\sqrt{75 \times 150} = 106$ feet.

(4) Path loss at 60 mc (fig. 45) is 141 db.

(5) Path loss at 150 mc (fig. 46) is 144 db.

(6) Path loss at 100 mc (interpolated) is 142 db. This is the estimated path loss for the assumed jump and terrain.

47. Estimated Path Loss Over Gently Rolling Terrain

The method of estimating the path loss over gently rolling terrain with antennas within line of sight is given in *a* below. The method of determining the path loss over gently rolling terrain with antennas at grazing or at moderate distances beyond line of sight is given in *b* below. The method of determining the path loss over gently rolling terrain with antennas at large distances beyond line of sight is given in *c* below.

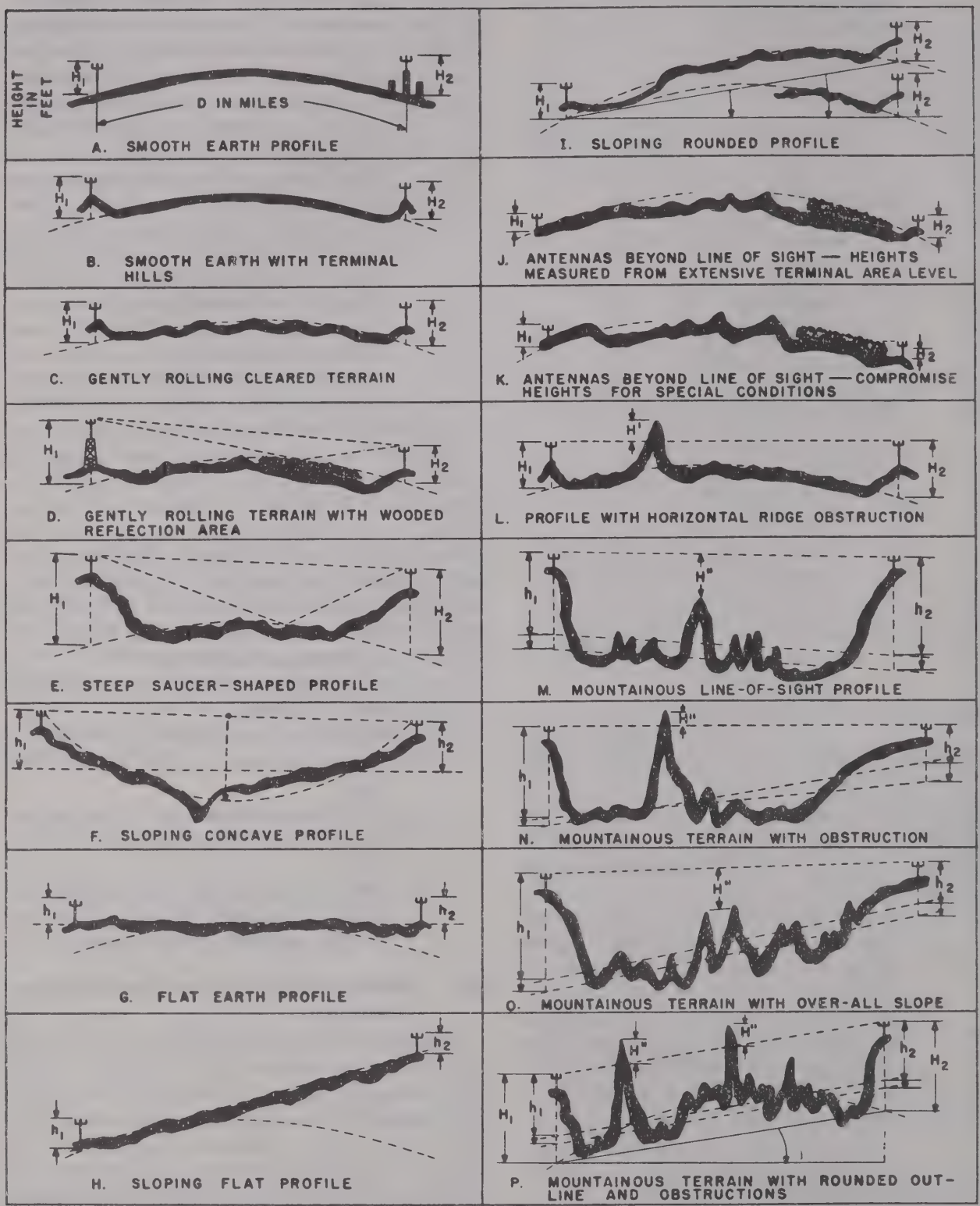

Figure 44. Typical path profiles.

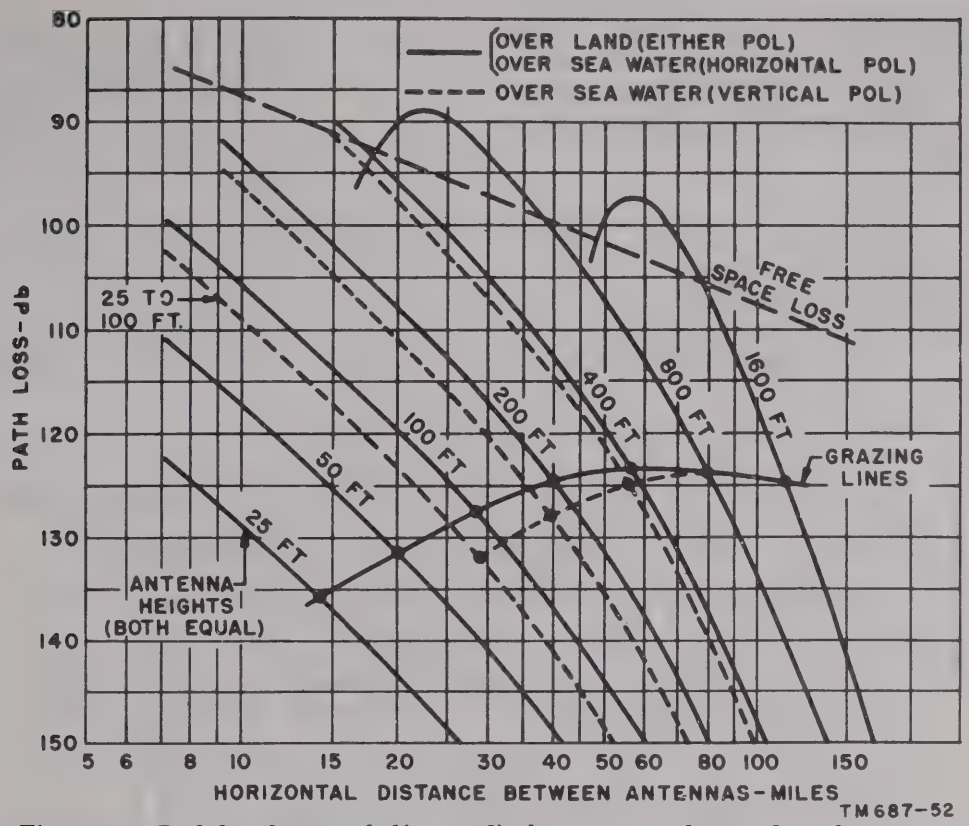

Figure 45. Path loss between half-wave dipoles over smooth curved earth at 60 mc.

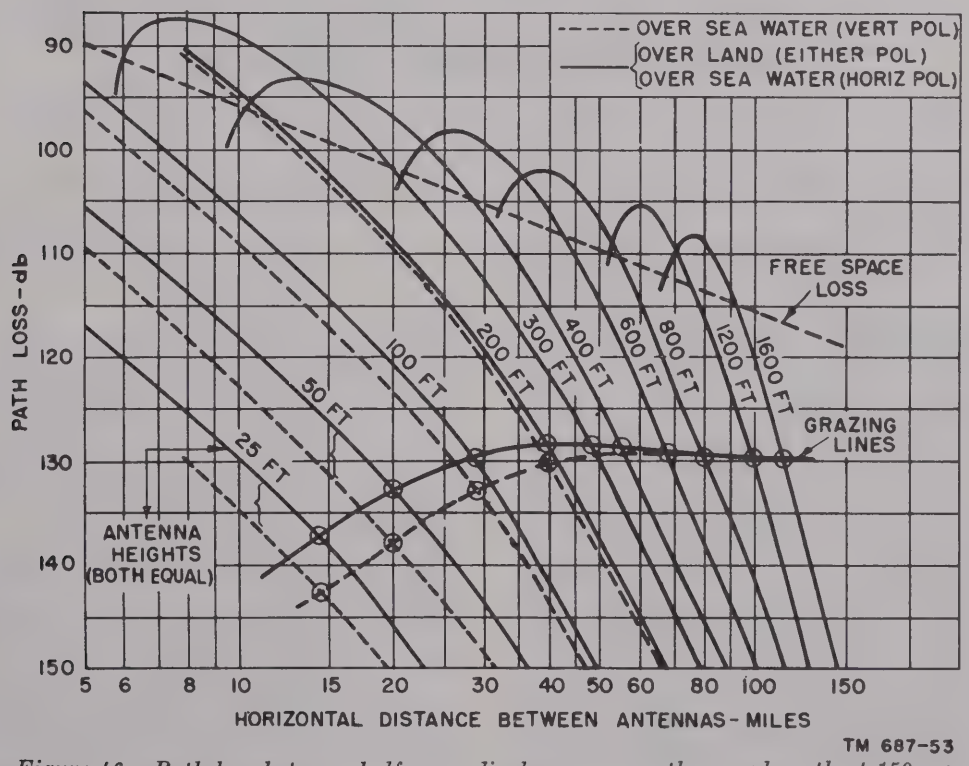

Figure 46. Path loss between half-wave dipoles over smooth curved earth at 150 mc.

a. Antennas Within Line of Sight. When estimating the path loss over gently rolling terrain with antennas within line of sight, the smooth earth curves given in figures 45 through 48 can be used.

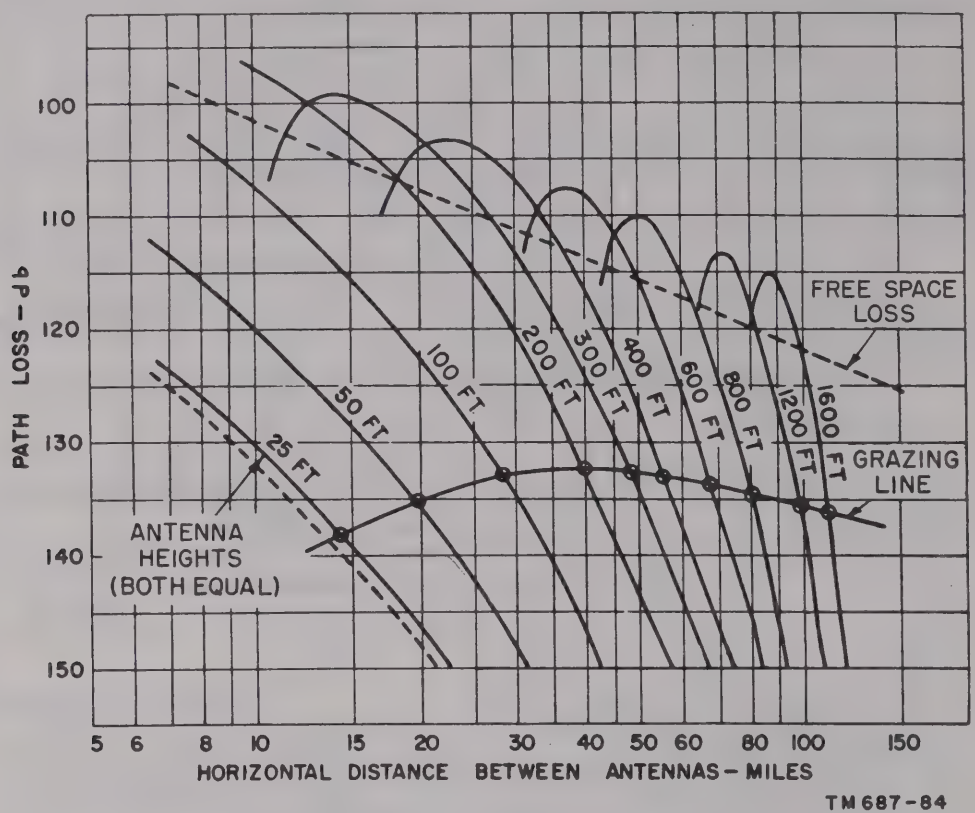

Figure 47. Path loss between half-wave dipoles over smooth curved earth at 300 mc.

(1) Find the geometric mean of the antenna heights from the profile graph as given in paragraph 46. Take antenna heights equal to a height above a curved earth surface placed at the *average* elevation of the terrain. Some typical terrains are shown in C through I on figure 44.

(*a*) In C, figure 44, the equivalent smooth earth surface is drawn through the uneven terrain in the general midsection of the path (broken line), and the antenna height is measured above the level of the equivalent smooth earth surface at each end.

(*b*) In D, figure 44, part of the terrain is shown as thickly wooded, and the average treetop level in this region is used as the equivalent smooth earth level for determining antenna heights. A sparse growth of trees, or trees without foilage may be ignored. Because high losses occur when antennas operating in the vhf band are placed below treetop level in or near dense woods, vhf antennas are not placed below treetop level.

(*c*) In E, figure 44, a saucer-shaped profile with steep sides, extending only a small fraction of the path length, is shown. In this example, the heights above the average valley floor are used for the antenna heights as illustrated.

(*d*) Where the profile has more gradually sloping sides extending for a large fraction of the path length, the average elevation of the reflection area is higher than the valley bottom and an equivalent smooth ground surface of intermediate ele-

vation is used to determine the antenna heights. This is shown in F, figure 44.

(2) Determine from the appropriate graph or graphs (figs. 45–48) the estimated path loss for the geometric means of the two antenna heights and the length of the jump. It may be necessary to interpolate on the graphs for values at intermediate frequencies and heights.

(*b*) Determine the additional (auxiliary) path loss from the value on the abscissa of figure 49 by using the following formula:

$$\frac{fh_1h_2}{D \times 10^6}$$

where h_1 = height of antenna No. 1 in feet, h_2 = height of antenna No. 2 in feet; D = length of jump in miles; and f = operating frequency in megacycles.

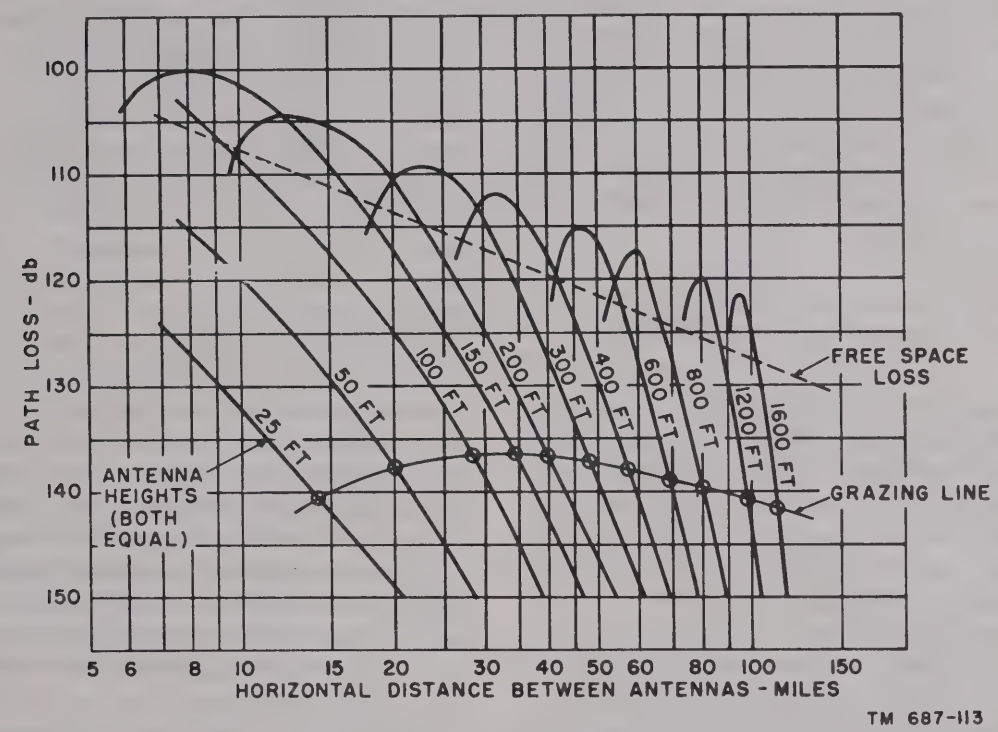

Figure 48. Path loss between half-wave dipoles over smooth curved earth at 600 mc.

(3) In the special case where the slopes shown on the profile graph are so long and gradual as to *just* overcome the earth's curvature over the path length, the path loss can be determined from figures 39 and 49 based on smooth earth with the antenna heights as shown in G on figure 44. The heights of the antennas should be greater than 2 wavelengths for accuracy with this smooth earth method. Proceed as follows:

(*a*) Determine the path loss in db for the length of the jump from figure 39.

(*c*) Use the value obtained in (*b*) above to find the additional path loss in db from figure 49.

(*d*) The total estimated path loss is then the sum of the values obtained in (*a*) and (*c*) above.

(4) Occasionally a sloping profile is encountered, such as shown in H or I of figure 44. The equivalent reflecting surface can be drawn and the net heights determined as shown (H and I, fig. 44). The antenna heights are measured perpendicularly to the equivalent reflecting surface. Use the procedure outlined in (3) above

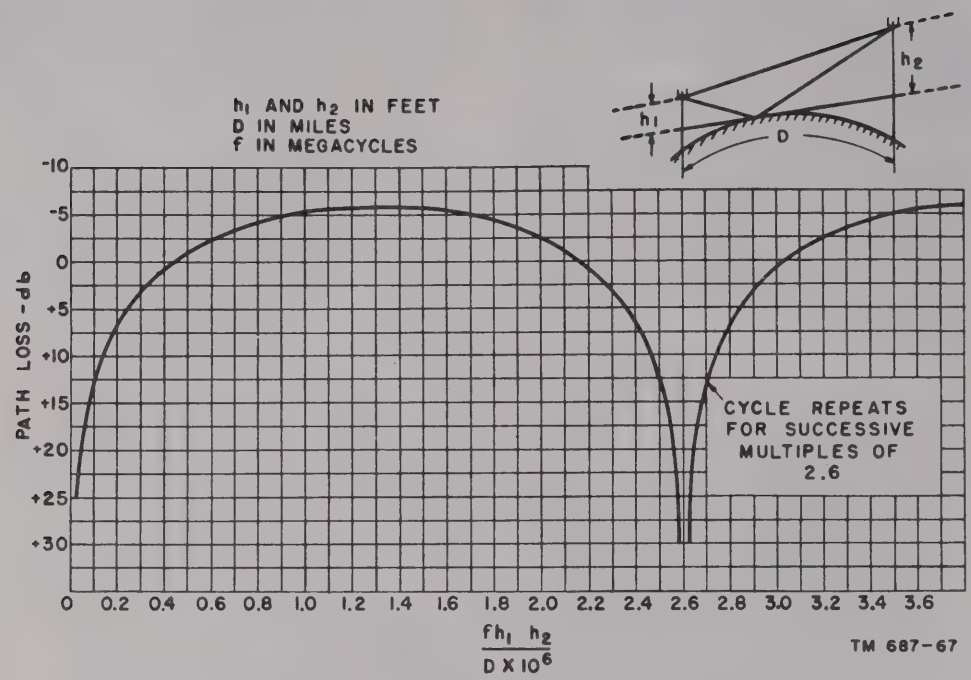

Figure 49. Auxiliary loss to be combined with free-space loss.

(based on smooth earth) to estimate the path loss. For the tilted equivalent reflecting surface (H, fig. 44), the height of the antennas above the equivalent reflecting surface should be 2 wavelengths or greater for accuracy with this method.

b. Antennas at Grazing or at Moderate Distances Beyond Line of Sight. When determining the path loss over gently rolling terrain with antennas at grazing or at moderate distances beyond line of sight, the smooth earth curves shown in figures 45 through 48 can be ·ed. Proceed as follows:

(1) Find the geometric mean of the antenna heights from the profile graph as given in paragraph 46. Take antenna heights as the height above the average level of the terrain in the first few miles of path from each antenna. Where dense woods extend to a few hundred feet from the antenna outward for a mile or more along the path, take an antenna height equal to either the height above the treetops or one-half the antenna height above the average height of the nearby ground, whichever is greater. Such conditions are shown in J and K, figure 44.

(2) Determine from the appropriate graph or graphs (figs. 45–48), the estimated path loss for the geometric mean of the two antenna heights and the length of the jump. It may be necessary to interpolate on the graphs for values at intermediate frequencies and heights.

(3) As an illustrative example of the above procedure, refer to K, figure 44. Assume the antenna at the left is 125 feet high and the antenna at the right is 70 feet above the average cleared level area, but is rarely above the dense trees that extend within a few hundred feet of the antenna; then, the net height of the antenna at the right is taken as one-half the height above the average local ground, (35 ft). Assume the operating frequency to be 200 mc and the jump length 30 miles.

(*a*) The geometric mean of the antenna heights $= \sqrt{125 \times 35} = 66$ feet.

(*b*) Path loss at 150 mc (fig. 46) = 141 db.

(*c*) Path loss at 300 mc (fig. 47) = 145 db.

(*d*) The estimated path loss at 200 mc (interpolated) = 143 db.

c. Antennas at Large Distances Beyond Line of Sight.

(1) Calculations of path losses on the basis of an idealized smooth earth at more than moderate distances beyond the horizon are, in general, conservative. Experiments have shown measured losses to be less than calculated losses and, in most cases, do not depend on frequency. Also measured losses to some extent are independent of antenna heights and terrain.

(2) Path loss values obtained by trial methods are typical of the average path losses on vhf circuits that extend far beyond the line of sight. However, differences of ±10 db from the average losses are possible on any one particular path. At distances where the earth's curvature effect brings the path loss, as determined by using the procedure outlined in *b* above, to *more* than that indicated in the chart below, use the values given in the chart (or intermediate values obtained by interpolation), regardless of the antenna heights. Where the procedure outlined in *b* above shows a loss value *less* than that shown in the chart, use the value obtained in *b* above for the estimated path loss.

Path loss for antennas beyond line of sight

Path length (miles)	Path loss at various frequencies (db)			
	60 mc	*150 mc*	*300 mc*	*600 mc*
70	145	153	159	165
100	158	166	172	178
200	182	190	196	202
300	195	203	209	215

(3) In the tabulation in (2) above, high obstructions within a few miles of either antenna would cause additional loss (par. 48) that must be added to the tabulated loss. High ridges in the middle region of a very long path may cause diffraction phenomena that permit reliable transmission over very long distances (par. 50).

48. Estimated Path Loss with Horizontal Ridge Construction in Otherwise Flat or Gently Rolling Terrain

A simplified procedure for estimating the path loss over a horizontal ridge obstruction is given in *a* through *d* below. This procedure will give reasonable close results in most situations.

a. Assume the horizontal ridge to be absent and determine the estimated path loss as outlined in paragraph 47*a*, *b*, or *c*, depending on whether the antennas are within line of sight, at moderate distances beyond line of sight, or at greater distances beyond line of sight.

b. Determine the additional loss introduced by the horizontal ridge from the nomograph in figure 50. The method of determining the additional loss from figure 50 is as follows:

(1) Determine the distance, d_1 (in miles), from the obstruction to the nearer antenna.

(2) Draw a line of sight on the profile graph between the two antennas. Determine H (in ft), which is the height of the obstruction above the line of sight between the two antennas.

(3) On figure 50, draw a straight line from d_1 to H. This line is indicated as a broken line between the value 10 on vertical line d_1 MILES, and the value 100 on vertical line H FEET. Extend the line until it crosses the center uncalibrated vertical line at some point.

(4) Draw a second straight line through the point of intersection of the first line with the uncalibrated vertical line ((3) above) and through the point that represents the frequency in mc on the FREQ scale. The frequency operation taken in this case is 275 mc. Extend the second line until it crosses the SHADOW LOSS scale at some point. The value at the intersection of the second line with the shadow loss scale is the shadow loss in db. This value is shown as approximately 3.6 db on the illustration.

(5) When two or more sharply defined

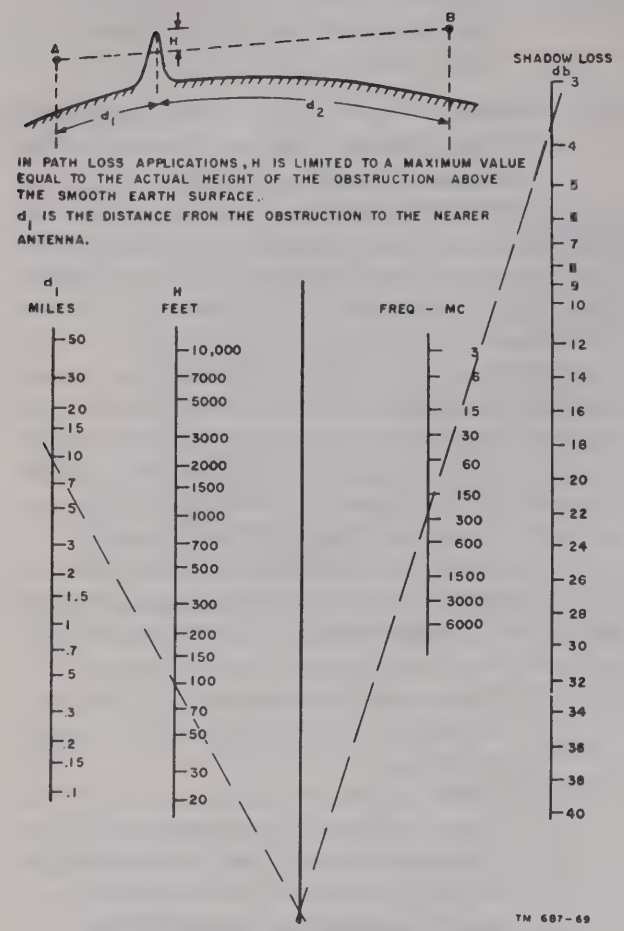

Figure 50. Shadow loss caused by obstruction relative to smooth earth.

ridges occur in an otherwise gently rolling terrain, the net effect is approximated by calculating the shadow loss for each ridge separately (assuming the others to be absent), then taking the square root of the squares of the individual losses in db as the net loss L. The net loss L is obtained by the formula below:

$$L = \sqrt{L_1{}^2 X L_2{}^2 \times L_3{}^2 + \ldots . L_n{}^2 . . .}$$

c. Add the loss obtained in *a* above to the loss obtained in *b* above. This is the estimated path loss.

d. An example of the procedure given above is as follows: A terrain with an intervening horizontal obstruction is shown in *L*, figure 44. Assuming 100-foot antenna heights and 200-mc transmission over a 30-mile path, the smooth earth loss is interpolated between 131 db at 150 mc and 135 db at 300 mc (figs. 46 and 47). This results in a loss of 213 db at 200 mc. If the obstructing portion of the ridge height extends 90 feet above the direct line between antennas and the ridge is located 9 miles from the nearer antenna, the shadow loss from figure 50 is slightly less than 4 db. The total path loss is therefore estimated at 136 db. Note that the estimates of losses in some obstructed paths can be in error by several db.

49. Estimated Path Loss Over Rugged Terrain with Many Large and Abrupt Changes in Contour

a. The main problem in estimating the path loss over rugged terrain is the determination of the equivalent reflecting plane. The equivalent reflecting plane can be determined by referring to the typical terrains presented in M, N, O, and P, figure 44.

(1) In M, the equivalent plane is located at the average level of the long hilly expanse extending through the path. Sharp isolated peaks of unusual prominence are not considered in selecting the plane, but are tested later as separate obstructions in estimating the path loss (par. 48).

(2) In N, the long stretch of high land near the antenna at the right is important in defining the equivalent reflecting plane because it blocks and reflects an appreciable portion of the transmitted wave that would otherwise reach the lower valley floor directly. The reflecting plane (as shown in N), therefore, is sloped markedly from right to left. There is again some freedom in the final selection of the plane as indicated in N, figure 44. The center peak is treated as an obstruction in estimating the path loss (par. 48).

(3) In O, a sloping line drawn more or less in the direction of the average terrain becomes the equivalent reflecting plane. The deep and narrow depressions in the center of the path are not too important in defining the equivalent reflecting plane because most reflections of consequence would, in this case, come from the broader hilltops. When the elevation of the an-

tenna above the plane is small, as in the antenna at the right of the profile, differences in the location of the plane can make appreciable changes in the estimated loss. Little can be done to eliminate this possibility of error.

(4) In P, the terrain, although rough, has a broad bulge in the center. This makes the location of the equivalent reflecting plane difficult to determine. Several trial locations should be made to determine the sensitiveness of the estimated path loss to changes in the trial location. From these trials, the best answer is obtained by a study of the results of the computations. In the particular case of P, a curved earth profile formed by tilting the surface of a 4/3-radius earth to an average position gives a result similar with the flat earth computation (par. 48).

b. The procedure to be followed to estimate the path loss over a rugged terrain is as follows:

(1) Determine the equivalent reflecting plane for the terrain by reference to M, N, O, or P of the figure 44 and the general procedure outlined in *a* above.

(2) Determine the free-space loss for the jump distance and operating frequency from data on figure 39.

(3) Determine the auxiliary loss over the path by use of figure 49 and the procedure outlined in paragraph 47*a*(3).

(4) Determine the shadow loss from any obstructions in the path. The shadow loss is determined in one of two ways, depending on the range of antenna heights. The antenna heights are taken as the respective perpendicular distances from the two antennas to the equivalent reflecting plane.

(*a*) *For low antennas* (with path obstructions disregarded) that are not high enough to attain free-space loss, the shadow loss for each obstruction is obtained from figure 50 by using the procedure outlined in paragraph 48*b*. The antennas are not high enough to give free-space loss when

$$\frac{fh_1h_2}{D \times 10^6}$$

is less than .47. In the equation above:

f is the operating frequency (mc),

h_1 is the height of antenna No. 1 over the equivalent reflecting plane (ft.),

h_2 is the height of antenna No. 2 over the equivalent reflecting plane (feet), and

D is the length of the jump (miles).

(*b*) *For high antennas* (with path obstructions disregarded) that are at least high enough to obtain free-space loss, the shadow loss for each obstruction is obtained from figure 50 by using the procedure outlined in paragraph 48*b*. The antennas are high enough to give free-space attenuation when

$$\frac{fh_1h_2}{D \times 10^6}$$

is greater than .47.

(5) Add the loss values obtained in (2), (3), and (4) above except when the value obtained in (3) above is negative, in which case it should be neglected. This is the total estimated loss for the path.

c. The following are examples of the procedures outlined in *b* above:

(1) As an example, if in N, figure 44, the antennas have heights of 400 and 250 feet above the equivalent reflecting plane and are separated by 25 miles with a 100-foot obstruction penetrating the line of sight at a point 8 miles from the antenna at the left, the path loss at 150 mc is determined as follows:

Free-space loss (fig. 39) = 104 db

$$\frac{fh_1h_2}{D \times 10^6} = \frac{(150 \times 400 \times 250)}{25 \times 10^6} = .60$$

Auxiliary loss (fig. 49) = 2.5 db

Smooth earth loss = free-space loss

Loss + auxiliary loss = 104 − 2.5 = 101.5 db

Because

$$\frac{fh_1h_2}{D \times 10^6}$$

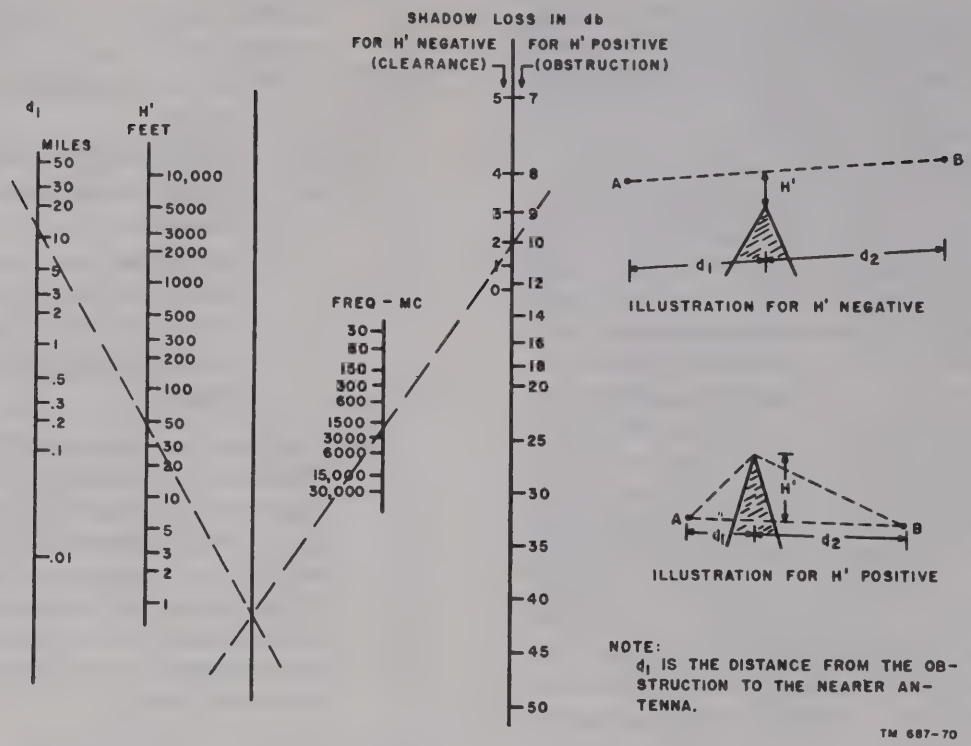

Figure 51. Shadow loss due to obstructions relative to free-space.

is greater than .47, figure 51 is used to determine the obstruction shadow loss. For a 100-foot obstruction at a distance of 8 miles, a shadow loss of 9 db is calculated. The 9 db is added to the free-space loss (neglecting the auxiliary loss, since it is negative), thereby, giving a total estimated path loss of 104 + 9 = 113 db. The result is only an estimate for a complicated situation and can be in error by 10 db or more.

(2) As another example, if in 0, figure 44, the antenna heights are 140 and 75 feet, the path loss at 150 mc and 25 miles is determined as follows:

Free-space loss (fig. 39) = 104 db

$$\frac{fh_1h_2}{D \times 10^6} = \frac{(150 \times 140 \times 75)}{25 \times 10^6} = .063$$

Auxiliary loss (fig. 49) = 16 db

Smooth earth loss = free-space loss

Loss + auxiliary loss = 104 + 16 = 120 db

Because

$$\frac{fh_1h_2}{D \times 10^6}$$

is less than .47, figure 50 is used to determine the obstruction shadow loss. However, the ridge shown in 0 does not go above the line of sight between antennas and, therefore, it is assumed that no shadow loss occurs.

50. Use of Obstacles in a Path to Obtain Long Transmission Paths

Successful vhf communications have been reported over very long paths across mountainous terrain, because of the existence of a very large obstacle near the center of the transmission path. In mountainous terrain where high obstacles are encountered, the following procedure may be followed to obtain long transmission paths.

a. Select a very high obstacle from 50 to 100 miles from the first antenna and approximately in the desired direction of transmission.

b. Place the second antenna on the other side of the obstacle, approximately 50 to 100 miles away and in the same vertical plane as the first antenna and the top of the obstacle. It is important to keep the two antennas and the top of the obstacle in the same vertical plane to obtain minimum attenuation over the path. The antenna should be located as far as possible from the obstacle because the signal attenua-

tion increases as the antennas are moved closer to the obstacle.

c. Set up the two radio sets, one at each end of the jump, and test the quality of transmission. Vary the height and position of one antenna until a position and height is found where a signal of maximum intensity is received.

d. Use figure 52 and obtain an approximate indication of the path loss with a very high obstacle. Figure 52 shows the free-space transmission loss and the smooth earth transmission loss for path lengths of 50 and 150 miles when using the principle of diffraction over high obstacles. The antenna heights are given as 100 feet above the surface. Also shown on figure 52 is the path loss at 50 and 150 miles plotted against the obstacle height.

51. Band-Pass Filters

a. Advantages of Using Band-Pass Filters. Twelve band-pass filters are included with Radio Set AN/TRC–24 for use on the B and C bands. These filters can be used in either the transmitter or the receiver. The advantage of using these band-pass filters are as follows:

(1) These filters cause a loss of approximately 1 db at the operating frequency and provide a loss of 30 db or more at all frequencies 20 mc or more from the operating frequency (figs. 53 and 54).

(2) When used in the receiver, the band-pass filter reduces interference by introducing considerable loss at the undesired frequencies and also causing a small loss at the desired operating frequency. When used in the transmitter, the band-pass filter reduces undesirable transmission by introducing considerable loss at frequencies other than the operating frequency.

b. Use of Band-Pass Filters. The correct band-pass filter for the operating frequency must be used in the receiver and should be used at all times in the transmitter unless it is definitely known that there will be no interference to or from nearby radio systems. The band-pass filter used should be accurately adjusted to the operating frequency. If the band-pass filter is not accurately adjusted, the carrier signal at the operating frequency will be greatly attenuated. The losses (in db) obtained between 50-ohm terminations for frequencies above and below the operating frequency are shown on the graphs of figures 53 and 54.

52. Selection of Operating Frequencies for Isolated Route

a. General.

(1) Suitable equipment and good antenna sites are not enough to insure a good radio-relay circuit. Operating frequencies must be obtained from the assignment authority and it is important that these be chosen so as to be free from interference.

(2) The general frequency band used in a particular case must fit the type of radio-relay system used. Within a particular band, frequencies for radio-relay use in a given area should be chosen to avoid mutual interference. If there is some freedom of choice, frequencies that are best propagated should be chosen: higher frequencies should be used for short jumps and for jumps over smooth terrain; lower frequencies should be used for longer jumps or for obstructed paths.

b. Minimum Frequency Separation Between Adjacent Transmitters and Receivers With Band-Pass Filters.

(1) At vhf, the transmitting frequencies at a station must be well separated from the receiving frequencies to guard against transmitter-to-receiver interference. Do this by setting up a frequency *guard band* of the required band width and keeping the transmitting frequencies on one side of the guard band and the receiving frequencies on the other side.

(2) The receiving frequencies at a station must be well separated from each other to guard against receiver-to-receiver interference. Do this by operating the receivers so that at least one unused frequency channel separates the operating frequency of any two receivers. A typical frequency arrangement for an isolated route is shown in figure 55.

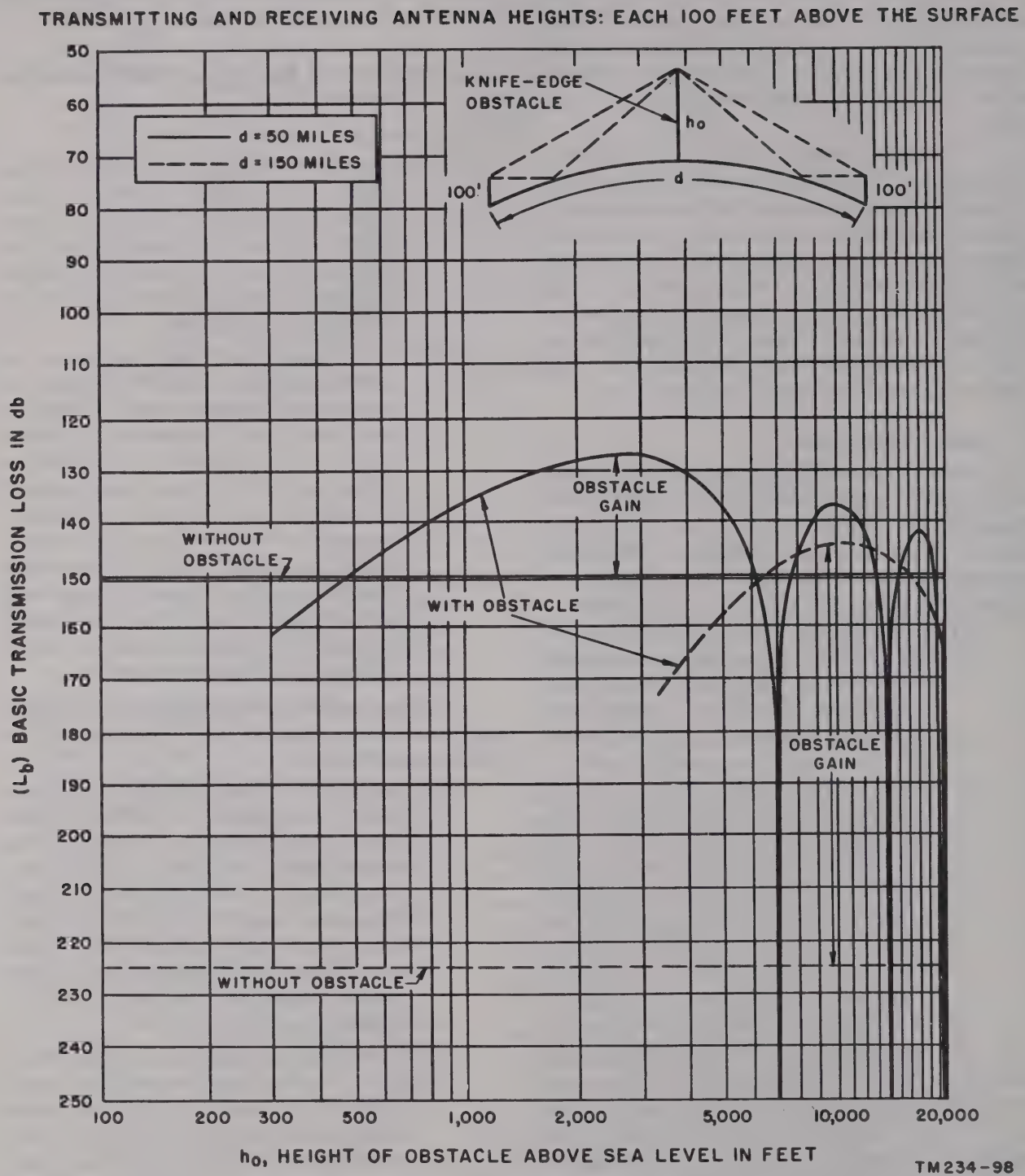

Figure 52. Theoretical obstacle gains at 100 mc.

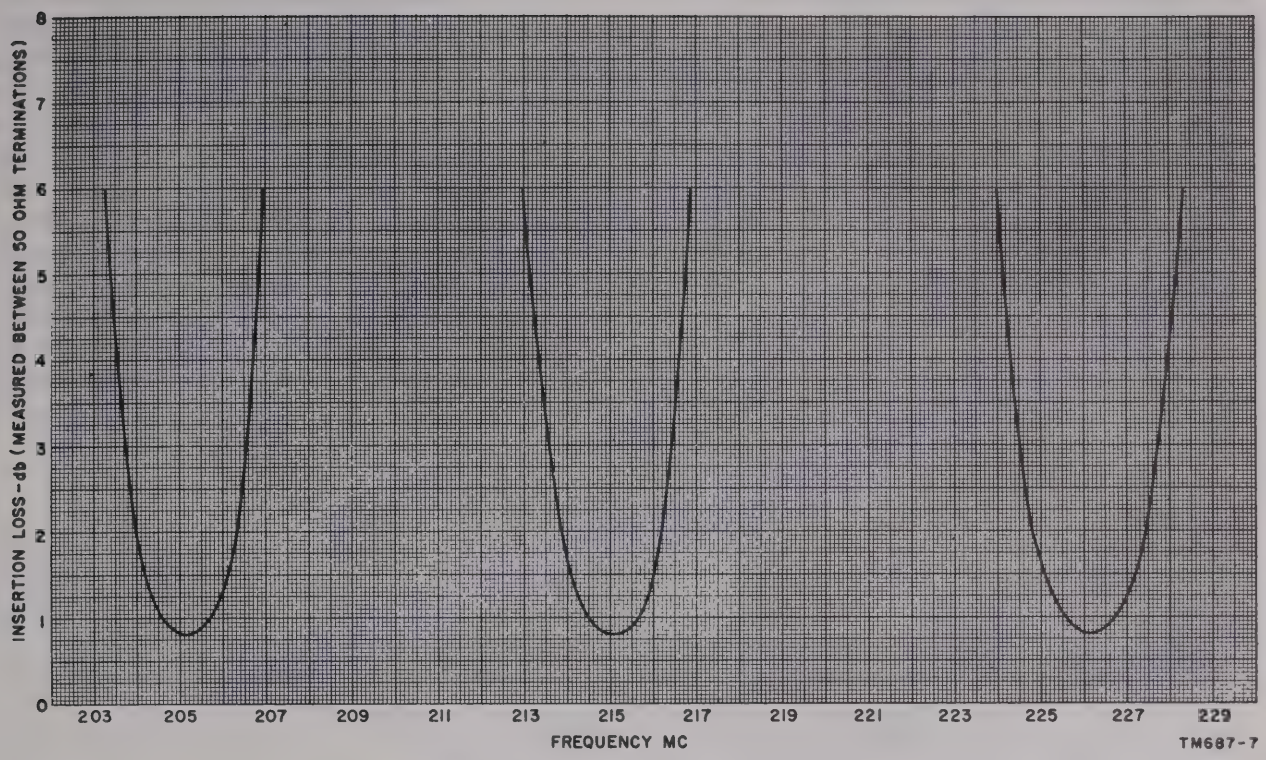

Figure 53. Representative characteristics of band-pass filters.

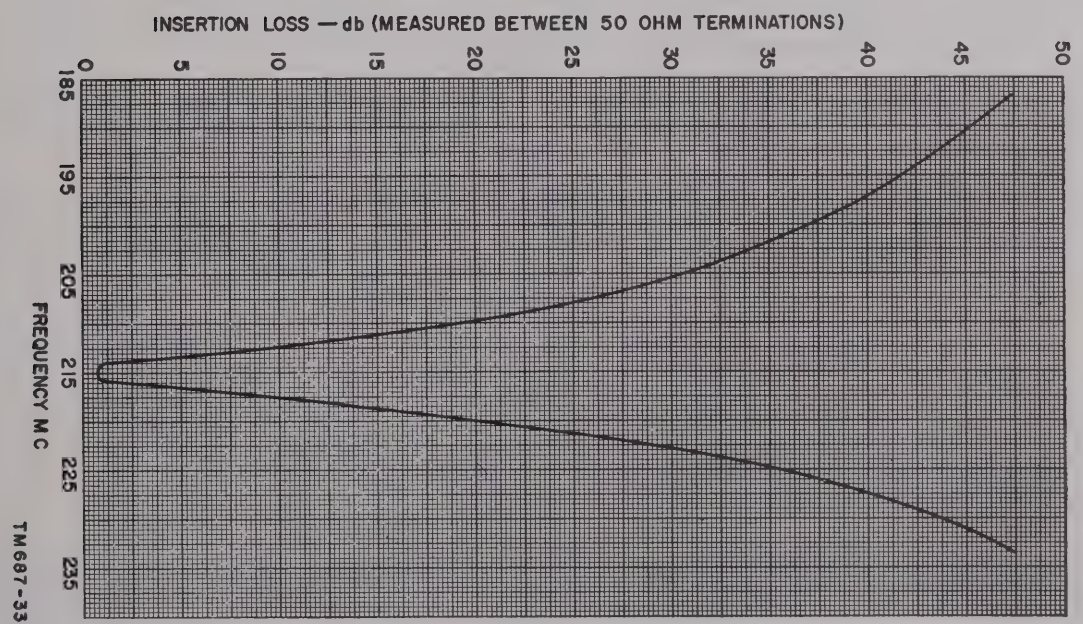

Figure 54. Characteristics of Band-Pass Filter F–197/U.

NOTE: f_1, f_3, f_5, ARE SEPARATED FROM f_{11}, f_{13}, f_{15}, BY A GUARD BAND

TM 687-71

Figure 55. Typical frequency arrangement for an isolated route.

(3) Tables I and II list general rules for minimum frequency separations for Radio Set AN/TRC–24 when used with band-pass filters. When suitable frequencies are obtained, these rules provide the simplest way of making frequency assignments. Table I can be used where fewer than four systems are operating in a small area and may be used where more systems are operating in the area. Table II gives the minimum frequency spacings that should be used, dependent upon the availability of frequency assignments, where four or more radio systems are operating in an area of approximately 1-mile radius.

Table I. Minimum Frequency Separation at a Given Station[a] (1–3 Radio Systems)

Antenna characteristics	Transmitter-receiver				Two receivers	
	On same mast		On different masts		With same polarization.	With opposite polarization.
	With same polarization*	With antenna cross-polarized (par. 57a).	Less than ¼ mile apart.	1 mile apart*		
Frequency separation (mc.)	8	3	3	2	2	1

[a] When used with band-pass filters and generally when used with band-pass filters only in the receiver.
[b] The antennas for transmitting and receiving on the same circuit at one end of any one jump are on the same mast.
[c] The 2-mc value applies to antennas separated by 1 mile of air-line distance over level earth.

Table II. Minimum Frequency Separation at a Given Station (4 or More Radio Systems)

Antenna characteristics	Transmitter-receiver						Two receivers		
	On same mast–	On same mast with antenna cross-polarized*		On different masts					
Band	B[b] C[b]	B[b]	C	Nearby[d]		1 mile apart[e]	B	C	B or C (oppositely polarized)
				B	C				
Frequency separation (mc)	18 28	10.5	11	10.5	11	3	1.5	2	1

[a] The antennas for transmitting and receiving on the same circuit at one end of any one jump are on the same mast.
[b] B-band, 100-225 mc; C-band, 225-400 mc.
[c] See paragraph 35 and 57a on polarization.
[d] Less than one-fourth of a mile.
[e] The 3-mc value applies to antenna separated by 1 mile of air-line distance over level earth.

c. Method for Avoiding Interference.

(1) The following method of choosing frequencies will give the greatest freedom of tactical action for an isolated route. (An isolated route is one which does not cross or connect with any other radio-relay routes.) Divide the frequency channels available for use into two *blocks* that contain equal numbers of frequencies. The *blocks* should be separated by a frequency interval at least as great as the required sepa-

ration between transmitter and receiver frequencies at one site (*b* above). This interval is the *wide guard band.* At each station, assign all transmitter frequencies to one block and all receiver frequencies to the other block. The oppositely directed arrows in the upper portion of figure 56 indicate that in any jump, frequencies in block A are oppositely directed to frequencies in block B. *Frog* the blocks as shown in the lower portion of the illustration. This method is called a *two-block method with wide guard band.*

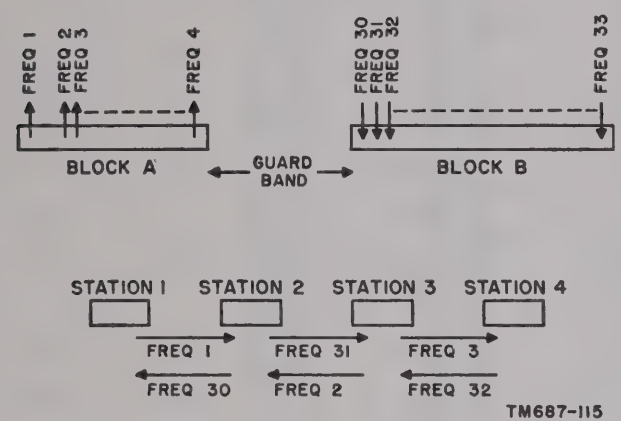

Figure 56. Two-block method of selecting frequencies.

(2) The following is an example of the two-block method with wide guard band. Suppose an isolated route is to consist of three jumps to be obtained by using the C-band (225–400 mc). The total number of rf channel assignments (1-mc wide) needed is $3 \times 2 = 6$. The planning officer should request six nonadjacent 1-mc channels, divided into two blocks of three channels each, and separated by at least 8 mc (tables I and II). Suppose the following frequency channels are assigned (the channel numbers are arbitrarily stated here): 27, 30, 38, 91, 95, and 101; then for each jump, the planning officer can pick any one of the frequency channels in the lower block and any one of the frequency channels in the higher block, these two frequency channels being used in opposite directions in the jump. No duplicate use of frequency channels should be made. If the planning officer is assigned two blocks separated by less than 8 mc, cross-polarization may be used (par. 57*a*).

d. Table of Frequency Channels. Select the operating frequencies and rf channels for each receiver and transmitter in the isolated radio route by using the information in *a* through *c* above and the chart below. Inform the attendant at each radio set in the system of the operating frequencies and corresponding rf channels for the transmitter and receiver.

Rf channel No.	Rf oscillator frequency (mc)	Pulsed-oscillator frequency (mc)	Band A (50–100 mc)	Band B (100–225 mc)	Band C (225–400 mc)	Band D (400–600 mc)
1	50.125	40.000	50.125	100.250		
2	50.375	60.500	50.375	100.750		
3	50.625	40.500	50.625	101.250		
4	50.875	61.000	50.875	101.750		
5	51.125	41.000	51.125	102.250		
6	51.375	61.500	51.375	102.750		
7	51.625	41.500	51.625	103.250		
8	51.875	62.000	51.875	103.750		
9	52.125	42.000	52.125	104.250		
10	52.375	62.500	52.375	104.750		
11	52.625	42.500	52.625	105.250		
12	52.875	63.000	52.875	105.750		
13	53.125	43.000	53.125	106.250		
14	53.375	63.500	53.375	106.750		
15	53.625	43.500	53.625	107.250		
16	53.875	64.000	53.875	107.750		
17	54.125	44.000	54.125	108.250		
18	54.375	64.500	54.375	108.750		
19	54.625	44.500	54.625	109.250		

Rf channel No.	Rf oscillator frequency (mc)	Pulsed-oscillator frequency (mc)	Band A (50–100 mc)	Band B (100–225 mc)	Band C (225–400 mc)	Band D (400–600 mc)
20	54.875	65.000	54.875	109.750		
21	55.125	45.000	55.125	110.250		
22	55.375	65.500	55.375	110.750		
23	55.625	45.500	55.625	111.250		
24	55.875	66.000	55.875	111.750		
25	56.125	46.000	56.125	112.250		
26	56.375	66.500	56.375	112.750	225.500	
27	56.625	46.500	56.625	113.250	226.500	
28	56.875	67.000	56.875	113.750	227.500	
29	57.125	47.000	57.125	114.250	228.500	
30	57.375	67.500	57.375	114.750	229.500	
31	57.625	47.500	57.625	115.250	230.500	
32	57.875	68.000	57.875	115.750	231.500	
33	58.125	48.000	58.125	116.250	232.500	
34	58.375	68.500	58.375	116.750	233.500	
35	58.625	48.500	58.625	117.250	234.500	
36	58.875	69.000	58.875	117.750	235.500	
37	59.125	49.000	59.125	118.250	236.500	
38	59.375	69.500	59.375	118.750	237.500	
39	59.625	49.500	59.625	119.250	238.500	
40	59.875	70.000	59.875	119.750	239.500	
41	60.125	50.000	60.125	120.250	240.500	
42	60.375	70.500	60.375	120.750	241.500	
43	60.625	50.500	60.625	121.250	242.500	
44	60.875	71.000	60.875	121.750	243.500	
45	61.125	51.000	61.125	122.250	244.500	
46	61.375	71.500	61.375	122.750	245.500	
47	61.625	51.500	61.625	123.250	246.500	
48	61.875	72.000	61.875	123.750	247.500	
49	62.125	52.000	62.125	124.250	248.500	
50	62.375	72.500	62.375	124.750	249.500	
51	62.625	52.500	62.625	125.250	250.500	
52	62.875	73.000	62.875	125.750	251.500	
53	63.125	53.000	63.125	126.250	252.500	
54	63.375	73.500	63.375	126.750	253.500	
55	63.625	53.500	63.625	127.250	254.500	
56	63.875	74.000	63.875	127.750	255.500	
57	64.125	54.000	64.125	128.250	256.500	
58	64.375	74.500	64.375	128.750	257.500	
59	64.625	54.500	64.625	129.250	258.500	
60	64.875	75.000	64.875	129.750	259.500	
61	65.125	55.000	65.125	130.250	260.500	
62	65.375	75.500	65.375	130.750	261.500	
63	65.625	55.500	65.625	131.250	262.500	
64	65.875	76.000	65.875	131.750	263.500	
65	66.125	56.000	66.125	132.250	264.500	
66	66.375	76.500	66.375	132.750	265.500	
67	66.625	56.500	66.625	133.250	266.500	
68	66.875	77.000	66.875	133.750	267.500	401.250
69	67.125	57.000	67.125	134.250	268.500	402.750
70	67.375	77.500	67.375	134.750	269.500	404.250
71	67.625	57.500	67.625	135.250	270.500	405.750
72	67.875	78.000	67.875	135.750	271.500	407.250
73	68.125	58.000	68.125	136.250	272.500	408.750
74	68.375	78.500	68.375	136.750	273.500	410.250

Rf channel No.	Rf oscillator frequency (mc)	Pulsed-oscillator frequency (mc)	Band A (50–100 mc)	Band B (100–225 mc)	Band C (225–400 mc)	Band D (400–600 mc)
75	68.625	58.500	68.625	137.250	274.500	411.750
76	68.875	79.000	68.875	137.750	275.500	413.250
77	69.125	59.000	69.125	138.250	276.500	414.750
78	69.375	79.500	69.375	138.750	277.500	416.250
79	69.625	59.500	69.625	139.250	278.500	417.750
80	69.875	80.000	69.875	139.750	279.500	419.250
81	70.125	60.000	70.125	140.250	280.500	420.750
82	70.375	80.500	70.375	140.750	281.500	422.250
83	70.625	60.500	70.625	141.250	282.500	423.750
84	70.875	81.000	70.875	141.750	283.500	425.250
85	71.125	61.000	71.125	142.250	284.500	426.750
86	71.375	81.500	71.375	142.750	285.500	428.250
87	71.625	61.500	71.625	143.250	286.500	429.750
88	71.875	82.000	71.875	143.750	287.500	431.250
89	72.125	62.000	72.125	144.250	288.500	432.750
90	72.375	82.500	72.375	144.750	289.500	434.250
91	72.625	62.500	72.625	145.250	290.500	435.750
92	72.875	83.000	72.875	145.750	291.500	437.250
93	73.125	63.000	73.125	146.250	292.500	438.750
94	73.375	83.500	73.375	146.750	293.500	440.250
95	73.625	63.500	73.625	147.250	294.500	441.750
96	73.875	84.000	73.875	147.750	295.500	443.250
97	74.125	64.000	74.125	148.250	296.500	444.750
98	74.375	84.500	74.375	148.750	297.500	446.250
99	74.625	64.500	74.625	149.250	298.500	447.750
100	74.875	85.000	74.875	149.750	299.500	449.250
101	75.125	65.000	75.125	150.250	300.500	450.750
102	75.375	85.500	75.375	150.750	301.500	452.250
103	75.625	65.500	75.625	151.250	302.500	453.750
104	75.875	86.000	75.875	151.750	303.500	455.250
105	76.125	66.000	76.125	152.250	304.500	456.750
106	76.375	86.500	76.375	152.750	305.500	458.250
107	76.625	66.500	76.625	153.250	306.500	459.750
108	76.875	87.000	76.875	153.750	307.500	461.250
109	77.125	67.000	77.125	154.250	308.500	462.750
110	77.375	87.500	77.375	154.750	309.500	464.250
111	77.625	67.500	77.625	155.250	310.500	465.750
112	77.875	88.000	77.875	155.750	311.500	467.250
113	78.125	68.000	78.125	156.250	312.500	468.750
114	78.375	88.500	78.375	156.750	313.500	470.250
115	78.625	68.500	78.625	157.250	314.500	471.750
116	78.875	89.000	78.875	157.750	315.500	473.250
117	79.125	69.000	79.125	158.250	316.500	474.750
118	79.375	89.500	79.375	158.750	317.500	476.250
119	79.625	69.500	79.625	159.250	318.500	477.750
120	79.875	90.000	79.875	159.750	319.500	479.250
121	80.125	70.000	80.125	160.250	320.500	480.750
122	80.375	90.500	80.375	160.750	321.500	482.250
123	80.625	70.500	80.625	161.250	322.500	483.750
124	80.875	91.000	80.875	161.750	323.500	485.250
125	81.125	71.000	81.125	162.250	324.500	486.750
126	81.375	91.500	81.375	162.750	325.500	488.250
127	81.625	71.500	81.625	163.250	326.500	489.750
128	81.875	92.000	81.875	163.750	327.500	491.250
129	82.125	72.000	82.125	164.250	328.500	492.750

Rf channel No.	Rf oscillator frequency (mc)	Pulsed-oscillator frequency (mc)	Band A (50–100 mc)	Band B (100–225 mc)	Band C (225–400 mc)	Band D (400–600 mc)
130	82.375	92.500	82.375	164.750	329.500	494.250
131	82.625	72.500	82.625	165.250	330.500	495.750
132	82.875	93.000	82.875	165.750	331.500	497.250
133	83.125	73.000	83.125	166.250	332.500	498.750
134	83.375	93.500	83.375	166.750	333.500	500.250
135	83.625	73.500	83.625	167.250	334.500	501.750
136	83.875	94.000	83.875	167.750	335.500	503.250
137	84.125	74.000	84.125	168.250	336.500	504.750
138	84.375	94.500	84.375	168.750	337.500	506.250
139	84.625	74.500	84.625	169.250	338.500	507.750
140	84.875	95.000	84.875	169.750	339.500	509.250
141	85.125	75.000	85.125	170.250	340.500	510.750
142	85.375	95.500	85.375	170.750	341.500	512.250
143	85.625	75.500	85.625	171.250	342.500	513.750
144	85.875	96.000	85.875	171.750	343.500	515.250
145	86.125	76.000	86.125	172.250	344.500	516.750
146	86.375	96.500	86.375	172.750	345.500	518.250
147	86.625	76.500	86.625	173.250	346.500	519.750
148	86.875	97.000	86.875	173.750	347.500	521.250
149	87.125	77.000	87.125	174.250	348.500	522.750
150	87.375	97.500	87.375	174.750	349.500	524.250
151	87.625	77.500	87.625	175.250	350.500	525.750
152	87.875	98.000	87.875	175.750	351.500	527.250
153	88.125	78.000	88.125	176.250	352.500	528.750
154	88.375	98.500	88.375	176.750	353.500	530.250
155	88.625	78.500	88.625	177.250	354.500	531.750
156	88.875	99.000	88.875	177.750	355.500	533.250
157	89.125	79.000	89.125	178.250	356.500	534.750
158	89.375	99.500	89.375	178.750	357.500	536.250
159	89.625	79.500	89.625	179.250	358.500	537.750
160	89.875	100.000	89.875	179.750	359.500	539.250
161	90.125	80.000	90.125	180.250	360.500	540.750
162	90.375	100.500	90.375	180.750	361.500	542.250
163	90.625	80.500	90.625	181.250	362.500	543.750
164	90.875	101.000	90.875	181.750	363.500	545.250
165	91.125	81.000	91.125	182.250	364.500	546.750
166	91.375	101.500	91.375	182.750	365.500	548.250
167	91.625	81.500	91.625	183.250	366.500	549.750
168	91.875	102.000	91.875	183.750	367.500	551.250
169	92.125	82.000	92.125	184.250	368.500	552.750
170	92.375	102.500	92.375	184.750	369.500	554.250
171	92.625	82.500	92.625	185.250	370.500	555.750
172	92.875	103.000	92.875	185.750	371.500	557.250
173	93.125	83.000	93.125	186.250	372.500	558.750
174	93.375	103.500	93.375	186.750	373.500	560.250
175	93.625	83.500	93.625	187.250	374.500	561.750
176	93.875	104.000	93.875	187.750	375.500	563.250
177	94.125	84.000	94.125	188.250	376.500	564.750
178	94.375	104.500	94.375	188.750	377.500	566.250
179	94.625	84.500	94.625	189.250	378.500	567.750
180	94.875	105.000	94.875	189.750	379.500	569.250
181	95.125	85.000	95.125	190.250	380.500	570.750
182	95.375	105.500	95.375	190.750	381.500	572.250
183	95.625	85.500	95.625	191.250	382.500	573.750
184	95.875	106.000	95.875	191.750	383.500	575.250

Rf channel No.	Rf oscillator frequency (mc)	Pulsed-oscillator frequency (mc)	Band A (50–100 mc)	Band B (100–225 mc)	Band C (225–400 mc)	Band D (400–60 0mc)
185	96.125	86.000	96.125	192.250	384.500	576.750
186	96.375	106.500	96.375	192.750	385.000	578.250
187	96.625	86.500	96.625	193.250	386.500	579.750
188	96.875	107.000	96.875	193.750	387.500	581.250
189	97.125	87.000	97.125	194.250	388.500	582.750
190	97.375	107.500	97.375	194.750	389.500	584.250
191	97.625	87.500	97.625	195.250	390.500	585.750
192	97.875	108.000	97.875	195.750	391.500	587.250
193	98.125	88.000	98.125	196.250	392.500	588.750
194	98.375	108.500	98.375	196.750	393.500	590.250
195	98.625	88.500	98.625	197.250	394.500	591.750
196	98.875	109.000	98.875	197.750	395.500	593.250
197	99.125	89.000	99.125	198.250	396.500	594.750
198	99.375	109.500	99.375	198.750	397.500	596.250
199	99.625	89.500	99.625	199.250	398.500	597.750
200	99.875	110.000	99.875	199.750	399.500	599.250
201	100.125	90.000	----------	200.250		
202	100.375	110.500	----------	200.750		
203	100.625	90.500	----------	201.250		
204	100.875	111.000	----------	201.750		
205	101.125	91.000	----------	202.250		
206	101.375	111.500	----------	202.750		
207	101.625	91.500	----------	203.250		
208	101.875	112.000	----------	203.750		
209	102.125	92.000	----------	204.250		
210	102.375	112.500	----------	204.750		
211	102.625	92.500	----------	205.250		
212	102.875	113.000	----------	205.750		
213	103.125	93.000	----------	206.250		
214	103.375	113.500	----------	206.750		
215	103.625	93.500	----------	207.250		
216	103.875	114.000	----------	207.750		
217	104.125	94.000	----------	208.250		
218	104.375	114.500	----------	208.750		
219	104.625	94.500	----------	209.250		
220	104.875	115.000	----------	209.750		
221	105.125	95.000	----------	210.250		
222	105.375	115.500	----------	210.750		
223	105.625	95.500	----------	211.250		
224	105.875	116.000	----------	211.750		
225	106.125	96.000	----------	212.250		
226	106.375	116.500	----------	212.750		
227	106.625	96.500	----------	213.250		
228	106.875	117.000	----------	213.750		
229	107.125	97.000	----------	214.250		
230	107.375	117.500	----------	214.750		
231	107.625	97.500	----------	215.250		
232	107.875	118.000	----------	215.750		
233	108.125	98.000	----------	216.250		
234	108.375	118.500	----------	216.750		
235	108.625	98.500	----------	217.250		
236	108.875	119.000	----------	217.750		
237	109.125	99.000	----------	218.250		
238	109.375	119.500	----------	218.750		
239	109.625	99.500	----------	219.250		

Rf channel No.	Rf oscillator frequency (mc)	Pulsed-oscillator frequency (mc)	Band A (50–100 mc)	Band B (100–225 mc)	Band C (225–400 mc)	Band D (400–600 mc)
240	109.875	120.000	----------	219.750		
241	110.125	100.000	----------	220.250		
242	110.375	120.500	----------	220.750		
243	110.625	100.500	----------	221.250		
244	110.875	121.000	----------	221.750		
245	111.125	101.000	----------	222.250		
246	111.375	121.500	----------	222.750		
247	111.625	101.500	----------	223.250		
248	111.875	122.000	----------	223.750		
249	112.125	102.000	----------	224.250		
250	112.375	122.500	----------	224.750		

53. Selection of Operating Frequencies at Multiple Terminal and Repeater Points

a. General.

(1) An effect that is important, chiefly when a number of radio equipments are located at one site, is cross-modulation. Power from one transmitter entering the antenna of another may result in cross-modulation. New frequencies produced may fall into the rf channel frequency range of a receiver at the same site. Similarly, power from two nearby transmitters may enter the rf stages of a receiver tuned to another frequency, cross-modulate in this receiver, and produce new frequencies in the receiver. Such effects are most apt to be serious when all the frequencies concerned are close; under these conditions, there is little selectivity available to help reject them. A typical case is when two frequencies A and B produce others, 2A–B or 2B–A, which fall in the frequency range near the tuned frequency of the receiver. Additional transmitters operating at a given site increase the possibilities of cross-modulation.

(2) The use of band-pass filters in the receiver and transmitter will reduce cross-modulation. Assume that two transmitters at a site are operating at frequencies A and B and a receiver at the same site is operating at or near 2A–B. If band-pass filters are not used, the output power of transmitter A enters the output of transmitter B, and cross-product 2A–B is radiated. This product is received by the receiver that is operating at or near this frequency, thereby producing interference. With a band-pass filter tuned to frequency B, the output power from transmitter A is attenuated as much as 45 db by the filter as the frequency enters the output of transmitter B. Product 2A–B is attenuated as much as 45 db as it leaves transmitter B. Thus, the band-pass filter produces up to 90 db attenuation, which reduces the interference. A band-pass filter in the receiver would not eliminate interference from this source, because the filter would be tuned to the same frequency (2A–B) as the receiver. A band-pass filter in a receiver reduces the production of cross-products within the receiver and improves the selectivity and image suppression of the receiver.

(3) It is theoretically possible to select the individual frequencies so that none of the principle unwanted cross-products are close to any receiver frequency. However, this is a time-consuming process that requires the particular frequency combinations to be available, and usually results in a setup that is inflexible for changing layouts.

(4) A general plan that will guard against the worst cross-modulation effects is to provide good frequency separation between transmitting and receiving frequencies at a site.

b. Selection of Operating Frequencies. Select the operating frequencies and rf channels for each receiver and transmitter; use the information given in paragraph 52. Be sure to provide proper frequency separation between transmitting and receiving frequencies at a site to guard against cross-modulation effects. Tell the attendant at each radio set in the system the operating frequencies and operating frequency channels of his transmitter and receiver.

54. Selection of Operating Frequencies for Parallel Systems

The troubles that are usual in parallel systems are the same as those encountered at multiple terminal and repeater points (par. 53). To minimize interference, use the procedure outlined in *a* through *f* below for arranging the frequency layout on a vhf route that contains parallel systems.

a. Determine the number of rf channels needed for each system on the route by using the two-block procedure (par. 52*c*). Allow for expected traffic growth on the route.

b. Work out a tentative frequency plan according to the principles given in paragraph 52*d*.

c. Request the necessary rf channels from the assignment authority. The rf channels assigned may differ from those requested.

d. Work out a frequency plan with the assigned rf channels (par. 52). If available plans lead to difficulties, use such expedients as applicable (par. 57). If there still is trouble, try to obtain frequency assignment changes from the assignment authority.

e. As soon as the radio systems are set up, operate them to see whether they are free of interference.

f. When a new radio system is set up, try it with the existing systems to see whether there is mutual interference.

55. Selection of Operating Frequencies for Interconnecting or Crossing Systems

When planning a great number of radio systems that interconnect or cross at various points, the two-block method of planning (par. 52) can be used. The general difficulty that occurs when using the two-block method of planning for interconnecting or crossing systems is that both the transmitting and receiving frequencies planned for a site fall into the same block. This may result in transmitter-to-receiver interference at the site. If the frequency channels on one of the routes are reassigned, the difficulty frequently clears up at one station, only to reappear at another station. Expedients can sometimes be worked out, but as soon as the military situation changes, the difficulty is apt to reappear, forcing another set of frequency changes and another set of expedients. Three different plans for solving the difficulties encountered with interconnecting or crossing systems are given in paragraph 56. The difficulties of interconnecting or crossing radio systems are shown by three sample situations as follows:

a. Triangle Situation. Figure 57 shows three radio stations connected by three single-jump radio systems. Suppose only two blocks of frequencies, A and B, are available.

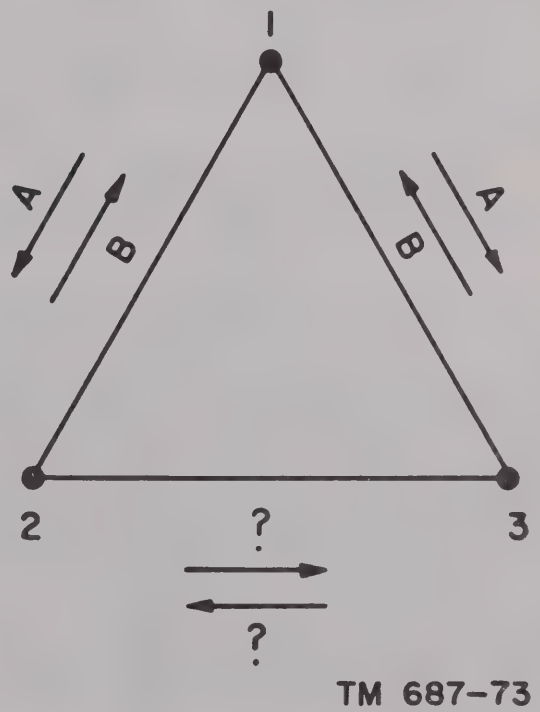

Figure 57. Triangle solution.

(1) If, at station 1, all the transmitting frequencies are assigned to block A and all the receiving frequencies are assigned to block B, then:

(2) At stations 2 and 3, transmitting frequencies are in block B and receiving frequencies are in block A.

(3) With only blocks A and B available, there is no simple way of planning interference-free radio communication between stations 2 and 3.

(4) Trial and error planning could be used with first one selection of frequencies and then another, but this is time-consuming and may in the end fail.

b. Odd-and-Even Situation. The odd-and-even situation (fig. 58) is similar to the triangle situation (*a* above). Figure 58 shows alternate routes between radio stations 4 and 8. One of the routes contains an odd number of jumps and the other an even number. Obviously, there is a difficulty similar to that in the triangle situation that would arise. Stations 4 and 8 need not be terminals and there need be no through circuits from station 4 to station 8 to have this difficulty occur.

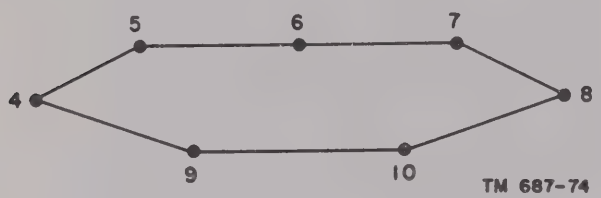

Figure 58. Odd-and-even situation.

c. Reentrancy Situation. The reentrancy situation occurs when at a given station the same group of frequencies are used for transmitting on one route and receiving on another. At this station, the communication network is reentrant. Reentrancy can be avoided by replacing a radio system by wire on the route or routes that cause the reentrancy, so that the group of frequencies which are reentrant are used only for transmitting, or only for receiving at the station. The reasons that lead to a choice of radio over wire in the first place often oppose replacement of radio by wire to clear up reentrancy.

56. Plans for Solving Difficulties Encountered with Interconnecting or Crossing Radio Systems

Three plans to solve difficulties with interconnecting or crossing radio systems are given in *a* through *c* below. The type of plan for an area should be chosen before making rf channel assignments to particular routes in the area. It will help in planning if this area includes the whole theater.

a. Six-Block Abm Plan.

(1) *Advantages.* The abm plan is based on a method for dividing a broad frequency region (all or a large part of a band allocated) into six frequency blocks of suitable widths. Rf channels obtained are divided approximately equally among the blocks. The basic planning is then done in terms of these blocks. This results in the following advantages:

(*a*) Any station can be connected with nearly any other station with a minimum effect on the rest of the network.

(*b*) Planning is simplified.

(*c*) Quick changes are accomplished simply.

(*d*) Guard blocks at one station are used for frequency assignments at some other station, so that none of the frequency space allocated has to be barred from use.

(*e*) It is not necessary to use rf channels scattered over the total band.

(2) *Description.*

(*a*) *Block widths.* For simplicity, consider first the case where the six frequency blocks are contiguous; that is, there is no frequency space between them. The width of each block must then be at least as great as the required transmitter-to-receiver frequency separation for the type of radio-relay system in question (par. 52*b*). Therefore, if any block is not used at a particular station, it will serve as a wide guard band sufficient to prevent transmitter-to-receiver interference at that station. This wide guard band block will be used at other stations in the abm plan.

(*b*) *Abm blocks.* At the top of figure 59 are shown the six frequency blocks I through VI. At the side of figure 59 are shown three ways of using these blocks, namely: *a*, *b*, and *m*. The use of the symbols *a*, *b*, and *m* is helpful in planning. One of these symbols is assigned to each radio

station. This symbol identifies the group of frequencies that may be used to transmit at that station and the group that may be used to receive. Particular transmitting and receiving rf channels for each station are then selected from these respective groups. For example, when way *a* is used at a particular station, then, as shown in figure 59, frequencies that lie in block I or II can be used as transmitting frequencies at that station, and frequencies that lie in block IV or V can be used as receiving frequencies at that station. When way *b* is used at a radio station one jump away, frequencies in block II or III can be used there as receiving frequencies and those in block V or VI as transmitting frequencies. Thus, in a single jump between a station labeled *a* and one labeled *b*, frequencies in block II can be used to transmit from *a* to *b*, and those in block V can be used to transmit from *b* to *a*. Similarly, if the symbol *m* is assigned to a third station that is one jump from *a* on another route, frequencies in block I can be used to transmit from *a* to *m*, and those in block IV can be used to transmit from *m* to *a*.

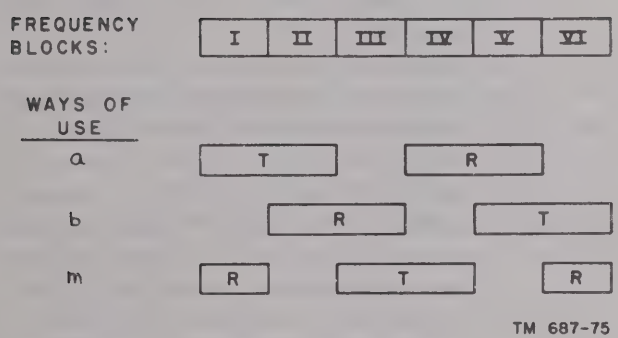

Figure 59. Abm plan.

(*c*) *Application to triangle situation.* This situation is shown in figure 60. To solve it, start by writing the letters *a*, *b*, and *m*, at the three stations. This automatically results in assigning frequency blocks as shown in figure 60; then, any available rf channels in those blocks may be assigned as shown, without creating any transmitter-to-receiver interference. The particular rf channels assigned are chosen from the available rf channels so that the rules for separation between receiving frequencies at a station (par. 51) are observed. Thus, the *abm* plan solves the transmitter-to-receiver interference problem automatically.

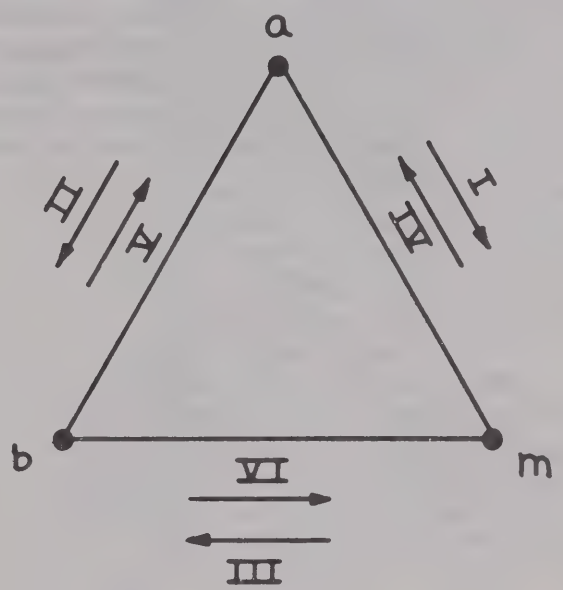

Figure 60. Abm solution of triangle situation.

(*d*) *Assignment of specific rf channels.* The following is an example of how specific rf channels are assigned according to the abm plan. Suppose that in the triangle situation two parallel radio systems are required in the B-band (100 to 225 mc) on each jump. Use the symbolic solution shown in figure 60 and request two channels at least 2 mc apart (par. 52*b*) in each of blocks I to VI. Suppose rf channels 3, 12, 45, 48, 90, 96, 132, 165, 168, 204, 210, and 213 are assigned. Channels 45 and 48 are separated by only 1.5 mc, as are channels 165 and 168. These pairs of channels may be used, although their separation is less than

2 mc, by the use of cross-polarization (par. 57*a*). Thus, channel 45 may be vertically polarized and channel 48 may be horizontally polarized. Similarly, channels 165 and 168 may be cross-polarized. Figure 61 illustrates how these rf channels are arranged. They can be paired in the two circuits in any way desired. Again, suppose that interference from some unknown source, not traceable, appeared in rf channel 3, so that a substitute channel was needed. Any other available channel in block I, except channels 10, 11, 13, or 14 (which are too close to channel 12), could be substituted without affecting the rest of the network.

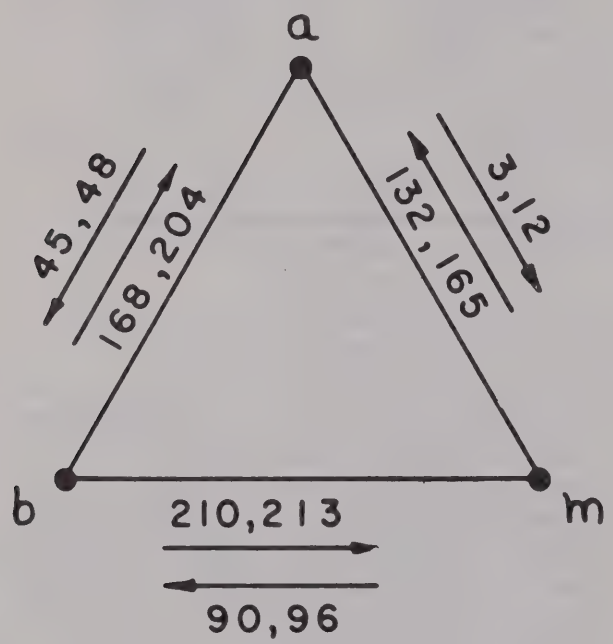

Figure 61. Sample channels for triangle situation.

(*e*) *Application to the odd-and-even situation.* Two different ways of assigning abm symbols to solve the odd-and-even situation are shown on figure 62. When using the abm plan for the odd-and-even situation, write out the frequency block layouts corresponding to each of ways *a*, *b*, and *m*. Also determine at least one other way of assigning abm symbols to solve the odd-and-even situation. The frequency blocks are automatically arranged to avoid difficulty in choosing rf channels for any cross-links that may be desired between two radio systems.

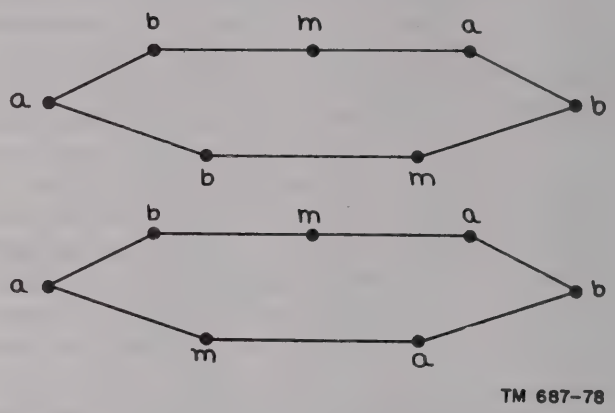

Figure 62. Abm solution of odd-and-even situation.

(*f*) *Application to large layout.* As a further example, a sample large layout is shown on figure 63. Only one of many possible ways of assigning abm symbols is shown. In practice, some of the jumps would be wire instead of radio, or wire paralleled by a radio system. Also, different kinds of radio sets would be used in various places; and additional jumps would probably exist, such as to supply points or to other headquarters.

(*g*) *Noncontiguous blocks.* The edges of successive frequency blocks need not touch each other. The difference between the top frequency used in any block and the bottom frequency used in the block (which is two blocks above it and separated by one other block) should be at least as great as the required transmitter-to-receiver frequency separation. This method assures the required guard band (par. 52*b*).

(h) *Multiples of six blocks.* If adjacent broad bands of frequencies are divided into six blocks each to use the *abm* plan in each broad band of frequencies, the arrangement for the

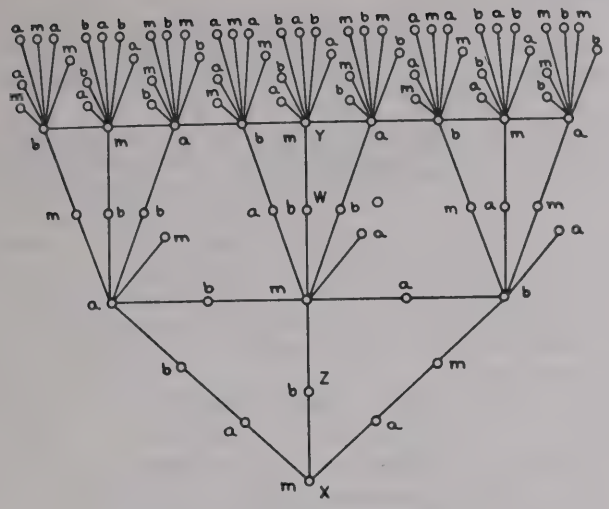

NOTES:
1. O INDICATES RADIO RELAY STATION (INTERMEDIATE OR TERMINAL).
2. O—O INDICATES A HOP WITH ITS TWO STATIONS.
3. EACH SYMBOL a, b, m, OF THE BLOCK, APPLIES TO THE STATION NEXT TO IT.

TM 687-407

Figure 63. Sample abm solution of large network.

first six blocks should be repeated in the next six (block VII would be like I, and so on). Do this to avoid transmitter-to-receiver interference at the common edge of the two broad bands of frequencies.

(*i*) *Application to different types of radio-relay sets.* If the frequency widths of the blocks are properly chosen, different types of radio-relay sets can share the blocks.

(3) *Ways of decreasing necessary block width.*

(*a*) *General.* In the six-block *abm* plan (for general application in an area), expedients to decrease the block width are more difficult to attain than they are in a simple application to a particular route. Many of the expedients decrease flexibility, and the object of the six-block *abm* plan is flexibility. The expedients that can be used to decrease the necessary block width are given in (*b*) through (*d*) below.

(*b*) Pairing of transmitter and receiver rf channels can be used for either the *abm* plan, double *abm* plan (*b* below), or the *xy* plan (*c* below). The procedure used is to assign the frequencies in pairs: the lowest frequency in a transmitting block at a station is paired with the lowest frequency in a receiving block. This is called pair 1 and is assigned to one radio set at a station. The next lowest frequency in a transmitting block is paired with the next lowest frequency in the receiving block and called pair 2. This pair is assigned to another radio set at the same station. The same method is used for all the frequencies in the transmitting and receiving blocks at a station. By the use of paired frequencies, the separation of transmitting and receiving frequencies of a jump is greater than that of the block serving as the wide guard band. Thus, the width of the blocks may be reduced.

(*c*) *Cross-polarization.* If the frequency width of a particular block is to be reduced by use of cross-polarization (par. 57), the frequencies in the block immediately below it should be polarized oppositely to those in the block immediately above it. Using this method to reduce the frequency width of all the blocks in two adjacent six-block units is given in the chart below:

Cross-polarization chart

	Six-block unit						Adjacent six-block unit					
Block	I	II	III	IV	V	VI	I′	II′	III′	IV′	V′	VI′
Polarization	H	H	V	V	H	H	V	V	H	H	V	V

(*d*) *Geographical separation of antennas.* Physical separation of antennas should be used only when necessary to reduce block width in last-minute planning or in field rearrangement when interference is experienced (par. 57).

b. Double Abm Plan.

(1) *Purpose.* If the traffic load on a particular route is to great that, with the rf channels available, use of the abm plan becomes difficult, the double abm plan should be used.

(2) *Explanation of plan.*

(*a*) The double abm plan uses the same six frequency blocks as the single abm plan. The double abm plan uses ways *a, b,* and *m* of employing these blocks, and also three more ways, *a′, b′,* and *m′*. Figure 3 shows all six ways and also that a station labeled *a* can communicate with a station one jump away labeled *a′*. Four of the six frequency blocks can be used for communication between *a* and *a′* (two blocks in each direction). Thus, a heavy traffic route could be made up of radio stations labeled *a, a′, a, a′,* and so forth. Similarly, *b* and *b′*, or *m* and *m′*, could be used.

(*b*) Suppose that symbol *a* is assigned to a particular station S. Then, on a heavy traffic route, the station one jump away from S could be assigned *a′*. On a lighter traffic route, the station one jump away from S could be assigned *b* or *m*.

(*c*) The series of symbols with prime and nonprime letters (*a, a′* or *b, b′* or *m, m′*) does not have to be used for heavy traffic routes only. However, the single *abm* series or the single *a′, b′, m′* series is better for the lighter traffic routes because it permits a greater number of interconnections.

(*d*) A route can be made up partly of one series of symbols and partly of another, such as *a′, a, b′, m′*. Symbol shifts of this kind help in making interconnections.

(3) *Example.* As one illustration of the double *abm* plan, consider the case previously worked out in figure 63. If the route from X to Y in this figure were required to carry more traffic than could be handled with available *abm* frequencies, the double *abm* plan could be used on this route merely by changing *b* to *m′* at stations Z and W.

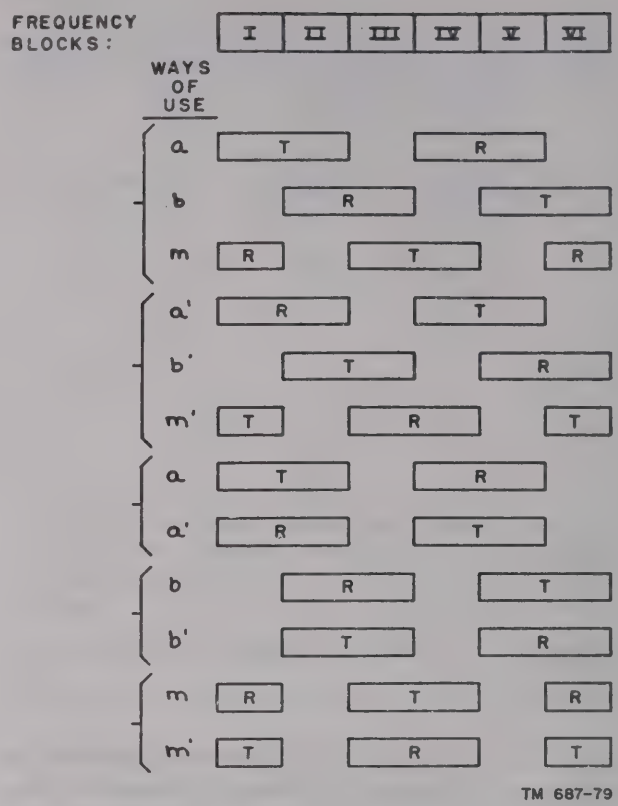

Figure 64. The double abm plan.

c. Xy Plan.

(1) *Purpose.* The *xy* plan is used when planning a very heavy traffic route. This plan is not as flexible as the previous plans (*abm* and double *abm*), and for flexibility, it relies on interconnection with them. Interconnection betwen the *xy* plan and the *abm* or double *abm* plan can be worked out by the planning officer if needed.

(2) *Explanation of plan.*

(*a*) The *xy* plan uses the same six frequency blocks as the *abm* and double *abm* plans (fig. 65). Stations labeled *x* and *y* can communicate with each other (without mutual interference) by using rf channels

in four frequency blocks (two in each direction).

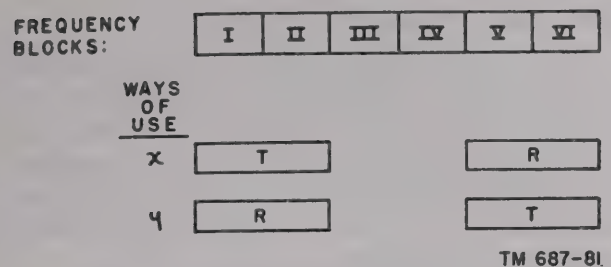

Figure 65. The xy plan.

(*b*) If *adjacent* broad bands of frequencies are divided into six blocks each, to avoid transmitter-to-receiver interference in using blocks VI and VII, then a station using way *x* in one of the broad bands of frequencies should use way *y* in the *adjacent* broad band, and vice versa. This would practically eliminate interconnection possibilities with *abm* plans, if both *xy* and *abm* plans were used in both of the broad bands of frequencies. Such a problem could be avoided by placing a guard band between the two broad bands of frequencies and by using way *x* at the same stations in both bands, or by using the *xy* plan in only one of the two broad bands of frequencies.

57. Advantages of Using Cross-Polarization, Separate Masts, and Antenna Directivity

a. Cross-Polarization. Sometimes antennas on the same or neighboring antenna masts may be cross-polarized to advantage. Cross-polarization consists of having one antenna polarized in one plane (horizontal or vertical) and the other antenna polarized in the other plane (par. 35). Cross-polarization results in a greater loss between antennas on the same or neighboring masts and permits the frequency separation between transmitting and receiving frequencies on these antennas to be much smaller than with noncross-polarized antennas. The resulting advantage of cross-polarization is shown on the tables given in paragraph 52*b*.

Note. Cross-polarization should not be used unless frequency allocations are strict because a system using cross-polarization must be set up carefully to guarantee that a receiving antenna is polarized the same way as the transmitting antenna at the other end of the jump.

b. Separate Masts. Use of separate masts for transmitters and receivers at a station will reduce the transmitter-to-receiver interference at that station. Roughly, the interfering voltage at the receiver input will be inversely proportional to the distance between antennas, and, therefore, the loss in the unwanted path will increase 6 db for each doubling of this distance. If separate masts are used, the different antennas can be directed in different directions (*c* below).

c. Antenna Directivity. When the receiving and transmitting antennas are mounted on different masts (*b* above), the directivity characteristics of the antennas can be used to reduce crosstalk and mutual interference. Refer to figure 154 for representative antenna directivity patterns. These directivity patterns are plotted in field strength (volts).

58. Field Methods of Minimizing Interference when Encountered

a. Physical separation of transmitters from receivers at a station will reduce transmitter-to-receiver interference at that station.

b. Separation of transmitting from receiving antennas of a given radio set may reduce the mutual interference. To do this, the radio-frequency lead-in cable must be longer. This results in greater rf losses, and subtracts from the allowable path loss (par. 44).

c. Transmitting and receiving antennas at a radio-relay station sometimes can be separated by repeater-splitting to reduce mutual interference. Repeater-splitting means that at a radio-relay station (assuming east and west directions of transmission and reception) the east-looking and west-looking halves of the station are separated, and connected to each other by spiral-four cable. The length of spiral-four cable that can be used in a radio system is given in paragraph 59. Repeater-splitting requires more personnel than a conventional radio-relay installation, and should be avoided if possible.

d. If possible, the antennas for different systems at a radio station should be well-separated laterally. This will reduce mutual interference between these systems.

e. At multiple radio-terminal points, radio systems should be separated physically if possible by dividing them into groups and placing the groups in different combinations of antennas (parks). For example, at a given station, radio systems on different routes might be placed in different parks.

f. If physical separation of radio systems does not eliminate mutual interference sufficiently, the frequencies that are interacting should be separated (see *abm,* double *abm,* or *xy* plan in par. 56). A procedure that may be followed to determine which frequencies at a site are mutually interfering is described in *g* below.

g. To determine the mutually interfering frequencies, first determine at which site (receiver) in the radio system the interference is entering the system ((1) below). Next determine which frequencies at that site are causing the interference ((2) below).

(1) In sequence, turn off each receiver that affects transmissions in the direction in which interference is encountered. Start with the receiver farthest from the end of the telephone system where interference is observed, and progress toward that end of the system. Thus, if the interference is noted at the end of the telephone system that contains telephone terminal A, each receiver affecting B–to–A transmissions is turned off in sequence starting with the receiver at the radio-relay site farthest from telephone terminal A. If turning off a particular receiver causes the interference to disappear, the interference was entering the system at the site of that receiver. Turn on all receivers.

(2) If the tactical situation permits, turn off and on each of the transmitters at that site in turn. Maintain order-wire communication with the telephone terminal at which the interference is observed. Note which transmitter is off each time the interference disappears. These are the mutually interfering transmitters. The interference may be cleared by shifting the frequency of one or both interfering transmitters or by shifting the receiver frequency.

59. Use of Spiral-Four Cable

a. General. Spiral-four cable may connect the terminals of the radio system and the adjacent telephone equipment, which may be some distance apart. The reasons for inserting spiral-four cable in a radio system are given in *b* below. The limitations of spiral-four cable are given in *c* below.

b. Reasons for Using Spiral-Four Cable.

(1) Normally, the telephone terminal is placed near its switchboard. This shortens the length of the voice-frequency circuit between the telephone terminal and the switchboard. The switchboard, however, is often not at a good radio-antenna site, and to place the radio sets at a great distance from their antennas would cause an excessive rf loss in the rf lead-in cable. Therefore, it is preferable to place the telephone terminal near the associated switchboard, the radio terminal at a good radio-antenna site, and connect the telephone terminal and radio terminal with spiral-four cable.

(2) At a radio-relay point, the best site for transmission in one direction may be different from the best site for transmission in the other direction. For example, the two sites desired might be on opposite sides of a hill. Therefore, it may be preferable to use the two best sites and connect the two radio sets with spiral-four cable.

(3) Certain sites may not have enough area for the antennas needed for a radio-relay set. Therefore, new sites must be found nearby for some of the antennas, and the radio sets separated and connected with spiral-four cable.

c. Limitations on Use of Spiral-Four Cable.

(1) *General.* If the total length of spiral-four cable in a radio system is excessive, the traffic signals at the outputs of the system will be either too noisy or distorted.

(*a*) If the gain of the radio sets is increased to overcome the losses

caused by the spiral-four cable, distortion of the signal will result from the long lengths of spiral-four cable. Spiral-four cable attenuates some frequencies more than others; the radio sets amplify all signals equally (flat). Unequal attenuation caused by the spiral-four cable and too much flat amplification from the radio sets will result in intolerable distortion.

(*b*) The total length of spiral-four cable in a radio system also includes the lengths of cable that connect the two terminals of the radio system to the associated telephone equipment.

(2) *Loss caused by cable length.* If four-channel telephone equipment (AN/TCC–3) is used with the radio system, loaded spiral-four cable is used. If 12-channel telephone equipment (AN/TCC–7) is used with the radio system, nonloaded spiral-four cable is used. The cable loss chart below summarizes the loss values for *loaded* and *nonloaded* cable in the base-band frequency range.

Cable loss chart
Loss per mile in db, of spiral-four cable CX–1065/G

Frequency (kc)	1	12	20	28	60	68
Loaded	.71	.77	.83			
Nonloaded	1.2	2.8	3.0	3.2	3.8	4.0

(3) *Limitations when using AN/TCC–3* equipment. The gain adjustment for the radio set when used with AN/TCC–3 telephone equipment is normally made at 1 kc. When this adjustment is made, the drop in level at the top frequency of (20 kc) is only .83 — .71 = .12 db per mile of cable. There can be several miles of cable ahead of the last radio transmitter before the drop in level becomes important; 8 miles amounts to approximately 1-db loss. In any radio section, the total length of spiral-four cable from an AN/TCC–3 or AN/TCC–5 to the most distant radio transmitter should not exceed 5 miles for each direction of transmission. With the older-type of spiral-four cable, the loss and slope per mile are greater, even in the frequency range from 1 to 12 kc, and the cable mileage must be less than for loaded spiral-four cable CX–1065/G. Each radio jump is operated at small gain, equal to the 1-kc loss of the preceding cable section.

(4) *Limitations when using AN/TCC–7 equipment.* When using AN/TCC–7 telephone equipment, the loss and slope of the cable are greater, and the total mileage of spiral-cable is sharply reduced. In any radio section, the total length of spiral-four cable from attended points to the most distant radio transmitter should not exceed 1 mile for each direction of transmission.

60. System Operation Characteristics

The technical characteristics of Radio Set AN/TRC–24 are given in paragraph 5. Certain additional system operational characteristics of the radio set are given in *a* and *b* below. These additional system operational characteristics are included in this manual to aid technically qualified personnel to determine uses of Radio Set AN/TRC–24 with equipments other than AN/TCC–3 or AN/TCC–7.

a. Transmitter.

Frequency stability ±.02% or ±25 kc (whichever is larger).

Low-power operation 5–20 watts.

Input impedance and balance characteristics:

Impedance (ohms)	Frequency range	Reflection coefficient	Balance to ground (db)
135	500 cps to 68 kc.	Less than 20%.	30
135	250–500 cps	Less than 40%.	30
600	500 cps to 20 kc.	Less than 20%.	30
600	250–500 cps	Less than 40%.	30

Oscillator frequency deviation:

Band	1-kc input (dbm)	Peak frequency deviation (kc)
B	14 to 18	39
C	14 to 18	31

Frequency response (pre-emphasis characteristic). The ratio of carrier deviation for the signal frequencies below to the carrier deviation for signal frequency of 1 kc at constant modulation level:

Modulating frequency (kc)	Ratio (db)	Modulating frequency (kc)	Ratio (db)
.25	0	20.0	1.1
.50	0	30.0	2.0
2.0	0	40.0	3.1
4.0	.1	50.0	4.1
6.0	.2	60.0	4.95
10.0	.4	68.0	5.6
14.0	.7	90.0 or higher	−35.0

Order-wire noise—The signal-to-noise ratio at 600-ohm receiver output, F1A weighting, is at least 45 db.

Harmonic distortion—Second harmonic output, 57 db below fundamental.

Spurious radiations—At least 60 db below carrier level with band-pass filter installed.

b. Receiver.

Noise level—12 db or less (B-band).
15 db or less (C-band).

Input and spurious response. Signal-to-image ratio is at least 50 db.
Signal to any undesired signal (other than image) ratio is at least 60 db.

Selectivity—Overall, at least 28-db attenuation to signals 1.0-mc off frequency.

Afc pull-in range—At least ±400 kc with an rf input of 50 microvolts.

Squelch—Operate with an rf signal of 6 to 1,000 microvolts within the range of the SQUELCH control.

Output impedance and balance characteristics:

Impedance (ohms)	Frequency range	Reflection coefficient	Balance to ground (db)
135	500 cps-80 kc.	Less than 20%.	30
135	250–500 cps	Less than 40%.	30
600	500 cps-20 kc.	Less than 20%.	30
600	250–500 cps	Less than 40%.	30

Transmitted signal levels—With an rf input range of 6 to 1,000 microvolts, the output as shown below remains constant within ±.5 db:

Impedance (ohms)	Transmitted signal	Band	Normal output (dbm)
135	3.54 radians deviation caused by 24-kc modulating signal at +16 dbm.	B	+16
135	5.9 radians deviation caused by 24-kc modulating signal at +16 dbm.	C	+16
600	3.54 radians deviation caused by 24-kc modulating signal at +16 dbm.	B	+6
600	5.9 radians deviation caused by 24-kc modulating signal at +16 dbm.	C	+6

Noise levels:

Rf input (uv)	Noise output through a 4–68-kc filter
10,000	Less than −53 dbm.
70	Less than −36 dbm.
7	Less than −16 dbm.

Base-band frequency response:

Frequency (1,000 cps reference)	Response
4–68 kc	Reference ±.3 db.
1–4 kc	Reference ±.4 db.
250–1,000 cps	Reference +.4 to −.9 db.

Harmonic distortion—Second harmonic output, 57 db below fundamental:

Order-wire characteristics—Power output characteristics:
When the receiver output power at 1,000 cps at the REC binding posts is +10 dbm, the output power of the handset is −15 dbm ±3 db.
Frequency response characteristic:
For the power output characteristic given above, using a 1,000-cps reference, the frequency response characteristic is as follows:
250 to 1,000 cps: +2, −7 db.
1,000 to 2,000 cps: +0, −7 db.
4,000 cps: −35 db or less.

Signaling circuit—The RING lamp is lighted and the buzzer sounds for a receiver output of at least −10 dbm at 1,600 cps.

61. Summary of Factors to be Considered in Planning Radio Systems

The factors to be considered in planning radio-relay systems are outlined below.

a. Capabilities of Radio Set AN/TRC–24 (par. 31).

b. Propagation characteristics of the terrain (par. 32–38).

c. General siting of radio sets and antennas (par. 40).

d. The type of terrain over which the radio system will operate (par. 41).

e. Power-balance calculations (par. 43–49).

f. Methods of eliminating interference by using the *abm*, double *abm*, and *xy* plans (par. 56).

g. Advantage gained by using cross-polarization, separate masts, and antenna directivity (par. 57).

h. Field methods of minimizing interference when encountered (par. 58).

i. Limitations of spiral-four cable in a radio system (par. 59).

Section II. SERVICE UPON RECEIPT OF RADIO SETS

62. Location of Equipment at Site

a. Locating Antenna Equipment. The site for the antenna equipment is determined from the procedure given in paragraph 39. To choose the proper location at the predetermined site for the antenna equipment, pay careful attention to the following details:

(1) Place the antennas high enough to clear trees, buildings, or any other obstructions in the direction in which transmission or reception is desired.

(2) Do not operate vehicles near antenna sites, particularly near receiving antennas.

(3) Erect the antenna on flat ground, free of rock if possible, so that stakes may be driven. Each antenna will require an area 80 by 100 feet.

(4) If line of sight exists between the selected sites and there are no obstructing trees or buildings, it is not necessary to erect the mast at maximum height to obtain satisfactory communication.

(5) Set up the antennas so that no transmitting antenna at a site transmits directly toward a receiving antenna at the same site.

b. Locating Receivers, Transmitters, Power Supplies, and Autotransformers. The best location for the radio equipment is as close to the receiving and transmitting antennas as possible. Whenever possible, limit the antenna rf transmission lines, Radio Frequency Cable Assembly CG–1030/U, to a single 80-foot length. A 100-foot length of RG–14A/U cable makes up the transmission line and has an attenuation of 3.35 db at 400 mc. That is, more than one-half of the transmitter power is lost in 100 feet of transmission line at this frequency.

(1) Place the equipment in a shelter or in a sheltered location to assure protection from bad weather.

(2) Provide a dry, secure footing that is free from vibration, and that can support the equipment safely and in a level position.

(3) If several radio sets are to be located in the same inclosure, allow enough space so that there will be a minimum amount of interference.

(4) Plan on sufficient space for satisfactory operation and maintenance.

(5) Provide adequate lighting for both day and night operation. Place the equipment so that panel designations may be read easily by operating personnel. Artificial lighting should be installed so that the light falls directly on the panels.

c. Locating Power Units. Place the power units as far from the radio set as the power cord will permit and away from and to the side of the receiving antennas. Power units may be operated in the open, but, in wet areas, they should be placed on high ground, or on a suitable platform. In dry areas, the power units may be located in holes dug into the ground. This muffles the noise.

Warning: If the power units are operated within a building, be sure that all exhaust

connections are tight and that the exhaust pipe extends outside the building and situated from inflammable materials. Carbon monoxide, which is contained in exhaust gases, is tasteless and odorless, but very poisonous.

d. Locating Switch Box and Interconnecting box.

(1) Locate the switch box as close as possible to the power source. Be sure the location is sheltered, secure, and dry.

(2) Locate the interconnecting box as close as possible to the radio equipment.

63. Unpacking, Uncrating, and Checking New Equipment
(figs. 66 and 67)

Radio Set AN/TRC–24, Radio Terminal Set AN/TRC–35, and Radio Relay Set AN/TRC–36 are packaged or oversea shipment. When new equipment is received, select a location where the equipment may be unpacked without exposure to bad weather and which is convenient to the permanent or semipermanent installation of the equipment. Each of the components of Radio Set AN/TRC–24, Radio Terminal Set AN/TRC–35, and Radio Relay Set AN/TRC–36 is packed as described in paragraph 6. Use the procedure described below for unpacking the set. The table in paragraph 6*d* gives the length, width, depth, and weight of the packing cases for Radio Set AN/TRC–24, Radio Terminal Set AN/TRC–35, and Radio Relay Set AN/TRC–36. The contents for each crate are listed in paragraph 7*c*. Refer to figures 66 and 67 when unpacking the equipment.

Note. For used or reconditioned equipment, refer to paragraph 79.

a. Unpacking.

(1) Place the packing container as near the installation site as possible.

(2) Cut the metal bands that encircle the wooden crate. Use a pair of tin snips or a large pair of diagonal cutting pliers.

(3) Remove the nails from the top of the box with a nail puller, if available; if not, pry open the top cover with a prying instrument. Do not insert the instrument too far into the box because this may damage the equipment. Pivot the wooden top through the uncut portion of the metal straps which act as a hinge.

(4) For unpacking a large crate, remove one of the sides so the equipment may be pulled from the crate.

(5) Slit the outer carton with a knife along three edges of the top; the fourth edge may be used as a hinge for the carton.

(6) Open the moisture-vaporproof barrier by slitting it with a knife along one edge of the seal.

(7) Open the inner carton by slitting it as described in (5) above.

(8) Remove the top and side fillers and the desiccant.

(9) Gently lift the equipment from the inner carton.

(10) Unpack Antenna Reflector Support AB–325/TRC by following the procedure given in (2) and (3) above (fig. 67).

(11) Check the equipment for completeness against the packing list in the envelope that is fastened to the outside of the crate.

b. Checking. Always check equipment quantities against the inclosed packing slip. Note any discrepancies at this time for record.

c. Repackaging. Refer to paragraph 383 for field repackaging instructions. Tape can be requisitioned through the proper channels to seal the moisture-vaporproof barrier and waterproof bag. Use new (or dried) desiccant, which is a drying agent, within the moisture-vaporproof barrier for protection against moisture.

64. General Installation Instructions

Installation of Radio Set AN/TRC–24 consists of two major operations: positioning the equipment and components and grounding the equipment. The procedure for installing a ground is given in paragraph 65.

a. Positioning Radio Equipment.

(1) Remove the covers from the transit cases of Radio Transmitter T–302/TRC, Power Supply PP–685/TRC, Radio Receiver R–417/TRC, and Tuner Case CY-1338/TRC. Remove the transit-case covers by releasing the spring catches located on the four sides of each case.

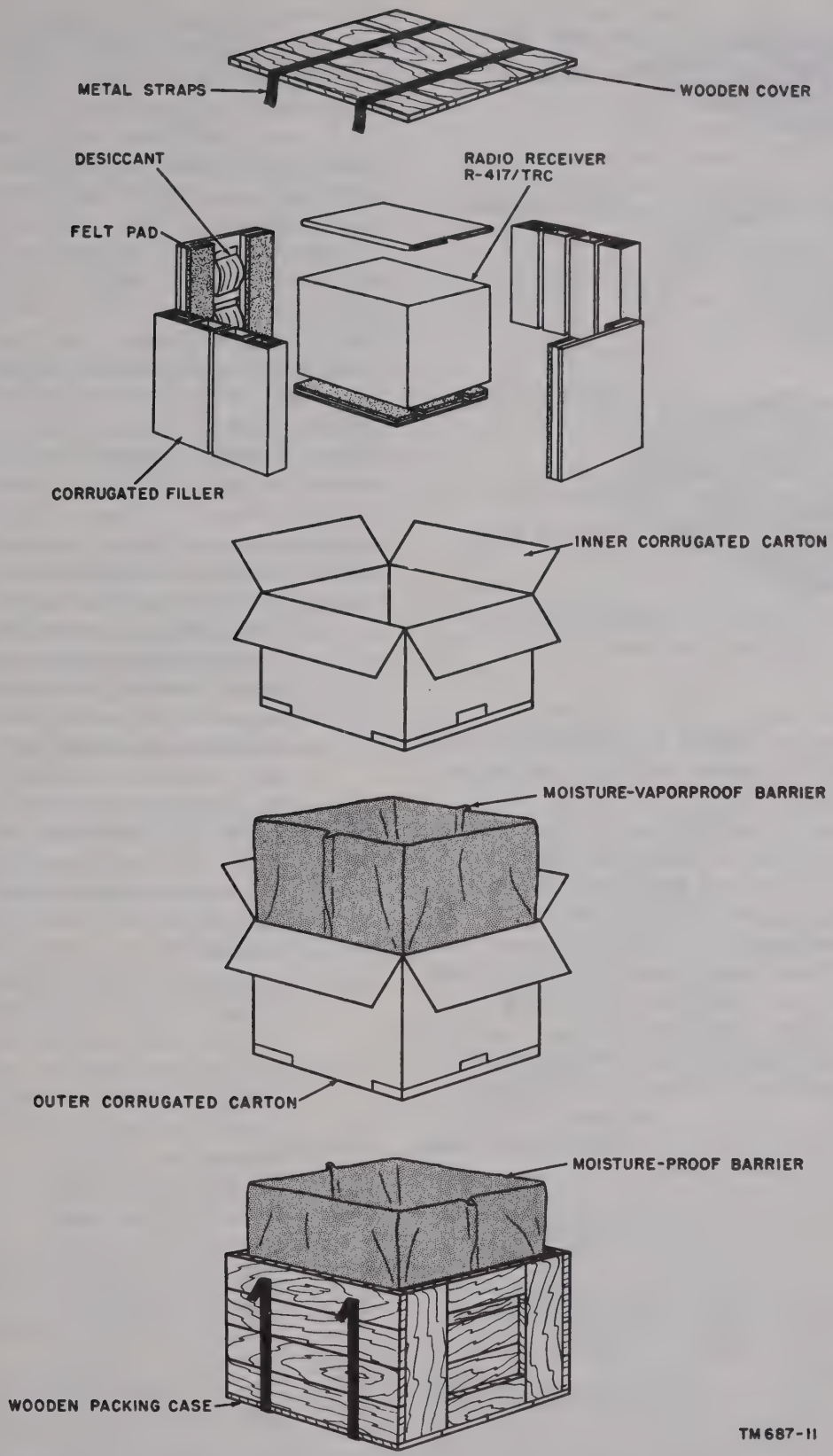

Figure 66. Typical packaging drawing for equipment that contains vacuum tubes.

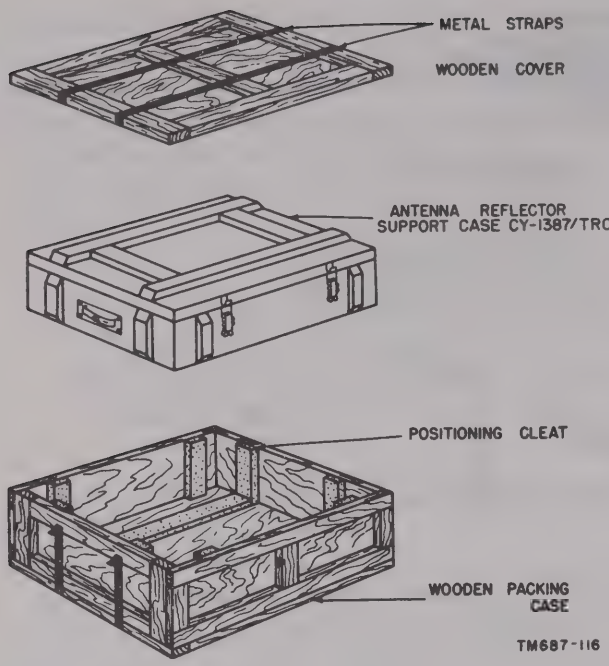

Figure 67. Typical packaging drawing for unbreakable equipment.

Caution: Use a screwdriver or pliers to release the catches. Do not use the fingers; painful injuries may result.

(2) Stack the equipment on the footing, if the transit cases that contain the equipment are designed for stacking or mounting one above the other. The arrangement of the equipment components used in an installation is flexible and limited only by the lengths of the interconnecting cables.

(3) When stacking equipment components one above the other, lash the web carrying strap of each stacked transit case to the web carrying strap of the transit case below it.

(4) Pull out the transmitter vibration mount lock as far as possible. This lock is located on the middle left side of the transmitter front panel (fig. 6). When this lock is released the transmitter exciter chassis is shock-mounted.

Caution: If the equipment is moved without the transmitter front cover in place, the vibration-mount lock must be in the locked or pushed-in position. Always place the vibration-mount lock in the locked position during shipment or when transporting the transmitter.

b. Positioning Autotransformer Fixed Power Transformer TF–167/TRC. Place the TF–167/TRC next to Power Supply PP–685/TRC. Loosen the captive screws at the ends of the autotransformer. Now remove the front and rear covers to reach the INCR OUT switch and connectors (figs. 19 and 20). Keep the cover on the convenience outlet in place when this outlet is not in use.

c. Positioning Power Unit. Refer to the applicable technical bulletin for the installation of two power Gasoline Engine Generator Sets PU–286/G with accessory units in a 1½-ton trailer. Detailed instructions for the power unit are contained in TM 11–940A.

d. Installing R-F Tuners. After positioning the components of Radio Set AN/TRC–24, install the correct transmitting and receiving rf tuners for the frequency assigned.

(1) Radio Frequency Amplifier-Multiplier AM–915/TRC (225 to 400 mc, C-band) is shipped installed in the transmitter chassis. Radio Frequency Amplifier AM–912/TRC (100 to 225 mc, B-band) is shipped installed in the tuner case. Install the correct rf tuner (AM–915/TRC or AM–912/TRC) in the transmitter for the rf channel assigned for use, and install the other tuner in the tuner case ((3) below).

Caution: When installing an rf tuner, be sure it is properly located on the guide rails in the transmitter.

(2) Amplifier-Converter AM–914/TRC (225 to 400 mc, C-band) is shipped installed in the receiver chassis. Amplifier-Converter AM–913/TRC (100 to 225 mc, B-band) is shipped installed in the tuner case. Install the correct tuner (AM–914/TRC or AM–913/TRC) in the receiver for the rf channel assigned for use and install the other tuner in the tuner case ((3) below).

(3) The rf tuners can be removed by following the procedure below:

(*a*) Use a screwdriver to release the four cam-lock fasteners on the front panel of the tuner.

(*b*) Hold the tuner by the handles on either side of its front panel and pull the tuner straight out from the chassis.

e. Installing Band-pass Filters.

(1) A band-pass filter is always used in the receiver, and usually in the transmitter. The correct band-pass filter for the rf channel assigned must be installed in place of the dummy filter shipped in the receiver and transmitter. The band-pass filter is used in the transmitter except when it is known that spurious radiations do not cause interference with other radio sets. When the band-pass filter is not required, do not remove the dummy filter.

Caution: To prevent misalinement of the transmitter and the receiver, a band-pass filter should be installed in the transmitter only after the procedure outlined in paragraph 107*b* has been completed, and installed in the receiver only after the procedure outlined in paragraph 114 has been completed.

(2) The band-pass filters are part of major groups in Filter Kit MK–124/TRC and Filter Kit MK–123/TRC and shipped and housed in Accessories Cases CY–1344/TRC (fig. 10). Refer to the chart below to determine the filter to be used for the rf channel assigned.

Band-pass filters and frequency range chart

Band-pass filter	Frequency range (mc)	Band	Channel number in frequency range
F–192/U	100–121	B	1– 42
F–193/U	121–142	B	43– 84
F–194/U	142–163	B	85–126
F–195/U	163–184	B	127–168
F–196/U	184–205	B	169–210
F–197/U	205–226	B	211–250
F–199/U	223–253	C	26– 53
F–200/U	253–283	C	54– 83
F–201/U	283–313	C	84–113
F–202/U	313–343	C	114–143
F–203/U	343–373	C	144–173
F–204/U	373–403	C	174–200

(3) Follow the procedure outlined in (4) below to install the correct filter (or filters) for the rf channel (or channels) assigned in place of the dummy filter in the receiver and transmitter. Leave the dummy filters installed in the receiver and transmitter until the band-pass filters are installed. The dummy filter or band-pass filters are stored in their cases when not in use.

(4) The filters are removed from the transmitter and receiver chassis by following the procedure in (*a*) and (*b*) below:

(*a*) Use a screwdriver to release the two cam-lock fasteners on the front panel of the filter.

(*b*) Hold the filter by a knob on its front panel, then pull the filter straight out from the chassis.

f. Installing Interconnecting and Switch Boxes. No special instructions are necessary for installing the interconnecting and switch boxes.

65. Installation of Ground

Radio Set AN/TRC–24, Radio Terminal Set AN/TRC–35, and Radio Relay Set AN/TRC–3 must be grounded to protect personnel and equipment from lightning and other sources of high voltage. A common ground may be used for the protection of the radio set and for any other equipment at the same location. The conductors used for grounding the other equipment should be connected to the common ground. Do *not* connect the ground conductors of the other equipment to the GND binding posts of the radio set.

a. Where a buried water supply piping system is available, it should be used as the common ground.

b. When a buried water supply piping system is not available, buried gas pipes, under ground tanks, or other grounded metallic structures can be used as the ground.

c. Where a ground metallic structure is not available, ground Rod MX–148/G must be installed. The installation of the ground rod is described in (1) through (6) below.

(1) Select the lowest, dampest site in the vicinity, preferably in clay or loamy soil.

(2) Scoop out a small hole about 6 inches deep in the selected location.
(3) Remove any paint or grease from the ground rod.
(4) Drive the ground rod into the hole until the top of the rod is approximately 3 inches above the bottom of the hole.
(5) Connect Clamp TM–106 to the protruding part of the ground rod.
(6) Saturate the ground around the rod with water. Keep the ground around the rod moist.

66. Installation of Antenna

a. Position of Antenna with Respect to Radio Equipment. Place the receiving and transmitting antennas as close as possible to the receiver and transmitter. Wherever possible, limit the rf transmission lines to a single 80-foot length. More than one-half of the transmitter power is lost in 100 feet of transmission line at 400 mc.

b. Antenna Area Requirements. Erect the antenna on flat ground, free of rock if possible, so that stakes may be driven. If a rocky site is chosen, refer to B, figure 68 for the use of a rock anchor. Each antenna system requires an area of 80 by 100 feet; therefore, bear in mind the following:

(1) A terminal radio station needs one antenna system for receiving and transmitting.
(2) A radio-relay station needs two antenna systems for transmitting and receiving.

c. Soil Problems. It is difficult to anchor an antenna mast in loose sand and soft clay soil. Stakes driven into sand and soft clay are easilv loosened and pulled out by winds of moderate velocities. Keep the antenna mast guy wires taut at all times. If stakes driven into poor soil do not hold, some means of anchoring the stake will have to be used. A suitable weight such as a large rock or tree should be placed on top of the stake to anchor it. If in the field and no other expedient is available, use heavy tools or equipment to anchor the stakes. Often it is practicable to use a large screw anchor (C, fig. 68) or preferably a dead-man anchor (A, fig. 68) instead of the stake to secure the guy wires of the antenna mast. If the antenna mast needs further support, refer to TM 11–5073 on the use of Scaffold Tower AZ–216/U.

67. Assembly of Antenna Support Groups, Mast AB–235/G

a. General. All the parts needed to install a complete antenna support mast are contained in three mast-section carriers, the stake carrier, and Accessories Case CY–1392/G (fig. 14).

b. Procedure.

(1) Place the three mast-section carriers, the stake carrier, and the mast accessories case at the location chosen for antenna erection (par. 62*a*).
(2) Remove the mast base from the mast accessories case and place it at the point where it is desired to have the antenna.
(3) Position the mast base so that the side with the 0° marking on the base faces the direction in which the mast will lie during assembly. During assembly, the antenna may lie in any direction that is convenient.

Caution: Be sure that the line on the swivel of the mast base coincides with the 90° marking on the mast base. This procedure prevents damage to the lower (when upright) casting when the gin pole is raised to a vertical position. Figure 79 shows that in the center of the swivel, the axis of the lower casting is parallel with the MAST tube. This is correct. To be doubly sure, grasp the GIN POLE tube and pivot it to the upright position (fig. 81). If it moves freely, the swivel, mast base, MAST tube, and GIN POLE tube are properly oriented prior to assembly.

(4) Remove four Stakes GP–2 from the guy stake carrying case and drive these stakes through the four holes at the corners of the mast base (fig. 69). This will permanently anchor the mast base to the ground.
(5) Loosen the two mast base locks by turning them 2 turns counterclockwise, and rotate the upper portion of the mast base so that the MAST tube lies over the 0° marking on the mast

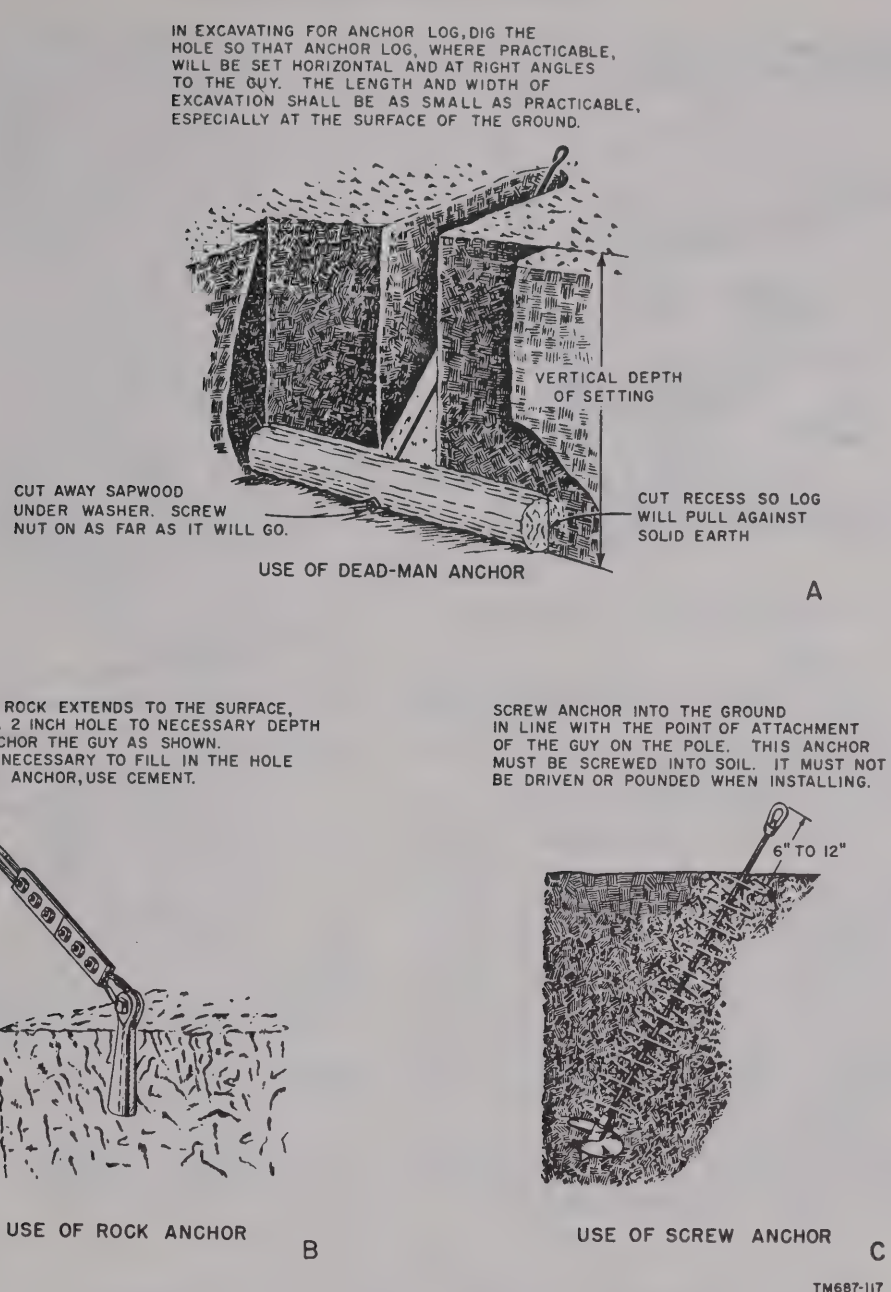

Figure 68. Use of dead-man, rock, and screw anchors.

base (fig. 70). Lock the two mast base locks.

(6) Remove a Mast Section AB–332/G from one of the mast-section carrying cases and place the mast-section end, which does not have slots, firmly over the mast base GIN POLE tube, until the slots on the mast base GIN POLE tube engage the rod on the inside of the mast section (fig. 70).

Caution: When unpacking, keep sand and mud from the ends of the mast sections.

(7) Add four more mast sections to the mast section on the mast base GIN POLE tube. This makes the gin pole approximately 25 feet long.

Note. When coupling mast sections, fit the end of one mast section without slots over the slotted end of the other mast section until the slots engage the internal rod of the unslotted end.

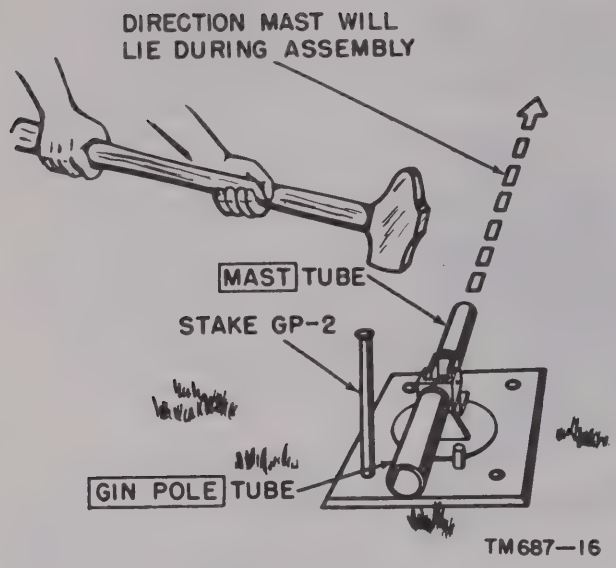

Figure 69. Driving Stake GP–2 in mast base.

(8) Place the gin pole so tnat it lies on the ground and points in the opposite direction from that in which the mast lies during assembly.

(9) Drive one Guy Stake GP–113/G into the ground at a point 5 feet beyond the end of, and in line with, the gin pole and at an angle of 80°, as shown in figure 71. This is the *raising stake.* Drive the guy stake into the ground until the length of the stake above ground is a little greater than the height of the hinged guy attachment. Position a hinged guy attachment on the raising stake.

(10) Use the length of one mast section (5½ feet) as a guide and locate a point 40 feet from the mast base and directly behind the gin pole (fig. 72). Drive one Guy Stake GP–113/G into the ground at this point until the length of the stake above ground is a little higher than the height of the hinged guy attachment. This is the front guy stake. Put a hinged guy attachment on the front guy stake.

(11) Use the front guy stake as a reference point and drive three more guy stakes into the ground at 90° intervals on a 40-foot diameter circle (fig. 72). Position the hinged guy attachments on the three guy stakes. If two antenna masts are being erected at one site, refer to figure 73 for the ground assembly plan.

(12) Couple three mast sections to the MAST tube of the mast base. Place a guy plate over the collar at the top of the third mast section.

(13) Use the shackles at the MAST ends of the guy and fasten the four 50-foot Guys MX–1483/G to the guy plate on the top of the third mast section (fig. 74).

Note. The mast end of the guy is the end with the arrow pointing to MAST.

(14) Use the shackle attached to the snub-it fastener on the 50-foot guy and fasten one guy to the hinged guy attachment on one of the side stakes. Fasten the diagonally opposite guy to the hinged guy attachment on the other side stake.

Figure 70. Inserting mast section over GIN POLE tube.

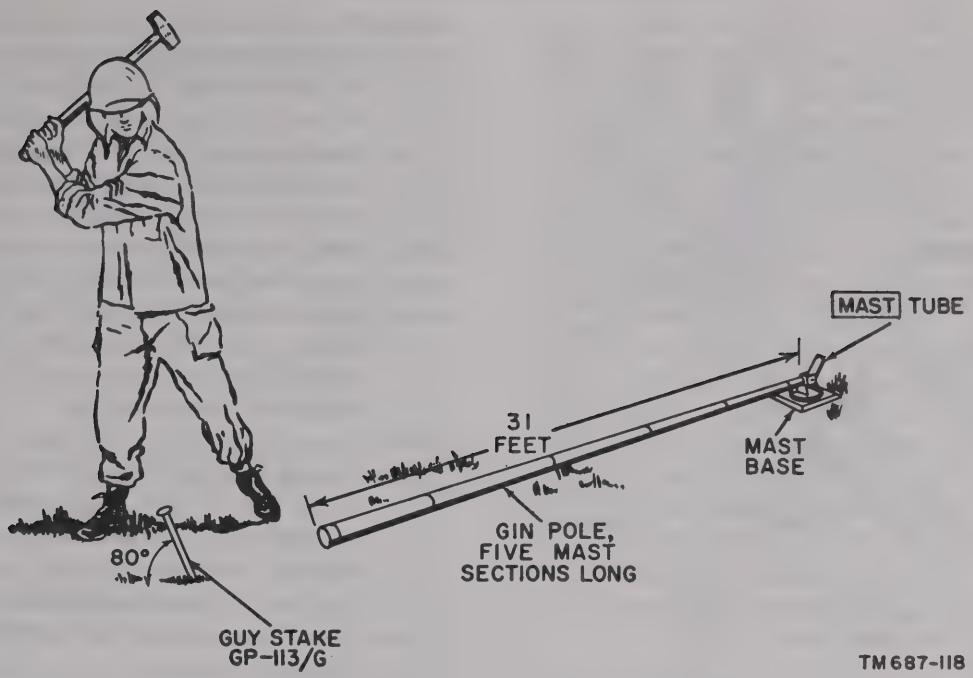

Figure 71. Driving Guy Stake GP–113/G.

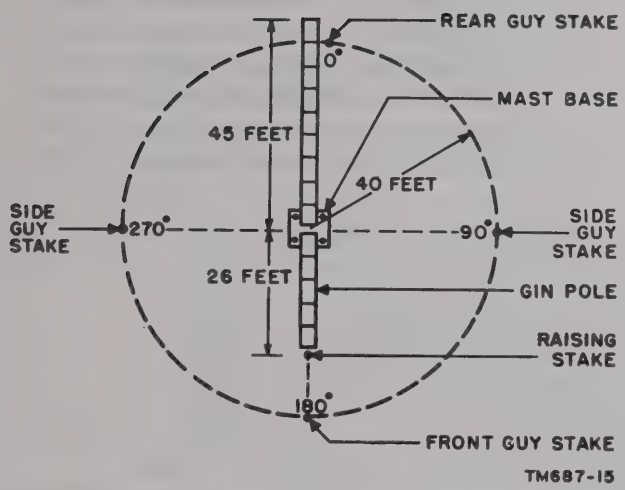

Figure 72. Ground assembly plan for one antenna mast.

Note. When fastening the shackle to the hinged guy attachment, be sure the shackle is secured to *both* sides of the hinged guy attachment.

(15) Loosen the thumbscrews on the snubit fasteners (fig. 75) and then pull the free ends of the two side guys to adjust the length of these guys until there is only a little slack. The free ends of the guys can be pulled freely through the snubit fasteners after the snubit fastener thumbscrews are loose. To pull the mast end of a guy through the snubit fastener, first press and hold the snubit fastener handle close to the snubit fastener,

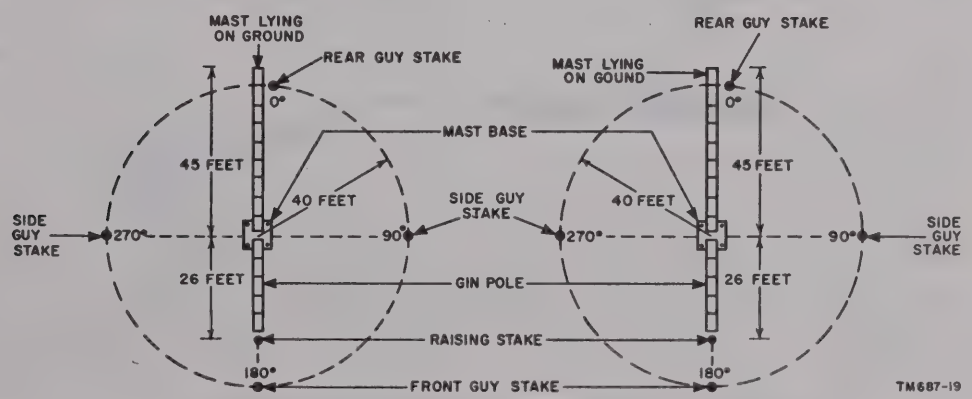

Figure 73. Ground assembly plan for two adjacent antenna masts.

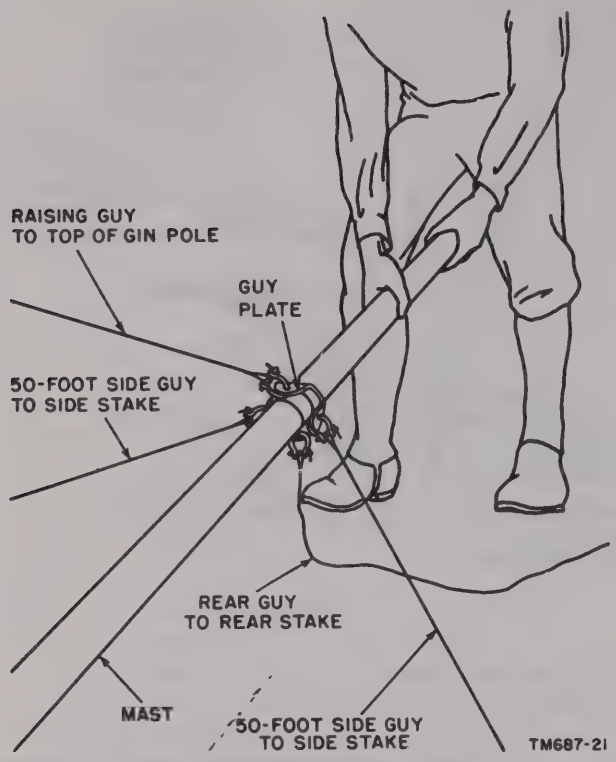

Figure 74. Guy plate connections.

then pull the mast end of the guy (fig. 75).

(16) To measure the proper length of the rear 50-foot guy, extend it to one of the side stakes and adjust its length to that of the side guy. Fasten the shackle attached to the rear guy snubit fastener to the hinged guy attachment on the rear stake.

(17) Add three more mast sections and a guy plate to the mast. Use the shackles at the mast ends of the guys and fasten the four 58-foot Guys MX–1483/G to the guy plate at the top of the sixth mast section.

(18) Repeat steps in (14), (15), and (16) above for the rear and side 58-foot guys. Be careful to arrange the guys so that they do not cross. Connect shorter guy shackles to lower holes on hinged guy attachments.

(19) Add three more mast sections to the mast.

(20) Remove Antenna Reflector Support AB–325/TRC from its case and mount it to the top of the ninth mast section. The antenna reflector support can be mounted in either of two positions, depending on whether a single-reflector or two-reflector mounting is de-

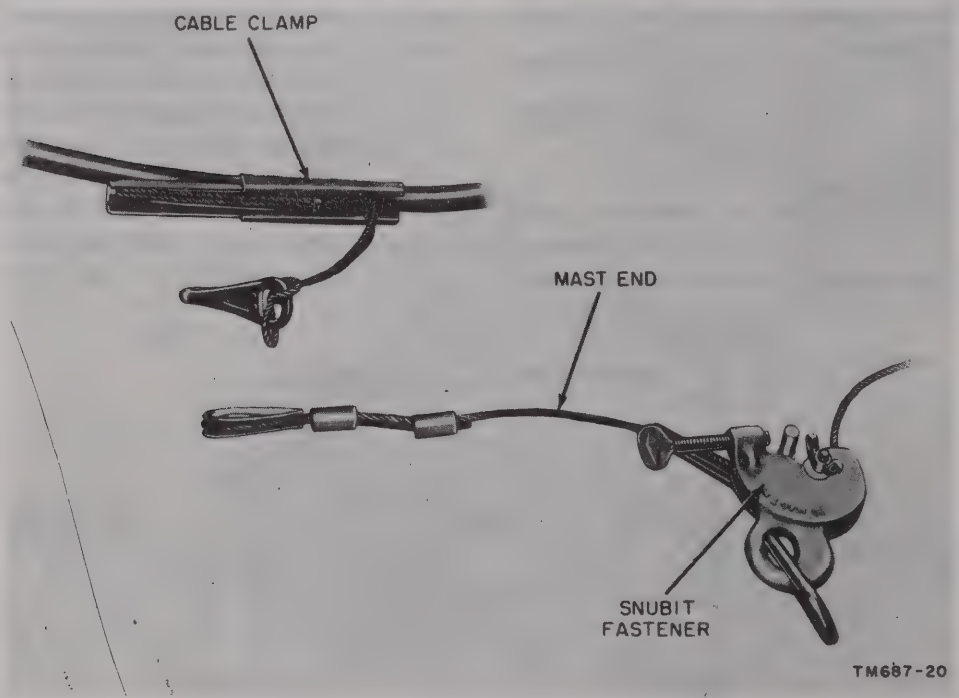

Figure 75. Use of snubit fasteners and cable clamps.

sired. Figure 7 shows the mounting position for supporting two reflectors and figure 76 shows the mounting position for supporting a single reflector. A guy plate is mounted around one collar of the reflector support with bolts and a ring. This guy plate is free to rotate on the reflector support collar. Secure the guy plate to the appropriate collar of the reflector support. Use the shackles at the mast ends of the guys and fasten four 70-foot Guys MX–1484/G to the antenna reflector support guy plate. These shackles are shown in figure 78.

(21) Use the free shackle on the ring attached to the snubit fastener on the 70-foot guy and fasten one guy to the top hole of the hinged guy attachment on one of the side stakes. Fasten the diagonally opposite 70-foot guy to the top hole of the hinged guy attachment on the other side stake.

(22) Repeat the step in (15) above for the 70-foot side guys.

(23) Extend the rear 70-foot guy to one of the side stakes and adjust its length to that of the side guy. Use the shackle and attach the snubit fastener to the top hole of the hinged guy attachment on the rear stake.

Note. The mast should not consist of 9 mast sections having a total length of 45 feet, topped by Antenna Reflector Support AB–335/TRC.

(24) Place the gin pole in a vertical position.

(25) Rotate the gin pole in a direction perpendicular to the mast until the gin pole is lying on the ground at an angle of approximately 85° to the mast (fig. 79).

(26) Place the gin-pole cap securely over the top of the gin pole with the three holes facing the rear guy stake.

(27) Use the shackles attached to the snubit fasteners at the free ends of the front 50-, 58-, and 70-foot guys and fasten each of these guys to the gin-pole cap (fig. 80). Adjust the lengths of the front 50-, 58-, and 70-foot guys until there is only a little slack. The front 70-foot guy should be made a little tighter than the other two front guys. Be sure that the snubit fasteners are disengaged ((15) above).

(28) Use the shackle and attach the block and tackle assembly to the gin-pole hole facing the front stage (fig. 80).

(29) Fasten the other end of the block and tackle to the raising stake ((9) above).

(30) Fasten the gin-pole rope guys to the two side holes of the gin-pole cap (fig. 80). Adjust to 45 feet the length of the gin-pole rope guy that is connected to the side of the gin-pole cap closer to the ground (use the length of the mast as a guide). Tie the end of this rope guy to the side stake closest to the gin-pole cap.

68. Raising the Gin Pole

a. Check to see that all guys and stakes and the block and tackle are secure. Raise the gin pole to a vertical position by hand and attach the loose gin-pole side rope guy to the other side stake. Adjust the lengths of the gin-pole rope guys until they are taut; be sure the gin pole stays in a vertical position.

Caution: To prevent the mast from toppling, the mast must be slightly bowed as shown in figure 81.

b. Raise the mast with the block and tackle until the top of the mast is about 3 feet off the ground (fig. 81). Check to see that the guys are taut and do not cross. Adjust the lengths of the 50-, 58-, and 70-foot front guys by using the free ends of the guys (par. 67*b* (15)) so that the mast is slightly bowed (fig. 81). If necessary, lower the mast, release one of the gin-pole side guys, and place the gin pole on the ground to adjust the lengths of the guys to keep the mast bowed during raising.

Caution: Be sure the thumbscrews on the snubits at the gin pole are locked before the mast is raised.

c. With the end of the mast about 3 feet off the ground, remove the A frame from the reflector case (fig. 16) and place it under the end of the mast. The A frame supports the mast and helps in the mounting of the reflectors to the reflector support.

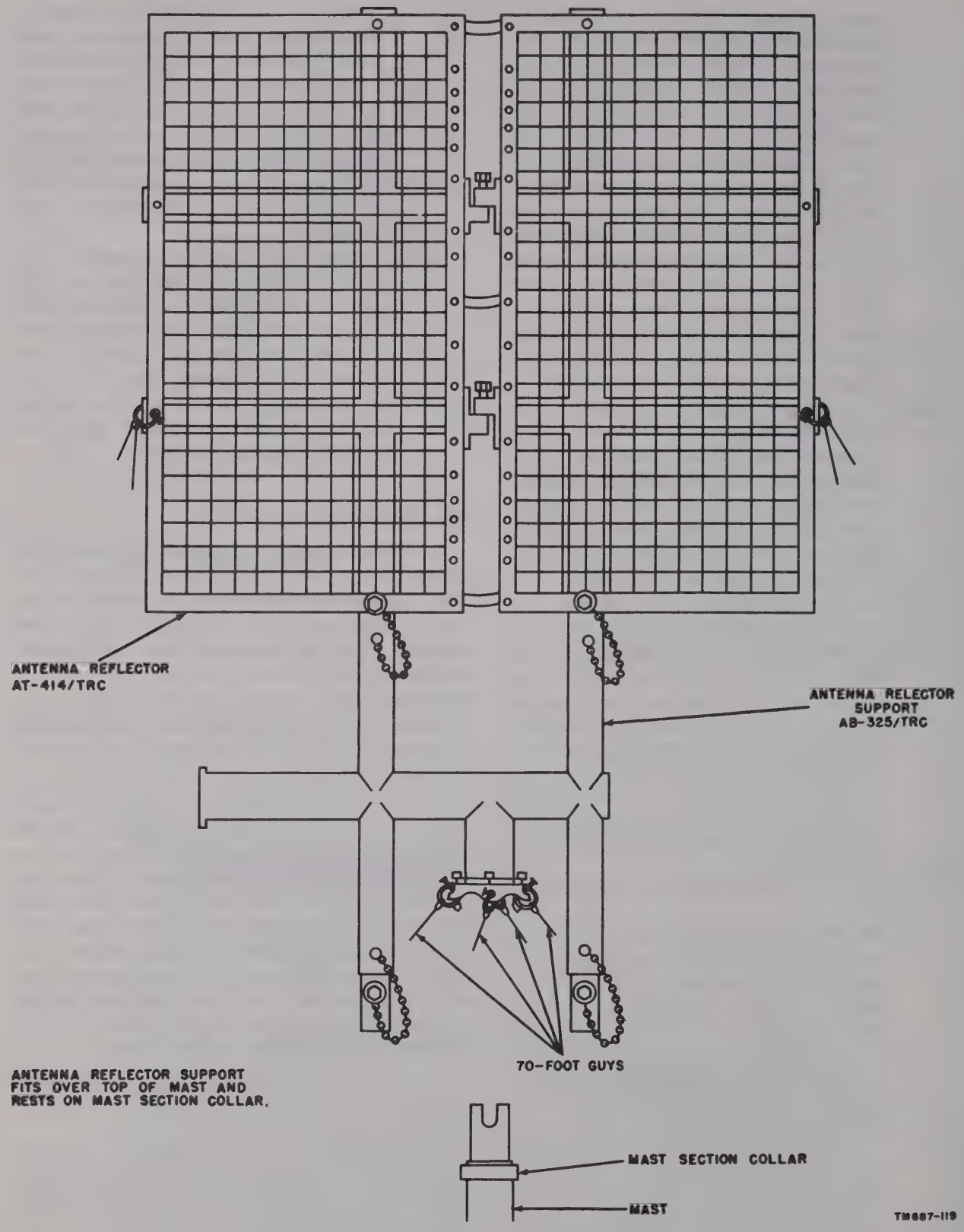

Figure 76. Single-reflector mounting.

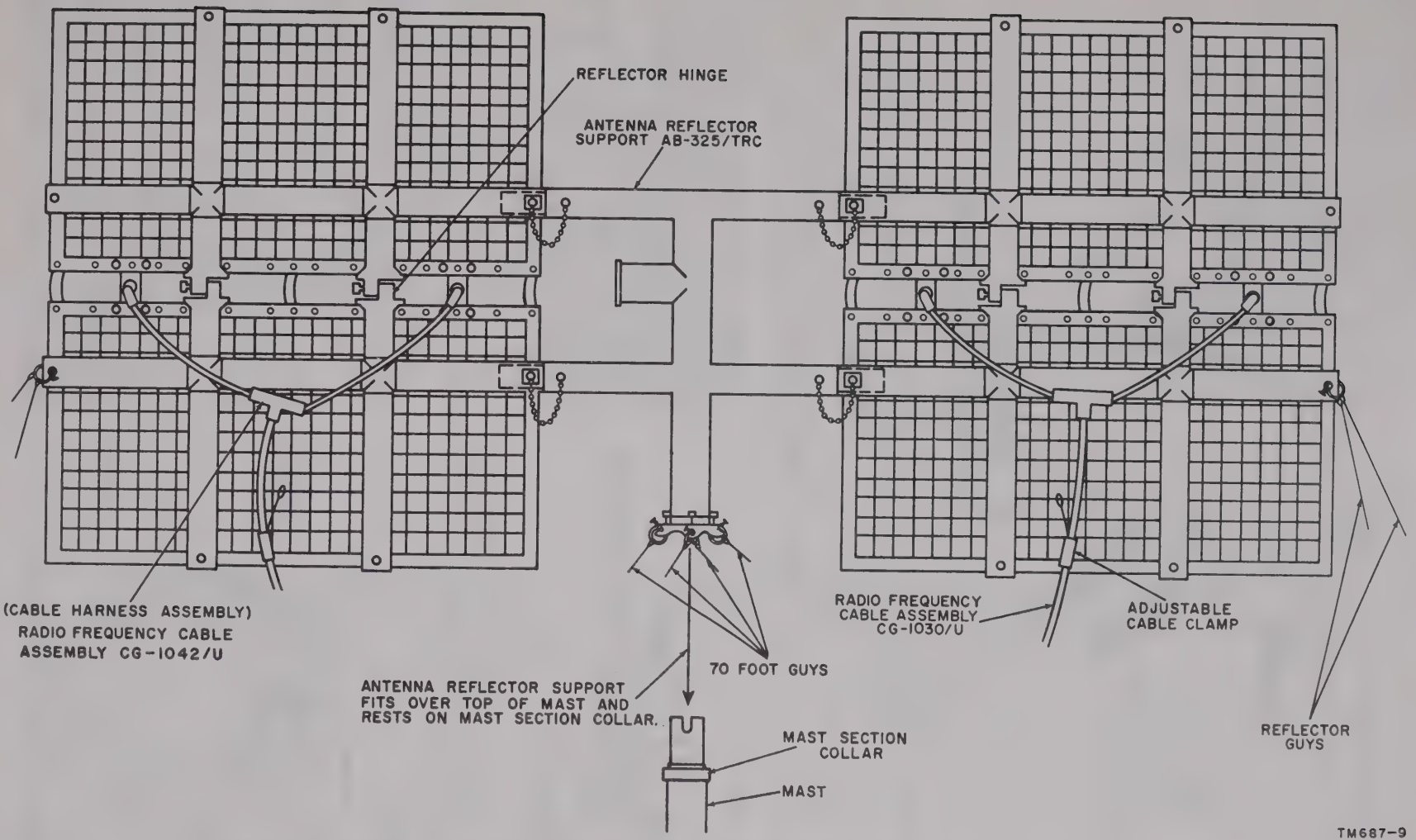

Figure 77. Rear view of reflectors showing cable harness, Radio Frequency Cable Assembly CG-1042/U.

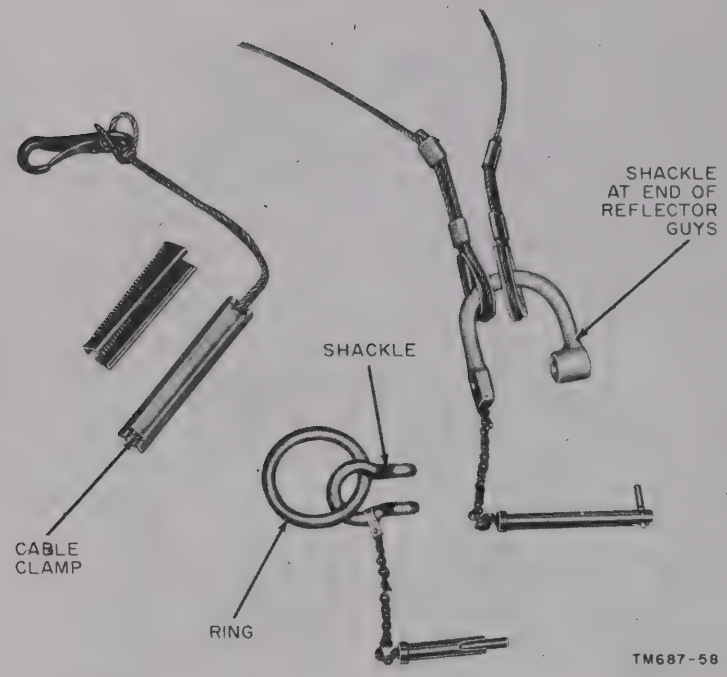

Figure 78. Shackles and cable clamp.

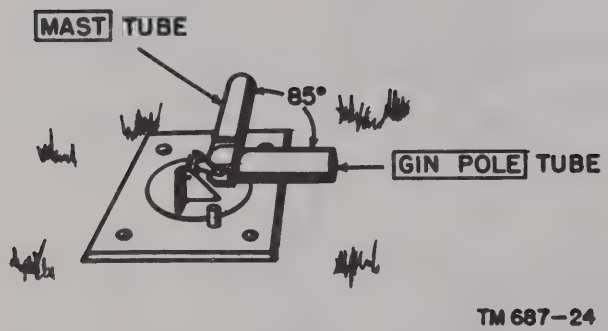

Figure 79. Position of GIN POLE and MAST tubes for gin pole cap attachment.

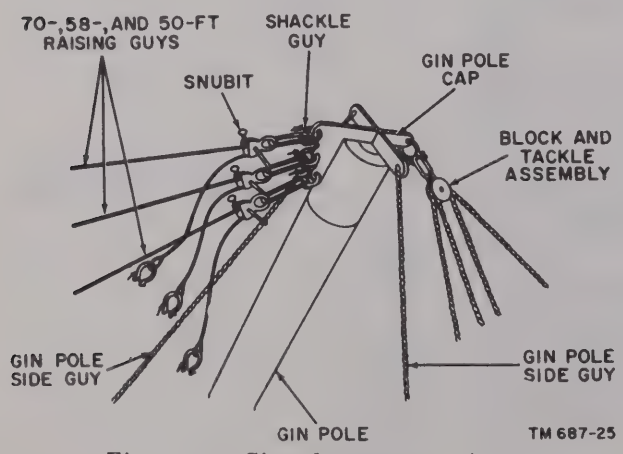

Figure 80. Gin-pole cap connections.

Caution: To reduce the possibility of the loaded antenna mast falling while raising, do not attempt to put up the antenna mast with the antenna system assembly attached if fewer than four men are available.

d. If fewer than four men are available to raise the antenna mast, follow the procedure outlined in (1) through (4) below:

(1) Raise the antenna mast to an upright position without the antenna system assembly attached. Follow the procedure of paragraph 70.

(2) Determine the taut length of the guy wires for the upright position of the antenna mast.

(3) Lower the unloaded antenna mast and attach the antenna system assembly (par. 69).

(4) Slowly raise the loaded antenna mast (par. 70) and adjust the guy wire lengths as close as possible to their predetermined taut lengths; observe the precautions in paragraph 70*e*.

e. If four or more men are available to raise the antenna mast, the unloaded antenna mast need not be raised into an upright position. Attach the antenna system assembly to the

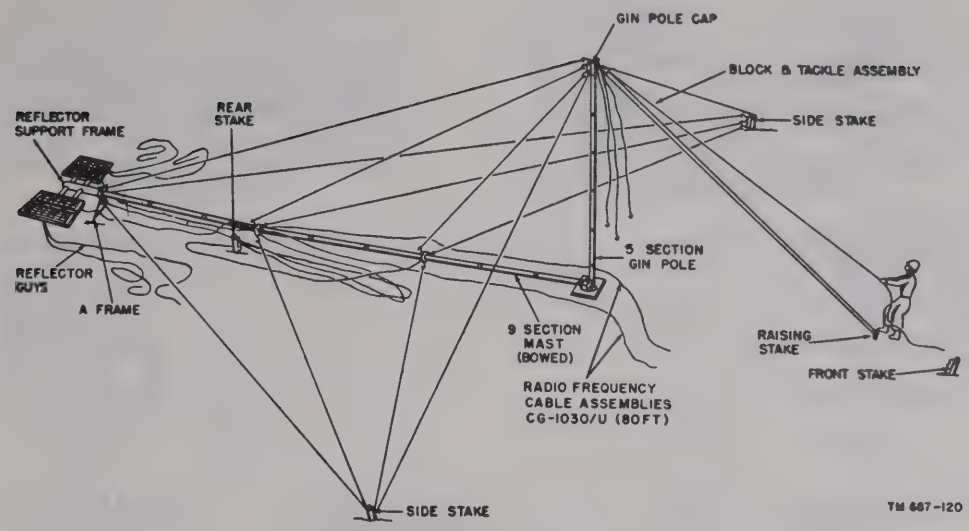

Figure 81. Gin pole erected.

antenna mast (par. 69) and raise the mast, follow the procedure in paragraph 70.

69. Assembling Antenna System

a. General. The following parts are required to install a complete transmitting and receiving antenna system.

(1) The two Antenna Reflectors AT–414/TRC are packed in Antenna Reflector Case CY–1385/TRC (fig. 16) and can be removed upon loosening the two captive hinge bolts on each reflector.

(2) Six Antenna Dipoles AT–412/TRC for the B-band range of frequencies are in Antenna Case CY–1371/TRC (fig. 17). Six Antenna Dipoles AT–413/TRC for the C-band range of frequencies are in Antenna Case CY–1370/TRC (fig. 17).

(3) Two Radio Frequency Cable Assemblies CG–1030/U (each 80 feet long) are wound on Cable Reel RC–404/TR (fig. 15).

(4) Two harnesses (Radio Frequency Cable Assembly CG–1042/U), each 40 inches long, are contained in each of the B-band and C-band antenna cases (fig. 17).

(5) Four reflector Guys MX–1483/G are contained in Antenna Reflector Support Case CY–1387/TRC (fig. 16).

(6) Four cable clamps and four shackles and ring assemblies.

(7) Tools and wrenches needed are in Antenna Reflector Support Case CY–1387/TRC (par. 7*c*).

b. Procedure.

(1) Remove the two reflectors from the reflector case, unfold them, and lock the reflector hinges (fig. 77) in the unfolded position by the captive bolts.

(2) The reflectors can be secured to the reflector support for either horizontal polarization (dipole horizontal) or vertical polarization (dipole vertical) (fig. 82). Companion antennas must have the same polarization; if this is not done, considerable signal attenuation will occur. Do not attempt to transmit to a vertically polarized antenna with a horizontally polarized antenna or vice versa.

(3) Use the information given on figure 83 and remove the correct dipoles for the assigned radio-frequency channel or channels from the antenna cases. (Two identical dipoles must be mounted equidistant from the centerline on each reflector.) The C-band dipoles are shipped completely assembled in Antenna Case CY–1370/TRC The B-band dipoles are shipped disassembled in Antenna Case CY–1371/TRC. When the B-band dipoles are to be used, assemble these dipoles before they are mounted on the reflector. To assemble the B-band dipoles, screw

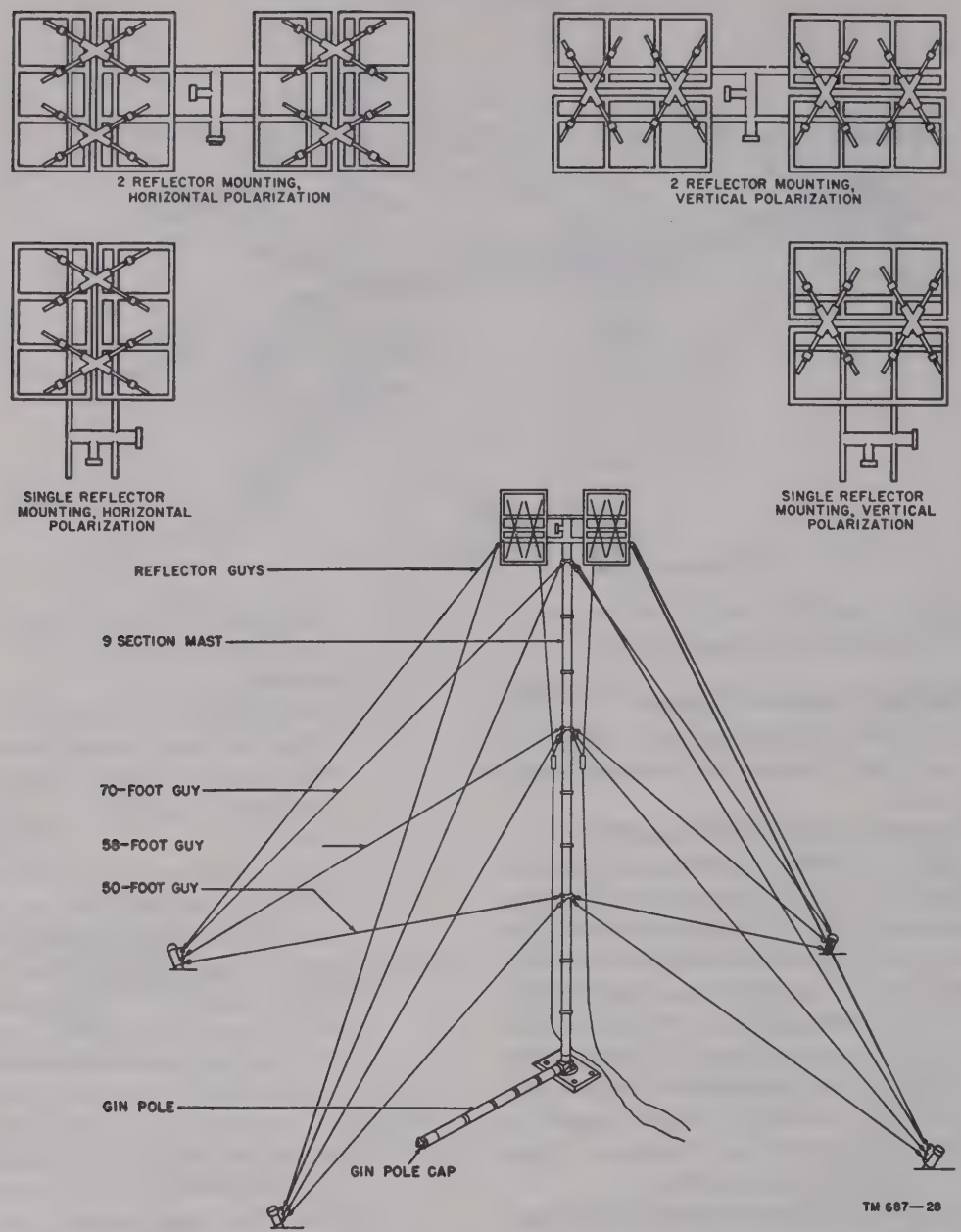

Figure 82. Antenna assembly mounting for vertical and horizontal polarization.

two of the disassembled sections into each of the dipole V heads.

(4) Tapped holes on each reflector are used for mounting the dipole antenna. These holes are marked with the channel ranges as given under the D position in figure 83. Select the proper holes on the reflector for the radio-frequency channel assigned and mount the dipole antenna in these holes with the four captive screws on the dipole mounting.

(5) Loosen the chuck fitting on each dipole and slide the moving dipole section out of the channel marking corresponding to the assigned radio-frequency channel. Tighten the chuck fitting. This is the L adjustment shown on figure 83. Make this adjustment for each dipole used.

(6) Use the information given on figure 83 and determine for the assigned rf channel the correct distance between each dipole and the reflector.

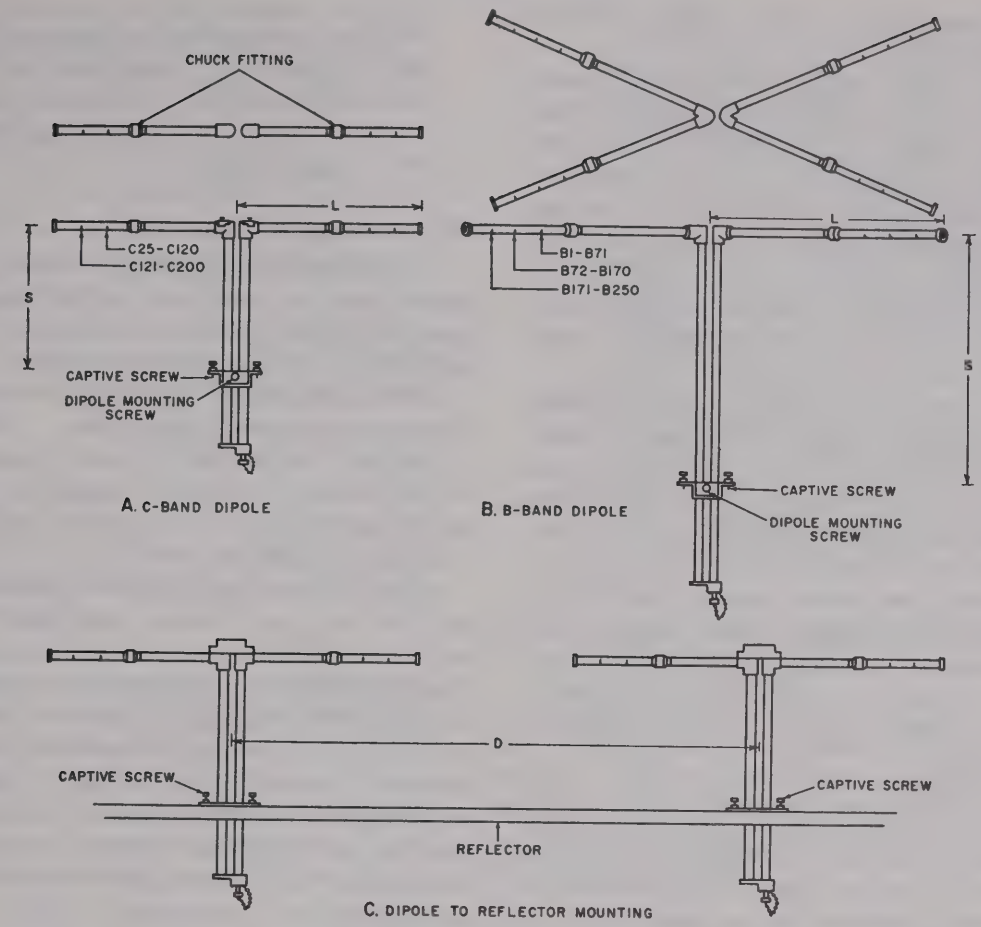

R-F CHANNEL	L ADJUSTMENT	S ADJUSTMENT	D POSITION
B1 THROUGH B71	B1-B71	B1-B71	B1-B250
B72 THROUGH B170	B72-B170	B72-B170	B1-B250
B171 THROUGH B250	B171-B250	B171-B250	B1-B250
C25 THROUGH C120	C25-C120	C25-C120	C25-C120
C121 THROUGH C200	C121-C200	C121-C200	C121-C200

TM 687-30

Figure 83. Dipole mounting adjustments.

Loosen the dipole mounting screw and any adjacent two of the four captive screws of the dipole mounting enough to allow sliding the dipole antenna to the channel marking corresponding to the assigned radio-frequency channel (under S adjustments in fig. 83). Tighten the dipole mounting screw.

(7) Remove the watertight connector cover at the end of each dipole antenna and fasten together the ends of the two cable harnesses (Radio Frequency Cable Assembly CG-1042/U to the dipole antenna connector (fig. 77).

(8) Unroll two 80-foot rf cables (Radio Frequency Cable Assembly CG-1030/U from Cable Reel RC-404/TR. Remove the watertight cover from one end of each of these cables. Fasten the uncovered end of one 80-foot rf cable to the connector at the center of one of the cable harnesses, and the uncovered end of the other 80-foot rf cable to the connector at the

center of the other cable harness (fig. 77).

(9) Secure the cable clamp (figs. 75 and 78), stored in Antenna Reflector Support Case CY–1387/TRC, to each 80-foot rf cable at a point about 12 inches below the end that is coupled to the cable harness. Leave some slack in the cable to ease strain on the dipoles (fig. 77), then secure each cable clamp to the respective reflector with the cable clamp snap.

(10) Extend both 80-foot rf cables along the entire length of the mast. Secure a cable clamp to each 80-foot rf cable at a point about 6 inches below the guy plate that is located 30 feet from the mast base. When the mast is erect, the cable clamps secure the cable to the upper third of the mast as shown in figure 82. Secure the snap of each of the cable clamps to one of the loops at the ends of the 58-foot guys.

Caution: To avoid unnecessary losses in the 80-foot rf cables, be sure that there are no kinks or bends in the cable and that each 80-foot rf cable is secured on opposing sides of the mast.

(11) Use the shackles supplied and attach the ends of the two sets of reflector guys (supplied in Antenna Reflector Support Case CY–1387/TRC) to the reflectors (fig. 77). Unreel the guys but do not fasten the free ends of the reflector guys.

70. Raising the Antenna

a. Inspect the fastenings of all guys and stakes and the block and tackle. Be sure the mast is slightly bowed as shown in figure 81 and that all the guy wires are taut.

b. Pull the block and tackle line to raise the mast as shown in figure 84.

Caution: To prevent the mast from toppling while raising, one man should be stationed at the rear stake to adjust the length of the rear guys continually.

c. As soon as the mast is upright, remove the 50-, 58-, and 70-foot front guys from the gin-pole cap, one at a time. While keeping these guys taut by adjusting the snubit fasteners, secure the shackle of the 50-, and 58-foot guys snubit fasteners, respectively, to one of the two lower holes of the hinged guy attachment on the front guy stake. Secure the free shackle on the ring attached to the snubit fastener of the 70-foot guy to the top hole of the hinged guy attachment on the front guy stake. Be sure that with the antenna mast in an upright position all the guys are taut.

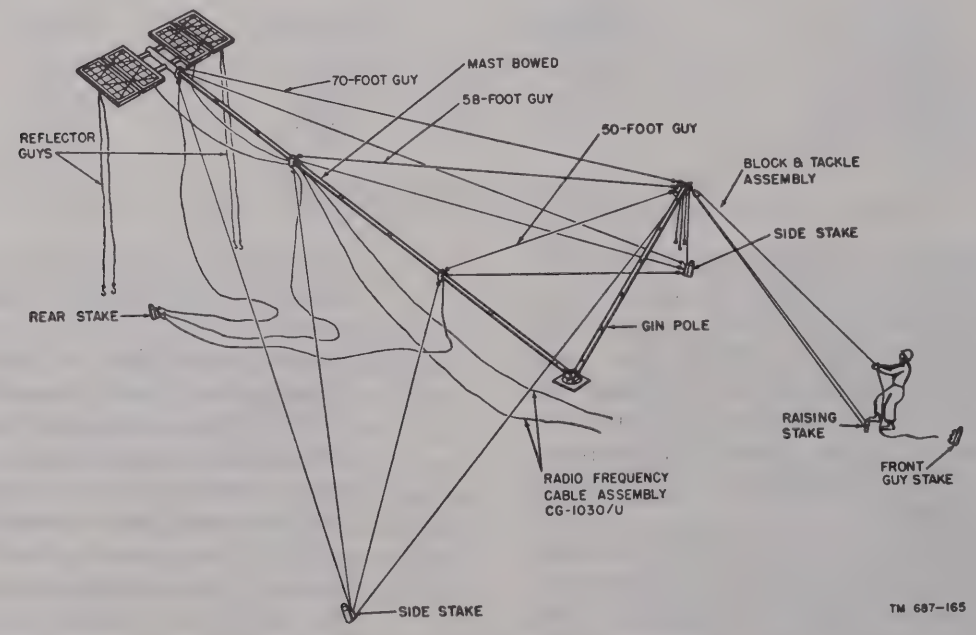

Figure 84. Raising the mast.

Securely lock all snubit fasteners except the ones on the reflector guys. Release the side rope guys and block and tackle from the gin-pole cap. Remove the gin-pole cap.

d. Rotate the antenna assembly with the gin pole until the antennas face the desired direction. Do not secure the reflector guys until the procedure outlined in paragraph 116 has been completed.

e. Use the rolls of friction and rubber tape supplied in Accessories Case CY–1392/G to secure the excess lengths of guy wires to the taut guy wires.

f. Be sure to observe the following precautions:

(1) While raising the antenna, do not let the guys become too tight, because the mast will be bent out of shape and might buckle.

(2) Do not allow the guys to become too loose so that the mast is unsupported.

(3) While raising or lowering the mast, be sure that the three guys attached to the gin pole are all supporting the mast, and that the mast is slightly bowed as shown in figure 81.

(4) If the mast bends excessively during raising, return it to a position where only a slight bow occurs (fig. 81), secure the block and tackle, and then adjust the raising guys.

Warning: Do not stand under the antenna while it is being raised.

(5) Be sure there are no sharp bends or kinks in the 80-foot rf transmission cables. Do not allow vehicles to drive over them. Rf transmission cables are fragile and are not to be treated as electric lighting cables. Dents or sharp bends cause permanent damage, therefore, bury these cables, if possible. If a cable becomes damaged, replace it immediately. The connectors on the ends of the cables must be kept dry.

71. Connections of Components of Radio Set AN/TRC–24

a. Remove the cables listed in the cable chart below from the accessory kits in which they are shipped. Place these cables in a convenient position near the radio set. The number of each cable is marked on a tag that is attached to the cable.

Cable chart

Cable	Crate No.	No. required	Fig. ref.	Length (feet)	Connects	
					From—	To—
CX–2254/U	18	2	28	10	Source of 115 or 230 volts AC.	INPUT jacks on Switch Box SA–331/U.
CX–2251/U	17	1	28	150	OUTPUT jack on Switch Box SA–331/U.	INPUT jack on Interconnecting Box J–532/U.
CX–2257/U	6	1	29	10	OUTPUT jack on Interconnecting Box J–532/U.	115–230V AC INPUT jack on autotransformer.
CX–2258/U	6	1	29	8	115V AC INPUT jack on power supply.	XMTR jack on autotransformer.
CX–2256/U	6	1	29	8	AC POWER jack on receiver.	REC jack on autotransformer.
CX–2253/U	6	1	29	4	POWER SUPPLY jack on transmitter.	TRANSMITTER jack on power supply.
CG–1030/U	13	2	15	80	ANTENNA jack on transmitter or receiver.	Transmitting or receiving antenna cable harness.
CX–2252/U	6	1	29	6	TRANSMITTER jack on receiver.	RECEIVER jack on on transmitter.
CX–1512/U	6	1	29	12	Spiral-four cable	Receiver REC, XMTG, and GND binding posts (par. 74*c*, *d*, and *e*). for terminal and relay connections, refer to paragraphs 75 and 76.

b. Use a wire with a large diameter to connect the GND binding posts of the transmitter, receiver, power supply, autotransformer, interconnecting box, and switch box; then connect these to Clamp TM–106 (par. 65).

Caution: Be sure the power is off before doing the following:

c. Connect the source of 115 (or 230) volts ac to one of the two input jacks on Switch Box SA–331/U; use one Electrical Power Cable Assembly CX–2254/U. If Gasoline Engine Generator Set PU–286/G is the source of power, connect the ground lead of Electrical Power Cable Assembly CX–2254/U to the GND binding post on the power unit and the other two leads (COM and 115/230) to the output binding posts of the power unit. If another source of power is used, connect the GND lead of cable CX–2254/U to a ground (frame) on the power source. With a voltmeter, determine whether one side of the output is grounded. If one side is grounded, connect the COM lead to that side and the 115/230 lead to the other side of the output. If neither side is grounded, connect the COM lead to one side and the 115/230 lead to the other side of the output. If two sources of power are to be used, connect the second source of power to the other input jack on the switch box by using the second cable CX–2254/U.

Note. If two sources of power are to be connected to Switch Box SA–331/U, their voltages must be in the same range; that is, both 115 volts or both 230 volts.

d. Use Multimeter TS–352/U or equivalent and measure the voltage of the power sources. Check to see that the link switch in Interconnecting Box J–532/U is properly set to match the power source voltage (par. 247).

e. Connect the OUTPUT jack on Switch Box SA–331/U to the INPUT jack on Interconnecting Box J–532/U by using Electrical Power Cable Assembly CX–2251/U.

f. Use Electrical Special Purpose Cable Assembly CX–2257/U. Connect one of the OUTPUT jacks of the interconnecting box to the 115–230V AC INPUT jack on Autotransformer Fixed Power Transformer TF–167/TRC.

g. Use Electrical Power Cable Assembly CX–2258/U and connect the XMTR jack of the autotransformer to the 115V AC INPUT jack of Power Supply PP–685/TRC.

h. Connect the REC jack of the autotransformer to the AC POWER jack of Radio Receiver R–417/TRC, using Electrical Special Purpose Cable Assembly CX–2256/U.

i. Use Electrical Special Purpose Cable Assembly CX–2253/U and connect the TRANSMITTER jack of the power supply to the POWER SUPPLY jack on Radio Transmitter T–302/TRC.

j. Connect the RECEIVER jack on the transmitter to the TRANSMITTER jack on the receiver by using Electrical Special Purpose Cable Assembly CX–2252/U.

k. Remove Handset H–90/U from Accessory Kit MK–133/TRC in which it is shipped. Connect the plug on the cable attached to the handset, to the HANDSET jack on the receiver.

l. Connect Radio Frequency Cable Assembly CG–1030/U from the transmitting antenna to the ANTENNA jack on the transmitter.

m. Connect the other cable CG–1030/U from the receiving antenna to the ANTENNA jack on the receiver.

72. Replacing Contents of Later-Type Accessory Case CY–1342/TRC

a. A type of Accessory Case CY–1342/TRC developed later than the type shown in figure 29 is also in use. The later-type case differs from the earlier one only in that the connectors of the cables stored in it are secured to prevent motion in transit (fig. 31). In the earlier case, the cable connectors are not secured. The contents of both cases are identical.

b. Replacing the contents of the later-type accessory case requires that the cable assemblies and cords be wound and secured in a special manner so that all the components fit into the case. Follow the procedure given below:

(1) Insert the male connector of Electrical Special Purpose Cable Assembly CX–2256/U into the receptacle mounted on the left-hand side of the rear of the compartment, and twist the connector clockwise.

(2) Insert the male connector of Electrical Power Cable Assembly CX–2258/U into the receptacle mounted on the right-hand side of the rear of the compartment, and twist the connector clockwise.

(3) Coil Electrical Special Purpose Cable Assembly CX–2257/U into three loops, engage its connectors together, and twist the male connector clock-

wise. Place the coiled and locked cable assembly into the larger lower compartment with the connectors toward the rear of the compartment. Be careful that the two pieces of the web strap do not become entangled in the cable assembly.

(4) Coil Electrical Power Cable Assembly CX–2258/U into the compartment and engage its female connector into the male receptacle mounted on the left-hand side of the compartment, and twist it clockwise.

(5) Coil Electrical Special Purpose Cable Assembly CX–2256/U into the compartment and engage its female connector into the male receptacle mounted on the right-hand side of the compartment, and twist it clockwise.

(6) Fasten the web strap of the compartment in which the cable assemblies were stored; slip the end of the strap between the buckle and the strap to prevent its loosening.

(7) Coil Electrical Special Purpose Cable Assembly CX–2252/U 2½ turns, place it in the second high and narrow compartment from the right-hand side of the case, and secure its connectors in place.

(8) Coil Electrical Special Purpose Cable Assembly CX–2253/U 1½ turns, place it in the large upper compartment, and secure its connectors in place.

(9) Coil the lower portion of Telephone Cable Assembly CX–1512/U in several loops. Place the wound portion on top of Electrical Special Purpose Cable Assembly CX–2253/U. Remove the assembly cover, insert the connector into the hole in the right-hand side of the compartment, and replace cover to secure the connector in place. Fasten the compartment web strap around Electrical Special Purpose Cable Assembly CX–2253/U and the coiled portion of Telephone Cable Assembly CX–1512/U ((6) above).

(10) Wrap the cord of Handset H–90/U around the handset and insert the handset into the lower right-hand compartment of the case. Insert the cord connector into the circular retaining ring at the top of the compartment, and tighten the retaining-ring screw to secure the connector in place.

(11) Screw the spare incandescent lamp into the socket mounted in the rear of the compartment next to the one where Electrical Special Purpose Cable Assembly CX–2253/U is stored. Place Radio Frequency Cable Assembly CG–1031/U into the compartment and secure its connectors in place.

(12) Insert the trouble lamp assembly with its cord wound around the assembly handle into the compartment next to the one where the spare incandescent lamp and Radio Frequency Cable Assembly CG–1031/U are stored. Wind the cord of the trouble lamp as follows to make the assembly fit into the compartments.

(*a*) Place the plug against the handle so that the end with the prongs is approximately one-eighth inch from the bottom of the handle.

(*b*) Wrap the cord around the handle in two layers, starting and ending at the bottom of the shield clamp.

(*c*) Insert the remaining length of cord (approximately 8 inches) through the lamp shield.

(13) Insert the manuals, circuit labels, and running spares drawer into the appropriate remaining compartments of the case.

Note. The compartment at the upper right-hand side of the case is for the storage of circuit labels. The circuit labels are secured to the transit cases of the components of Radio Set AN/TRC–24 during shipping.

73. Cabling Check

Check the cabling by referring to figure 85 and the cables chart given in paragraph 71. Be sure that each cable is securely fastened.

74. Connections to Spiral-Four Cable

When connecting Radio Set AN/TRC–24 to spiral-four cable, proceed as follows:

Caution: Dangerous voltages are at the terminals of the spiral-four cable. When connecting spiral-four cable from AN/TCC–7 terminal equipment or AN/TCC–8 repeater equipment,

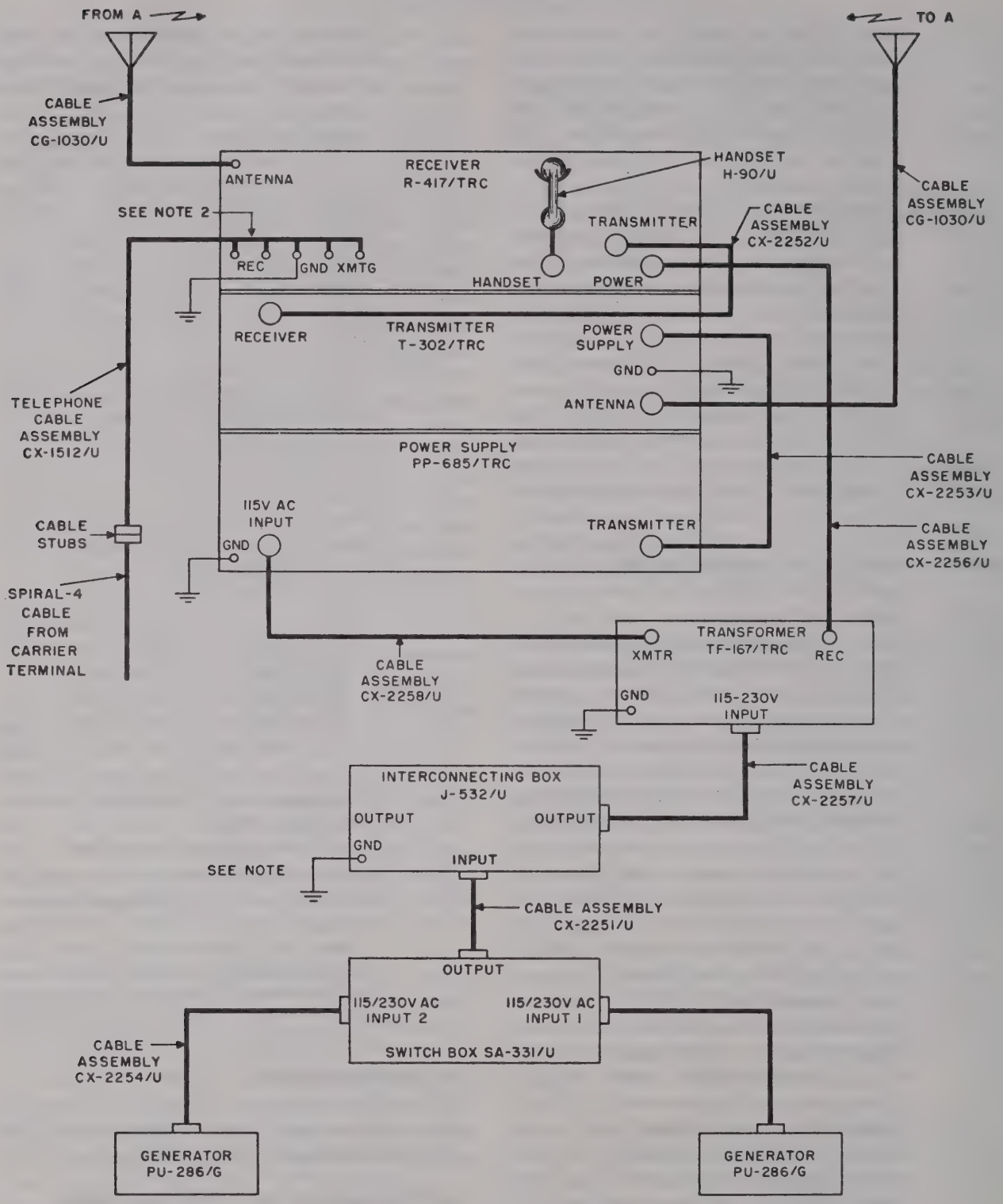

NOTES:

ALL GND TERMINALS INTERCONNECTED AND GROUNDED TO GROUND ROD MX-148/G.

TM687-403

Figure 85. Radio Set AN/TRC-24, cabling diagram.

be sure that Power Supply PP–826/U or PP–827/U in the telephone equipment is turned off.

a. Remove Telephone Cable Assembly CX–1512/U from Accessory Kit MK–133/TRC in which it is shipped.

b. Telephone Cable Assembly CX–1512/U, which is approximately 12 feet long, has five open wires at one end and a covered cable connector at the other end. Unscrew the cable connector cover and determine, by measuring with an ohmmeter, which two wires go to the male portion of the connector and which two wires go to the female portion of the connector.

c. Connect the two wires that go to the *female* portion of the connector to the REC binding posts on the receiver.

d. Connect the two wires that go to the *male* portion of the connector to the XMTG binding posts on the receiver.

e. Connect the fifth wire, which is attached to the cable-stub shield, to the GND binding post of the receiver.

f. The connector on the end of Telephone Cable Assembly CX–1512/U mates with an identical connector on the end of the spiral-four cable. Couple the cable-stub connector to the connector on the end of the spiral-four cable as follows:

(1) Unscrew the metal cap that covers the connectors on the cables.
(2) Aline the connector terminals.
(3) Fix the connectors together.
(4) Move the cable grip forward to the connector casting.
(5) Rotate the cable grip to the lock position.

75. Connections to Telephone Terminals or Telephone Repeaters

Follow the procedure outlined in *a*, *b*, and *c* below to connect Radio Set AN/TRC–24 to a telephone terminal or repeater (AN/TCC–3, AN/TCC–5, AN/TCC–7, or AN/TCC–8).

a. Connect the five wires of Telephone Cable Assembly CX–1512/U to the receiver as described in paragraph 74.

b. If the telephone terminal or repeater to which the radio set is to be connected is located within 12 feet of the radio set, couple the cable-stub connector directly to the telephone equipment.

c. If the telephone terminal or repeater is located more than 12 feet from the radio set, connect a length of spiral-four cable between the cable stub and the telephone equipment.

76. Connections at Radio-Relay Points

A radio-relay point has two radio sets operating back to back. Follow the procedure outlined in *a* through *d* below to make connections at radio-relay points.

a. Interconnect the components of each of the two radio sets at a repeater point (par. 71).

b. Connect one Telephone Cable Assembly CX–1512/U to each receiver (par. 74*a* through *e*).

c. If the radio sets are within 24 feet of each other, couple the cable-stub connectors together (par. 74*f*(1) through (5)) as shown in figure 86.

d. If the radio sets are more than 24 feet apart, couple the cable-stub connector of each radio set to the connector at either end of an appropriate length of spiral-four cable.

77. Connections When Dropping Traffic Channels at Radio-Relay Points

To drop one or more traffic channels at radio-relay point, make connections as follows:

a. Connect the components of the two radio sets at a relay point (par. 71).

b. Connect one Telephone Cable Assembly CX–1512/U to each receiver (par. 74*a* through *e*).

c. Place two telephone terminals of the type used in the system (AN/TCC–3 or AN/TCC–7) in a convenient position near the radio sets.

d. Couple the cable-stub connector from one radio set to one of the two telephone terminals; couple the cable-stub connector from the second radio set to the other telephone terminal. If a telephone terminal is separated by more than 12 feet from the radio set, use spiral-four cable between the telephone terminal and the cable stub connected to the radio set.

e. Connect the telephone terminals back to back by using the procedure outlined in the applicable manual.

78. Initial Checks

a. Check all cable connections to the transmitter and receiver.

b. Check all power connections at the switch box, interconnecting box, and autotransformer.

c. Use an ac voltmeter and check the input

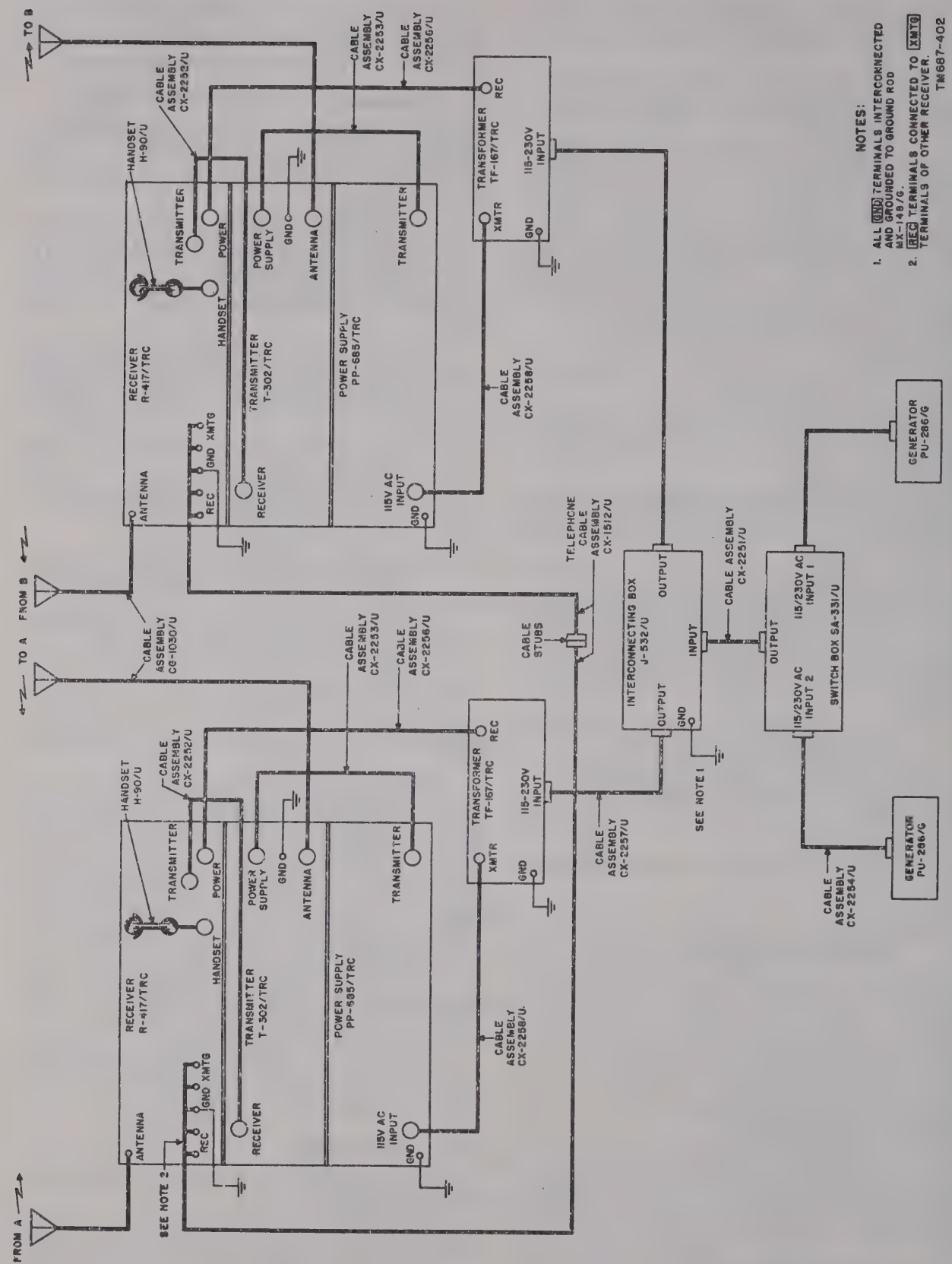

Figure 86. Connections at radio-relay points.

to Power Supply PP–685/TRC. Be sure the source voltage connection link located internally in Interconnecting Box J–532/U is in the correct position for the voltage input. Be sure the 115V AC switch on the power supply is in the OFF position.

d. Be sure all tubes are tight in their sockets.

e. Check to see that the transmitter and receiver tuners and dummy filters are securely in place.

f. Check to see that the transmitter, receiver, and power supply chassis are secured in their respective transit cases.

79. Service Upon Receipt of Used or Reconditioned Equipment

a. Follow the instructions in paragraph 63 for uncrating, unpacking, and checking the equipment.

b. Check the used or reconditioned equipment for tags or other indications of changes in the wiring of the equipment. If any changes in wiring have been made, note the change in this manual, preferably on the schematic diagrams.

c. Check to see that the operating controls move freely. If not, refer to the maintenance instructions in paragraphs 139 through 144.

d. Perform the applicable installation and connection procedures described in paragraphs 64 through 78.

CHAPTER 3

OPERATION

Section I. CONTROLS AND INSTRUMENTS

80. Radio Transmitter T–302/TRC Controls
(fig. 87)

The following chart lists the front-panel co ntrols of the radio transmitter and indicates what they do.

Control or instrument	Function
INPUT ADJ control (R101)	A knob-controlled potentiometer used to adjust the incoming base-band signal in 1-db steps to compensate for differences in spiral-four cable loss and other signal level variations. This potentiometer has an OFF position and 30 steps of 1 db each. The normal setting is 15.
1KC ADJ control (R141)	A screwdriver-controlled potentiometer that is adjusted during the radio-system lineup and the overall lineup; it adjusts the output level of the 1-kc oscillator to zero level.
DISCR RF DRIVE control (R139)	A screwdriver-controlled, two-section, ganged potentiometer; this control is used to adjust the gain of the afc limiter section to a reference level.
MOD ADJ control (R104)	A screwdriver-controlled potentiometer that adjusts the magnitude of the input signal to the base-band amplifier to compensate for minor differences in modulation sensitivity across the rf band and differences in gain after tubes are replaced.
MTR CAL control (R134)	A screwdriver-controlled potentiometer that adjusts the overall gain of the meter amplifiers.
DISCR CENTER control (L134)	A screwdriver-controlled powdered-iron core, used to tune the afc discriminator.
MEASURE meter (M101)	A d-c microammeter in the transmitter measuring circuit meter. The meter scale is marked from −4 to +3 db and from 0 to 50 microamperes (ua). −4-db indication corresponds to 22 microamperes and a +3-db indication corresponds to 50 microamperes. This meter is used during system lineup to measure the magnitude of the test signals received from the distant telephone terminal and the modulation level produced by the test signals. The measuring circuit is designed so that a normal signal causes 0-db indication on this meter's signal-level measurements. A meter reading other than normal for the particular measurement, indicates the need for adjustment or the presence of trouble (par. 179). Another use of the meter is to check the adjustment and operation of the circuits of the transmitter.
MEASURE switch (S102)	A knob-controlled, nine-position, ganged, rotary-wafer switch. It connects the transmitter MEASURE meter circuit so that the magnitudes of test signals and signals in various circuits of the transmitter can be read on the transmitter MEASURE meter. In the RF CHAN TUNE position, this switch connects part of the output of the third afc if amplifier to the transmitter MEASURE meter circuit. The transmitter MEASURE meter indicates a maximum in this position when the RF CHANNEL TUNE control (L102) is adjusted accurately to

Control or instrument	Function
	an rf channel. The RF CHAN TUNE position of the MEASURE switch is used while tuning in an rf channel (see par. 98). In the 1KC ADJ position, this switch connects the output of the 1-kc local oscillator to the MEASURE meter. This position of the switch is used while adjusting the output of the 1-kc local oscillator to a reference level. The 1KC ADJ control (see 1KC ADJ control above) is adjusted in the 1KC ADJ position of the MEASURE switch to give a 0-db reading on the MEAS-. URE meter. 1-kc signals are coupled to the receiver for calibrating the. receiver MEASURE meter circuit in this position of the switch. In the MTR CAL position, this switch connects the output of the 1-kc local oscillator to the measuring circuit. This position of the switch is used while adjusting the gain of the meter amplifiers (of measuring circuit) to a reference level. The MTR CAL control (see MTR CAL control above) is adjusted in the MTR CAL position of the MEASURE switch to give a 0-db reading on the MEASURE meter. In the DISCR RF DRIVE position, this switch connects a rectified output of the afc discriminator to the MEASURE meter. This position of the switch is used while adjusting the gain of the second limiter stage to maintain the rf input to the afc discriminator at a reference level. The DISCR RF DRIVE control (see DISCR RF DRIVE control above) is adjusted in the DISCR RF DRIVE position of the MEASURE switch to give a 0-db reading on the MEASURE meter. In the 1KC IN position, this switch connects the measuring circuit across the input from the spiral-four cable stub. The level of the received 1-kc test signal transmitted over the system during the overall system lineup (from a source external to the transmitter) is read on the MEASURE meter with the switch in this position. In the 68KC IN position, this switch connects the measuring circuit across the input from the spiral-four cable stub. The level of the received 68-kc pilot signal (transmitted through the system when the radio set is used with 12-channel telephone equipment) is read on the MEASURE meter with the switch in this position. In the MOD 1KC IN position, this switch connects the 1-kc output of the afc discriminator to the measuring circuit. The 1-kc test signal (transmitted through the system from a source external to the transmitter during system lineup) modulates the carrier. The relative amount of deviation of the transmitter caused by this 1-kc test signal is indicated on the MEASURE meter with the switch in this position. This switch position may be used to adjust the INPUT ADJ control (see INPUT ADJ control above). In the MOD 68KC IN position, this switch connects the 68-kc output of the afc discriminator to the measuring circuit. The 68-kc pilot signal, which is transmitted over the system, modulates the carrier. The relative amount of deviation of the transmitter caused by this 68-kc pilot signal is indicated on the MEASURE meter with the switch in this position. This switch position can be used to adjust the INPUT ADJ control (see INPUT ADJ control above). In the MOD ADJ position, this switch connects the output of the local 1-kc oscillator to the base-band amplifier and the output of the afc discriminator to the measuring circuit. This position of the switch is used while adjusting the modulation sensitivity of the transmitter. The MOD ADJ control (see MOD ADJ control above) and MOD TRIM control (see MOD TRIM control below) are adjusted in the MOD ADJ position of the MEASURE switch.
MTR SENS switch (S101)	This is a two-position toggle switch that locks in the normal position and is nonlocking in the INCR position. The switch is held in the INCR position to increase the sensitivity of the MEASURE meter while tuning the reactance modulator with the MOD TRIM control (see MOD TRIM control below).
MOD TRIM control (C131)	A screwdriver-controlled variable capacitor that tunes the reactance modulator circuit. When the MTR SENS (MOD ADJ ONLY) switch is held in the INCR position with the MEASURE switch in the MOD ADJ position, the

Control or instrument	Function
	MOD TRIM control is adjusted for a maximum reading on the MEASURE meter.
AFC switch (S108)	A two-position toggle switch. In the ON position, this switch connects the output of the afc discriminator to the 60-cps modulator and the output of the 60-cps amplifier to the afc motor. The afc circuits in this position of the switch automatically control the center frequency of the base rf oscillator. In the OFF position of this switch, the inputs to the 60-cps modulator and the afc motor are disconnected and there is no automatic frequency control.
XTAL SEL switch (S106)	A knob-controlled, three-position rotary-wafer switch with two locking and one nonlocking positions. This switch connects the correct crystal and circuit elements for the crystal oscillator to produce either 2.5, 1.0, or 10.125 mc. In the DECADE CHANS position of this switch, the crystal oscillator produces a 2.5-mc signal. Harmonics of this 2.5-mc signal provide frequencies that are used to tune to the nearest tenth rf channel (see par. 98) In the UNIT CHANS position of this switch, the crystal oscillator produces a 1.0-mc signal. This 1.0-mc signal synchronizes the .5-mc pulse generator. Harmonics of .5 mc, which are produced by the .5-mc pulse generator, provide frequencies that are used both while tuning to the desired rf channel and for automatically controlling the frequency. The DISCR CENTER position is a nonlocking position. When the XTAL SEL switch is held in this position, the crystal oscillator produces a 10.125-mc signal that is applied to the afc if amplifiers. The other source of if is removed at this time. This 10.125-mc signal is used to tune the afc discriminator. When the XTAL SEL switch is held in the DISCR CENTER position, the DISCR CENTER control (see DISC CENTER control above) is adjusted to give a 0 reading on the FREQ DRIFT meter.
PULSED OSC TUNE control (L120)	A knob-controlled variable inductor that adjusts the frequency of the pulsed oscillator for proper afc operation. This control is adjusted in conjunction with the PULSED OSC switch (see PULSED OSC switch below) to the desired channel.
PULSED OSC switch (S109)	A knob-controlled two-position rotary-wafer switch that is used to switch the afc system operation from an odd- to an even-numbered channel or vice versa. In the ODD CHANNELS position, this switch connects the afc system for odd-numbered channels as indicated on the PULSED OSC TUNE dial. The PULSED OSC TUNE dial, calibrated for odd channels, is on the left of the PULSED OSC switch and is visible only when this switch is set to ODD CHANNELS. In the EVEN CHANNELS position, this switch connects the afc system for even-numbered channels as indicated on the PULSED OSC TUNE dial. The PULSED OSC TUNE dial, calibrated for even channels, is on the right of the PULSED OSC switch and is visible only when this switch is set to EVEN CHANNELS.
RF CHANNEL TUNE control (L103)	A knob-controlled four-section variable inductor that tunes the base rf oscillator for operation on a desired rf channel. The RF CHANNEL dial, which is located above the RF CHANNEL TUNE control, is geared to this control. The RF CHANNEL dial is marked with the numbers of the rf channels and gives an approximate indication of the position of the RF CHANNEL TUNE control.
LOCK control	A knob-controlled mechanical lock, used to secure the RF CHANNEL TUNE dial on any desired setting. Clockwise rotation of this control locks the RF CHANNEL TUNE dial and counterclockwise rotation of this control unlocks the dial.
INDEX control	A knob-controlled mechanical link used to adjust the index line of the RF CHANNEL TUNE dial. Clockwise rotation of this control moves the index line to the right; counterclockwise rotation moves the index line to the left.
FREQ DRIFT meter (M103)	A zero-center-reading dc microammeter; it measures the magnitude of the dc component of the output from the afc discriminator. The meter scale is marked from −50 to +50 microamperes. During normal operation, the meter gives a 0 indication. In addition, the indication on this meter is checked while adjusting the DISCR CENTER control (see DISCR CENTER

Control or instrument	Function
	control above) and while setting the RF CHANNEL TUNE control (see RF CHANNEL TUNE control above).
AFC control (C145)	A knob-controlled shaft attached to the afc capacitor and to the afc motor. This shaft provides manual control of the afc capacitor. The afc capacitor normally is controlled by the afc motor when the transmitter afc switch is in the ON position. The dial scale of this control is numbered in single units, in a clockwise direction from −5 to −1, 0, and +1 to +5.
DRIVER TUNE control (L110)	A knob-controlled variable inductor used to tune the plate circuit of the driver stage. The driver stage functions as an amplifier for band A and as a frequency doubler for bands B, C, and D. The dial associated with this control is located above and to the left of the control and is marked with the numbers of the rf channels. The A-band portion of the DRIVER TUNE dial is marked with white numerals on a black background. The B-, C-, and D-band portions of the DRIVER TUNE dial are marked with black numerals on a white background.
DRIVER OUTPUT COUPLING control (C184).	A screwdriver-controlled variable capacitor used to adjust the coupling between the driver stage and the rf tuners.
	The DRIVER OUTPUT COUPLING dial, which is located to the right of the DRIVER OUTPUT COUPLING control, is associated with this control.
TEST METER (M102)	A dc microammeter used in the TEST meter circuit. The meter scale is marked from 0 to 50 microamperes. This meter indicates the operating currents in various rf stages in the transmitter as determined by the position of TEST switch (S104) below.
TEST switch (S104)	A knob-controlled, nine-position, ganged, rotary-wafer switch. This switch connects the test meter circuit so that the magnitude of operating currents in various stages of the transmitter is indicated on the TEST meter.
	In the OSC MOD PLATE position, this switch connects the base rf oscillator and reactance modulator plate circuits to the TEST meter. The sum of the operating plate currents in the base rf oscillator and the reactance modulator can be read on the TEST meter.
	In the DRIVER GRID position, this switch connects the driver grid circuit to the TEST meter. The magnitude of the driver grid operating current can be read on the TEST meter.
	In the DRIVER CATCH position, this switch connects the driver cathode circuit to the TEST meter. The magnitude of the driver cathode operating current can be read on the TEST meter.
	In the MULT GRID position, this switch connects the multiplier grid circuit of the C-band tuner (when this tuner is used in the transmitter) to the TEST meter. The magnitude of the multiplier grid operating current is shown on the TEST meter. When the B-band tuner is used in the transmitter, this position of the switch does not connect any circuit to the TEST meter and therefore is not used.
	In the MULT CATH position, this switch connects the multiplier cathode circuit of the C-band tuner (when this tuner is used in the transmitter) to the TEST meter. The magnitude of the multiplier cathode operating current is read on the TEST meter. When the B-band tuner is used in the transmitter, this position of the switch is not used.
	In the PWR AMPL GRID position, this switch connects the power-amplifier grid circuit of the transmitter rf tuner to the TEST meter. The magnitude of the power-amplifier grid operating current is then read on the TEST meter.
	In the PWR AMPL CATH position, this switch connects the power-amplifier cathode circuit of tke transmitter rf tuner to the TEST meter. The magnitude of the power-amplifier cathode operating current is then read on the TEST meter.
	In the FWD PWR position, this switch connects the forward-power section of the directional coupler to the TEST meter. The amount of forward current flowing toward the antenna is then read on the TEST meter and is roughly proportional to the forward power at the antenna.
	In the REFL PWR position, this switch connects the reflected-power section of the directional coupler to the TEST meter. The amount of reflected rf

Control or instrument	Function
	current is then read on the TEST meter and is roughly proportional to the rf power reflected due to mismatch.
LOW PWR ALARM lamp (I 101)	A red lamp that is lighted whenever the transmitter rf output power falls below a given reference level. This reference level is set by the adjustment of the THRESHOLD ADJ control (see THRESHOLD ADJ control below).
THRESHOLD ADJ control (R191)	A screwdriver-controlled potentiometer used to adjust the level at which the LOW POWER ALARM lamp is lighted. When the rf output power from the transmitter falls below this reference level, the LOW PWR ALARM lamp (see LOW PWR ALARM lamp above) lights and the buzzer may sound as indicated below (buzzer I 102).
Buzzer (I 102)	The buzzer provides audible indications under one of two conditions. When the ALARM switch (see ALARM switch (S105) below) is in the NOR position, the sounding of the buzzer indicates that the rf power output level of the transmitter is too low. When the ALARM switch is in the REV position, the sounding of the buzzer indicates that rf power output is greater than the reference level (see THRESHOLD ADJ control above).
ALARM switch (S105)	This is a three-position toggle switch used as an on, off, or reversing switch for the transmitter buzzer (see buzzer above). In the NOR position, this switch connects the buzzer so that the buzzer will sound whenever the transmitter rf output power falls below a reference level. In the OFF position, this switch disconnects the buzzer so that it will not sound. In the REV position, this switch connects the buzzer to the low-power alarm circuit so that it will sound whenever the transmitter rf output power is above the reference level.
Dust cover	A two-position handle-controlled cover that protects certain screwdriver controls from dust in one position and uncovers these controls in the other position. The 1KC ADJ, MTR CAL, DISCR CENTER, DISCR RF DRIVE, and MOD ADJ controls are protected by this cover. The handle for this control is located between the DISCR RF DRIVE and the MOD ADJ controls on the front panel of the transmitter.
Vibration mount lock control	A manually controlled mechanical lock that is used to secure the exciter chassis while the transmitter is being shipped. This control, which is on the middle left side of the transmitter front panel, is left in the pulled out position during operation. With this control pulled out, the exciter chassis is shock-mounted to protect it against excessive vibration.

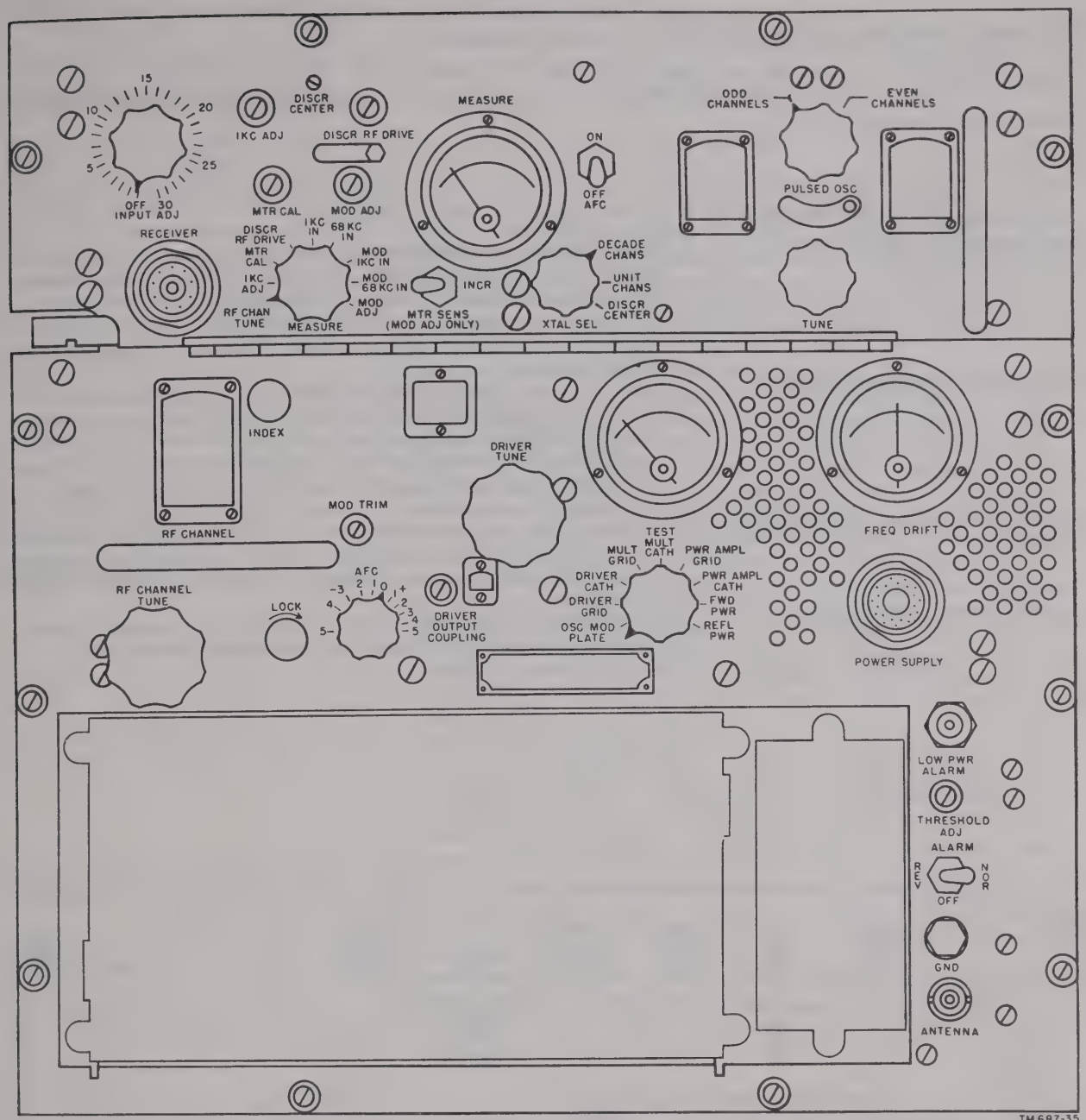

Figure 87. Radio Transmitter T–302/TRC, front panel.

81. Radio Frequency Amplifier AM–912/TRC Controls
(fig. 88)

The following chart lists the front-panel controls of the transmitter B-band rf tuner and indicates what they do.

Control or instrument	Function
GRID control (Z1) and GRID dial	A knob-controlled adjustable shorting plunger that adjusts the length of the grid cavity and thereby tunes the grid circuit of the tuner power amplifier. The GRID dial, located above and to the right of the GRID control, is connected to this control. The GRID dial is marked with the numbers of the rf channels and gives an approximate indication of the position of the GRID control.
PLATE control (Z2) and PLATE dial	A knob-controlled adjustable shorting plunger used to adjust the length of the plate cavity and thus tune the plate circuit of the tuner power amplifier. The PLATE dial, located above and to the right of the PLATE control is connected to this control. The PLATE dial is marked with the numbers of the rf channels and gives an approximate indication of the position of the plate control.
AMPLIFIER OUTPUT COUPLING control (C18).	A knob-controlled variable capacitor that adjusts the output coupling of the tuner amplifier. This control is adjusted to give a maximum output power. The dial scale of this control is arbitrarily numbered in a clockwise direction from 0 to 12.
SCREEN VOLTS ADJ control (R2)	A screwdriver-controlled potentiometer that adjusts the voltage of the regulated +200- to +350-volt output from Power Supply PP–685/TRC.

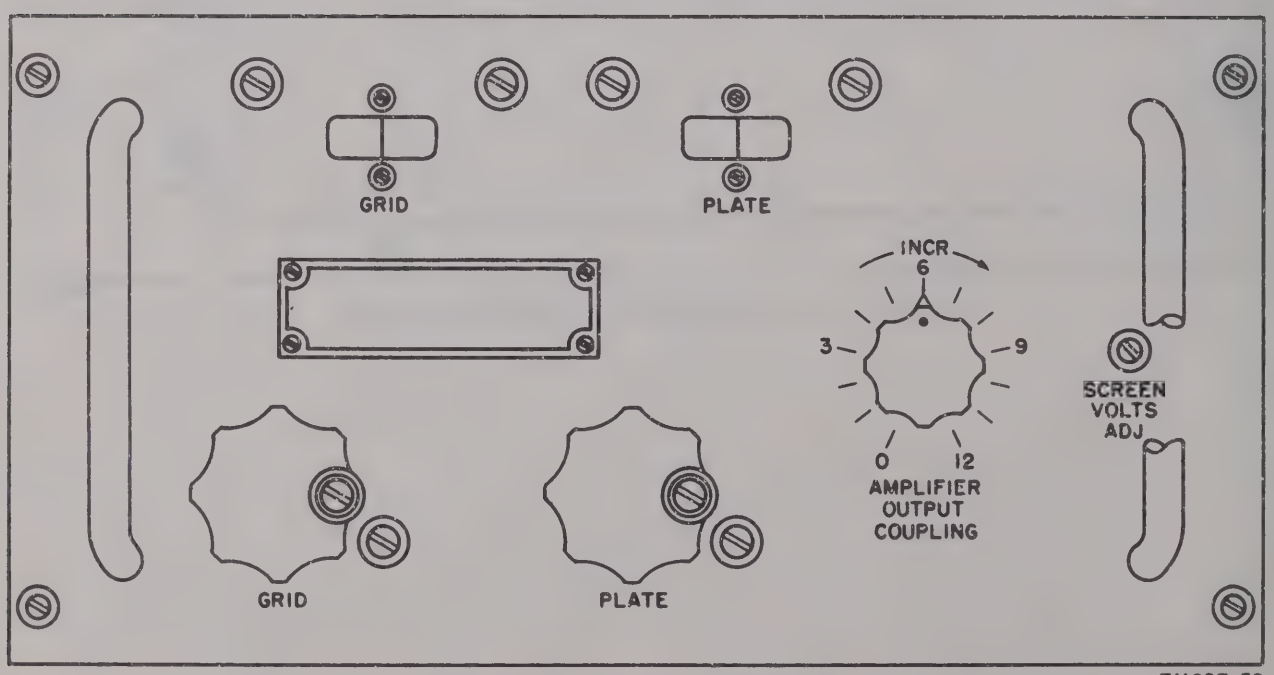

Figure 88. Radio Frequency Amplifier AM–912/TRC, front panel.

82. Radio Frequency Amplifier-Multiplier AM–915/TRC Controls (fig. 89)

The following chart lists the front panel controls of the transmitter C-band rf tuner and indicates what they do.

Control or instrument	Function
MULTIPLIER GRID control (Z2)	A knob-controlled adjustable shorting plunger that adjusts the length of the grid cavity; it tunes the grid circuit of the tuner frequency multiplier. The MULTIPLIER GRID dial, located above and to the right of the MULTIPLIER GRID control knob, is geared to this control. The MULTIPLIER GRID dial is marked with the numbers of the rf channels and gives an approximate reading of the rf channel to which the MULTIPLIER GRID control is set.
MULTIPLIER PLATE control (Z1)	A knob-controlled adjustable shorting plunger used to adjust the length of the plate cavity; it tunes the plate circuit of the tuner frequency multiplier. The MULTIPLIER PLATE dial, located to the right of the MULTIPLIER PLATE control knob, is connected to this control. The MULTIPLIER PLATE dial is marked with the numbers of the rf channels; it gives an approximate indication of the position of the MULTIPLIER PLATE control.
MULTIPLIER OUTPUT COUPLING control (C16).	A knob-controlled variable capacitor that adjusts the coupling between the tuner frequency multiplier and power amplifier. The dial scale of this control is arbitrarily numbered in a clockwise direction from 0 to 12.
POWER AMPLIFIER GRID control (Z4)	A knob-controlled adjustable shorting plunger used to adjust the length of the grid cavity; it tunes the grid circuit of the tuner power amplifier. The POWER AMPLIFIER GRID dial, located above and to the right of the POWER AMPLIFIER GRID control knob, is connected to this control. The POWER AMPLIFIER GRID dial is marked with the numbers of the rf channels and gives an approximate indication of the position of the POWER AMPLIFIER GRID control.
POWER AMPLIFIER PLATE control (Z3).	A knob-controlled adjustable plunger that adjusts the length of the plate cavity; it tunes the plate circuit of the tuner power amplifier. The POWER AMPLIFIER PLATE dial, located to the right of the POWER AMPLIFIER PLATE control knob, is connected to this control. The PLATE DIAL is marked with the numbers of the rf channels. It gives an approximate indication of the position of the POWER AMPLIFIER PLATE control.
AMPLIFIER OUTPUT COUPLING control (C28).	A knob-controlled variable capacitor that adjusts the output coupling of the tuner power amplifier. The control is adjusted to produce maximum output power. The dial scale of this control is arbitrarily numbered in a clockwise direction from 0 to 12.
SCREEN VOLTS ADJ control (R2)	This is a screwdriver-controlled potentiometer that adjusts the voltage of the regulated +200- to +350-volt output from Power Supply PP–685/TRC.

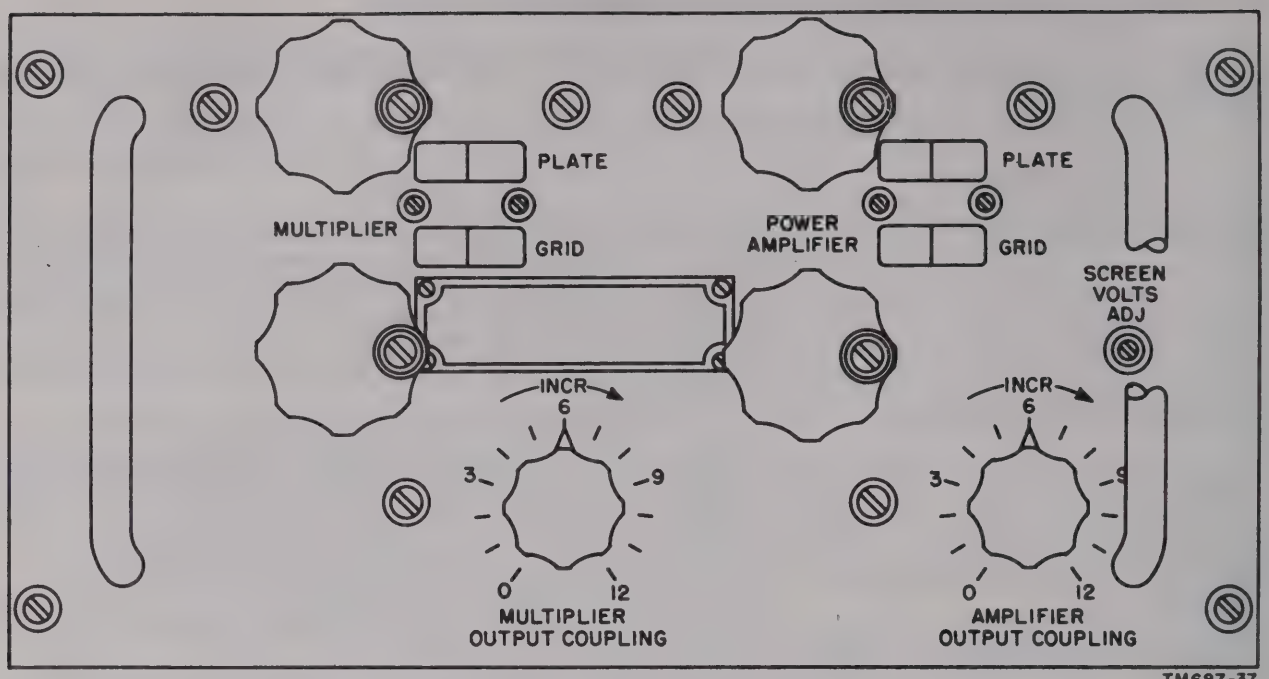

Figure 89. Radio Frequency Amplifier AM–915/TRC, front panel.

83. Power Supply PP–685/TRC Controls
(fig. 90)

The following chart lists the front-panel controls of Power Supply PP–685/TRC and indicates what they do.

Control or instrument	Function
115V AC switch (CB1)	A circuit-breaker on-off switch for the ac input to the power supply. This switch also provides protection against overloads.
150V DC switch (CB3)	A circuit-breaker on-off switch for the +150-volt output of the power supply. This switch also provides protection against overloading the regulated +150-volt supply.
750V DC switch (CB2)	A circuit-breaker switch that is an on-off switch for the +750-volt output of the power supply. This switch also provides protection against overloading the +750-volt supply.
AC VOLTS meter (M1)	An ac voltmeter used to indicate the voltage of the ac input voltage to the power supply. The meter scale is marked from 0 to 150 volts ac.
DC VOLTS meter (M2)	A dc voltmeter used to measure the output voltage of the +150-, the +200- to +350-, or the +750-volt dc supply. The position of the DC TEST switch (see DC TEST switch below) determines which one of the three output voltages this meter will indicate. Two voltage scales are marked on the meter face. The upper meter scale is marked from 0 to 300 volts dc and the lower meter scale is marked from 0 to 900 volts dc.
DC TEST switch (S3)	A three-position rotary switch that connects the DC VOLTS meter to read the output of the +150-, the +200- to +350-, or the +750-volt dc supply In the 150 UPPER SCALE position, the switch connects the DC VOLTS meter to the output of the regulated +150-volt supply. This switch position is used while adjusting the 150V ADJ control (see 150V ADJ control below) and while checking the output of the +150-volt supply. The output of this supply is read from the upper scale of the DC VOLTS meter. In the 275 LOWER SCALE position, the switch connects the DC VOLTS meter to the adjustable regulated output of the high-voltage power supply. This output is adjustable from +200 to +350 volts by adjustment of the

Control or instrument	Function
	SCREEN VOLTS ADJ control on the transmitter rf tuners (pars. 81 and 82). The output of this regulated supply is read from the lower scale of the DC VOLTS meter. In the 750 LOWER SCALE position the switch connects the DC VOLTS meter to a voltage divider across the output of the unregulated high-voltage supply. The 750V ADJ switch (see 750V ADJ switch below) adjusts the unregulated high-voltage output from +300 to +900 volts. The output of this unregulated supply is read from the lower scale of the DC VOLTS meter.
750V ADJ switch (S2)	A six-position rotary switch that adjusts the output voltage from the +750-volt dc supply. When the ac input voltage to the power supply is 115 volts (indicated on the AC VOLTS meter; see AC VOLTS meter above), the output of the +750-volt dc supply is as follows. The output from the +250- to +350-volt supply varies proportionately as the output from the +750-volt supply. In switch position 1, the output is +300 volts ±20 volts. In switch position 2, the output is +650 volts ±25 volts. In switch position 3, the output is +700 volts ±30 volts. In switch position 4, the output is +750 volts ±30 volts. In switch position 5, the output is +800 volts ±35 volts. In switch position 6, the output is +850 volts ±35 volts.
150V DC lamp (I 2)	This lamp lights when ac power is applied to the +150-volt supply (see 150V DC switch above) and is extinguished when ac power is disconnected from the +150-volt supply. This lamp has an adjustable dimmer and reflects through an amber-colored jewel.
FIL lamp (I 3)	This lamp lights when ac power is applied to the power supply (see 115V AC switch above) and is extinguished when ac power is disconnected from the power supply. This lamp has an adjustable dimmer and reflects through an amber-colored jewel.
750V DC lamp (I 1)	This lamp lights when ac power is applied to the +750-volt supply (see 750V DC switch above) and is extinguished when ac power is disconnected from the +750-volt supply. This lamp has an adjustable dimmer and reflects through an amber-colored jewel.
150V ADJ control (R15)	A screwdriver-controlled potentiometer that adjusts the output of the +150-volt power supply.

84. Autotransformer Fixed Power Transformer TF–167/TRC Controls
(fig. 91)

The INCR OUT switch (S1) is an adjustable control on the front panel of the autotransformer. This control is a six-position rotary switch that adjusts the output of the transformer as close as possible to 115 volts. The different positions of the switch represent taps on the autotransformer and, for any input voltage between 95 and 130 or 190 and 260 volts, the output can be adjusted by the appropriate setting of the switch to 115 ±5.5 volts. Primary power for the autotransformer is obtained through the 115–230V AC INPUT connector. The 230V 10 AMP, COM 20 AMP, and 115V 20 AMP fuses protect the input circuit of the autotransformer from overloads. The rear panel of the autotransformer provides input power for the receiver and power supply at the REC and XMTR outlets. A convenience outlet (CONV OUT), a CONV OUT 5 AMP fuse, and a GND binding post complete the rear panel.

85. Switch Box SA–331/U Controls

Located on the front panel of Switch Box SA–331/U is the power-supply switch (S1). This is a quick action, double-pole, double-throw (dpdt) switch, which is used to transfer the connections of the switch box to one of two alternate sources of ac power. The switch positions are marked NO. 1 and NO. 2 (fig. 26). The rear panel of the switch box contains INPUT connectors NO. 1 and NO. 2, and OUTPUT connector, and a GND binding post (fig. 27).

86. Interconnecting Box J–532 Controls

A source voltage connecting bus bar link in Interconnecting Box J–532/U is used to change connections within the box for either 115-volt

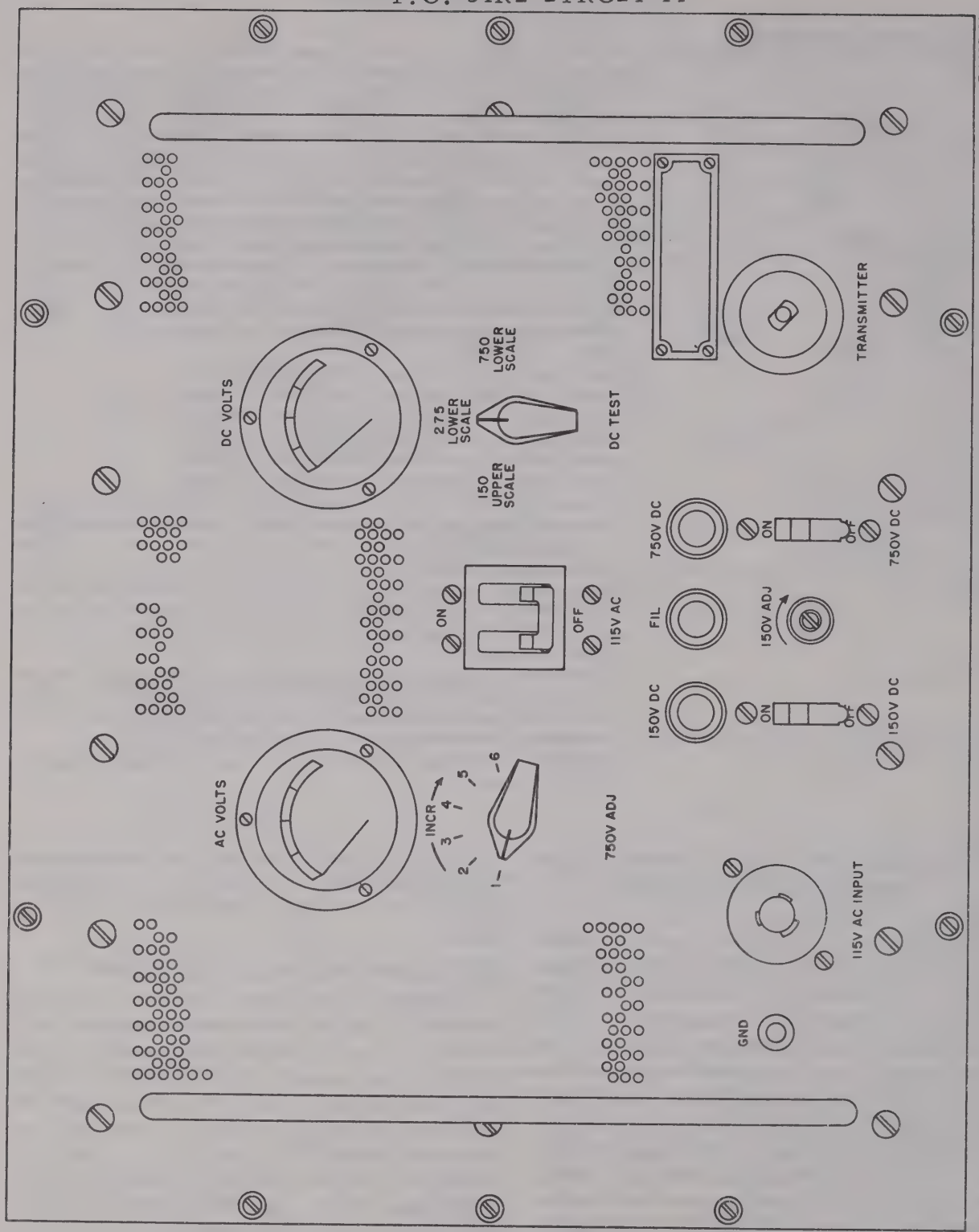

Figure 90. Power Supply PP-685/TRC, front panel.

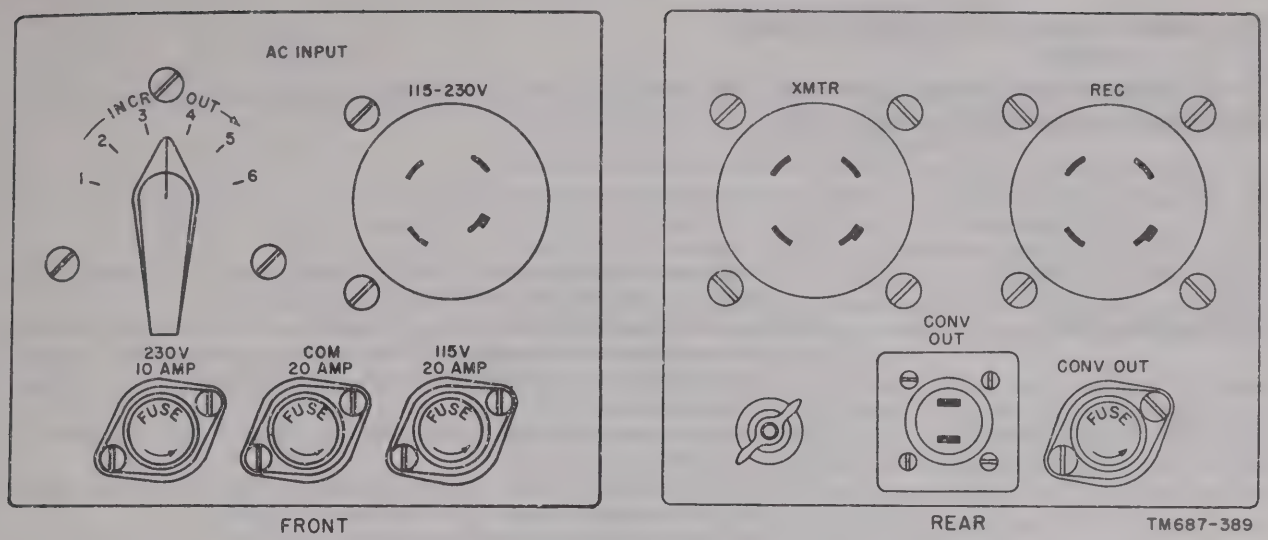

Figure 91. Autotransformer Fixed Power Transformer TF–167/TRC, front and rear panels.

or 230-volt operation (par. 247). The front panel of the interconnecting box contains the AC INPUT 115/230V connector (J1), and a GND binding post (front view, fig. 92). The rear panel contains four convenience outlets (CONV OUT 1 through 4) and two 10 AMP fuse receptacles F1 and F2 (rear view, fig. 92). Each side panel of the interconnecting box contains three OUTPUT connectors (side view, fig. 92).

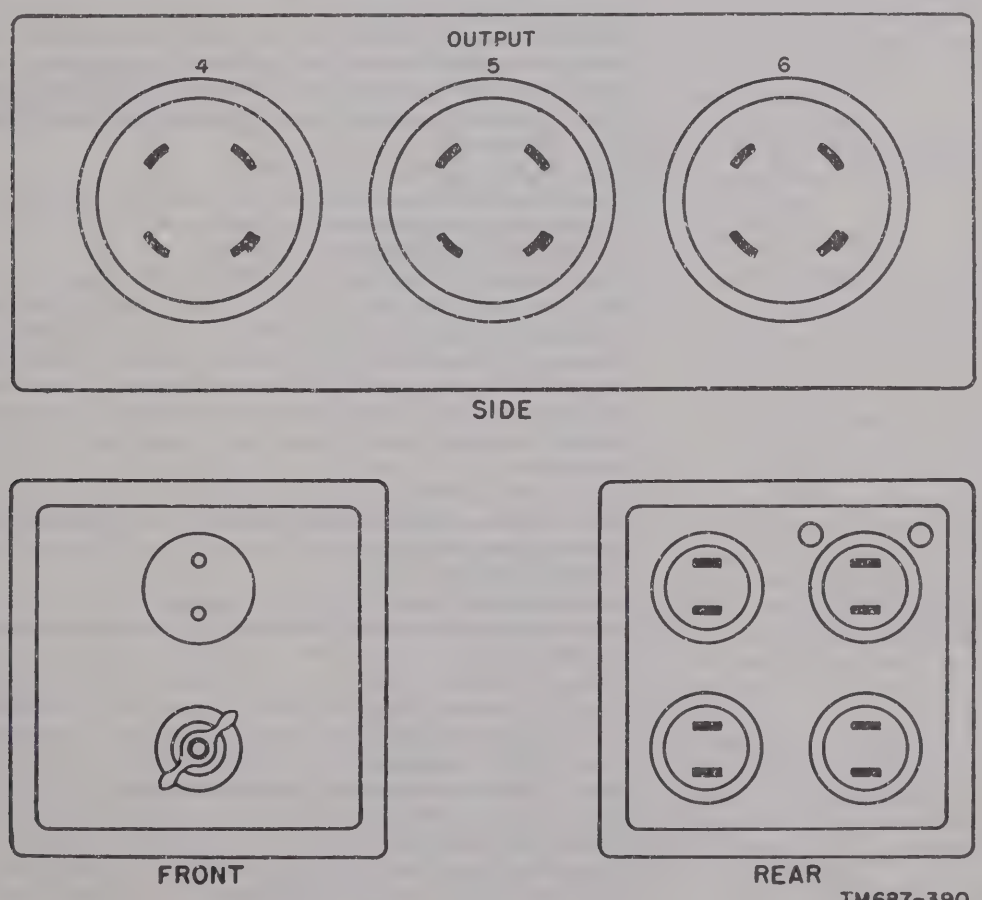

Figure 92. Interconnecting Box J–532/U, front, rear, and side panel controls.

87. Radio Receiver R–417/TRC Controls
(fig. 93)

a. Receiver Front-Panel Controls. The following chart lists the front-panel controls of the radio receiver and indicates what they do.

Control or instrument	Function
POWER switch (CB101)	A circuit-breaker on-off switch for the 115-volt ac input to the receiver. This switch also provides protection against overloads.
POWER lamp (I 101)	This lamp is lighted when ac power is applied to the receiver (see POWER switch above) and is extinguished when ac power is disconnected from the receiver. This lamp is covered by an amber-colored jewel and has an adjustable dimmer.
AFC-OFF-CAL switch (S101)	A three-position, on-off toggle switch for the calibrator and afc circuits of the receiver. In the CAL position, this switch is nonlocking and connects B+ voltage to the calibrator, allowing the calibrator circuit to operate. In the AFC position, this switch connects input ac power to the afc motor, in the receiver tuners, allowing this motor to operate. In the OFF position of this switch, both the calibrator and afc circuits are inoperative.
RING-TALK switch (S105)	A two-position toggle switch that locks in the TALK position and is nonlocking in the RING position. The switch normally is in the locking TALK position. In the TALK position, this switch connects plate and bias voltages to the order-wire circuits. This permits voice transmissions over the order wire from and to the receiver handset. The signaling circuit oscillator is inoperative in this position of the switch. In the nonlocking RING position, this switch connects plate voltage to the 1,600-cps oscillator. The oscillator produces a ringing signal, which is transmitted over the order wire and which causes the RING lamp to light and the buzzer to sound. The handset amplifier circuits are inoperative in this position of the switch.
RING lamp (I 104)	This is a white lamp that is lighted when: A ringing signal is received from a distant station. A ringing signal is transmitted from the receiver. The receiver +150-volt supply voltage fails.
Receiver MEASURE meter (M102)	A dc microammeter that is used as the receiver measuring circuit meter. The meter scale is marked from −4 to +3 db and from 0 to 50 microamperes. −4 db corresponds to 22 microamperes and +3 db corresponds to 50 microamperes. The measuring circuit is designed so that a normal lineup signal (1 kc or 68 kc) causes a 0-db indication on this meter. A meter reading other than 0 db indicates the need for adjustments. This meter is used also while tuning the receiver and to measure the rf signals received from the distant transmitter. This meter also is used to check the adjustment and operation of the circuits of the receiver. A meter reading other than that which is normal for the particular measurement indicates the need for adjustment or the presence of trouble (par. 179).
Receiver MEASURE switch (S106)	A knob-controlled, ten-position, rotary, ganged wafer switch. This switch connects the receiver MEASURE meter circuit so that test signals and signals in various circuits of the receiver are indicated on the receiver MEASURE meter. In the OSC position, this switch connects the receiver MEASURE meter to the grid circuit of the receiver rf tuner local oscillator. The MEASURE meter then indicates the magnitude of the receiver rf tuner oscillator grid current. In the MIX position, this switch connects the receiver MEASURE meter to the grid circuit of the receiver rf tuner mixer. The MEASURE meter then indicates the amount of receiver rf tuner mixer grid current. In the SIG LEV position, this switch connects the receiver MEASURE meter to the age diode. The MEASURE meter then indicates the level of the incoming rf carrier or calibrator signal.

Control or instrument	Function
	In the 1ST LIM position, this switch connects the receiver MEASURE meter to the first limiter crystal diodes. The MEASURE meter then indicates the amount of current in the first limiter crystal diodes.
	In the 2ND LIM position, this switch connects the receiver MEASURE meter to the second limiter crystal diodes. The MEASURE meter then indicates the amount of current in the second limiter crystal diodes.
	In the AFC BAL position, this switch connects the receiver MEASURE meter to the receiver afc circuits. With the switch in this position and the AFC DISABLE switch operated, the reading on the MEASURE meter is an indication of the balance of the afc modulators. (See AFC DISABLE switch and AFC BAL control (*b* below).)
	In the MTR CAL position, this switch connects the receiver MEASURE meter to the receiver meter amplifier circuit. This position of the switch is used while adjusting the gain of the receiver meter amplifier circuit to the correct level; the adjusted 1-kc test signal from the transmitter is used as the reference signal. The ADJ METER control (see ADJ METER control (*b* below)) is used to adjust the gain of the receiver meter amplifier circuit with the MEASURE switch in the MTR CAL position.
	In the 1KC OUT position, this switch connects the receiver MEASURE meter circuit to the output of the receiver. The 1-kc output of the receiver is read on the receiver MEASURE meter with the switch in this position.
	In the 68KC OUT position, this switch connects the receiver MEASURE meter circuit to the output of the receiver. The 68-kc output of the receiver is then read on the MEASURE meter.
	In the B+ position, this switch connects the receiver MEASURE meter to the receiver power supply. The amount of B+ voltage output from the receiver power supply is then read on the MEASURE meter.
FREQ DRIFT meter (M101)	This is a zero-center reading, dc microammeter that measures the dc component of the output from the receiver discriminator. The meter scale is marked from −50 to +50 microamperes.
OUTPUT ADJ control (R232)	A knob-controlled potentiometer that adjusts the receiver base-band output level signal in 1-db steps. The normal setting of this potentiometer is 15 for band C and 19 for band B. This potentiometer has an OFF position (fully counterclockwise) and 30 steps of 1 db each.
ALARM switch (S104)	A two-position toggle switch used as a reversing switch for the receiver buzzer (see receiver buzzer below).
	In the NOR position, this switch connects the buzzer in parallel across the ALARM lamp (see ALARM lamp below). In this position of the switch, the buzzer will sound whenever the rf signal fails or falls below a reference level set by adjustment of the SQUELCH control (see SQUELCH control below).
	In the REV position, this switch connects the buzzer to the alarm circuit so that it will sound whenever the rf signal is present and above the reference level set by adjustment of the SQUELCH control. When the rf signal fails or drops below the reference level, the ALARM switch usually is operated to the REV position to indicate when the rf signal level is restored.
Receiver buzzer (I 103)	This unit serves as an audible warning to indicate that the rf signal has either fallen below the reference level or has been restored.
ALARM lamp (I 102)	A lamp that lights whenever the rf signal fails or falls below the reference level set by the SQUELCH control (see SQUELCH control below). This lamp has an adjustable dimmer and illuminates a red-colored jewel.
SQUELCH control (R170) (S108)	A knob-controlled ganged potentiometer and switch that adjusts the sensitivity and sets the squelch level of the receiver.
	In the fully clockwise position of this control, the squelch circuit is disconnected through switch S108 and there is no squelching action.
600 OHMS–135 OHMS switch (S107)	A two-position lever switch that changes the output impedance of the receiver and at the same time the input impedance of the transmitter from 600 ohms to 135 ohms, or vice versa. The position of this switch depends upon the impedance of the connected telephone equipment.

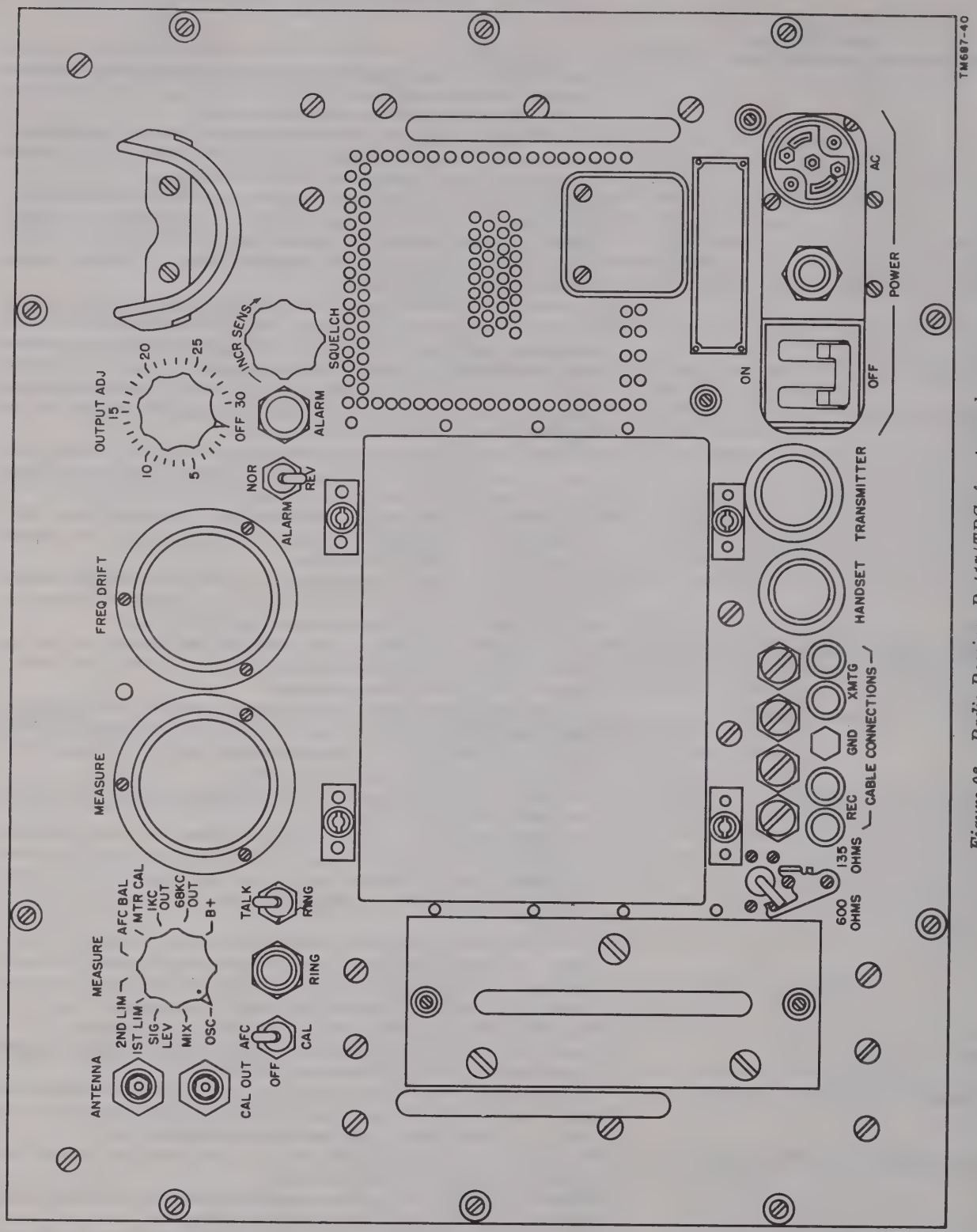

Figure 98. Radio Receiver R-417/TRC, front panel.

b. Receiver Internal Controls (figs. 232, 235, and 239). The following chart lists the internal controls of the radio receiver and indicates what they do.

Control or instrument	Function
AFC DISABLE switch (S102)	A two-position lever switch that is nonlocking in the AFC DISABLE position. This switch is used to ground the input to the afc circuits when adjusting the balance of these circuits (figs. 234 and 235).
AFC BAL control (R204)	A screwdriver-controlled potentiometer that adjusts the balance of the afc circuits. This control is adjusted with the MEASURE switch in the AFC BAL position (see MEASURE switch *a* above) and the AFC DISABLE switch (see AFC DISABLE switch above) in the AFC DISABLE position (fig. 235).
ADJ METER control (R260)	A screwdriver-controlled potentiometer that adjusts the sensitivity of the receiver meter amplifier circuit (fig. 230). This control is adjusted to give a 0-db reading on the receiver MEASURE meter with the receiver MEASURE switch in the MTR CAL position (see receiver MEASURE switch (*a* above).
150V ADJ control (R226)	A screwdriver-controlled potentiometer that adjusts the magnitude of the regulated output of the receiver power supply (fig. 239).

88. Amplifier-Converter AM–913/TRC Controls (fig. 94)

The following chart lists the front-panel controls of the receiver B-band tuner and indicates what they do.

Control or instrument	Function
RF AMP control (L1)	A knob-controlled four-section ganged variable inductor, used to tune the oscillator and rf circuits of the receiver B-band tuner. The RF AMP dial, located above the tuning knob, is connected to this control. The RF AMP dial is marked with the numbers of the rf channels and gives an approximate indication of the position of the tuning control.
AFC control (C19)	A knob-controlled shaft coupled to the afc capacitor and provides manual control of this capacitor. The afc capacitor normally is controlled by the afc motor through a friction clutch. While the receiver afc circuits are operating, the afc capacitor will continuously correct the oscillator frequency to compensate for frequency drift of the incoming rf signal and of the oscillator.
INDEX control	A knob-controlled mechanical control that adjusts the index line of the RF AMP dial. Clockwise rotation of this control moves the index line to the right.

89. Amplifier-Converter AM–914/TRC Controls (fig. 95)

The following chart lists the front-panel controls of the receiver C-band tuner and indicates what they do.

Control or instrument	Function
RF AMP control (L3)	A knob-controlled, four-section, ganged variable inductor that tunes the rf amplifier circuits of the receiver C-band tuner. The RF AMP dial, located above the tuning knob, is connected to this control. The RF AMP dial is marked with the numbers of the rf channels to give an approximate indication of the position of the tuning control.
OSC COARSE control (Z2)	A knob-controlled variable inductance and capacitance network that adjusts the frequency of the local oscillator. The OSC dial, located above this control knob, is geared to this control. The OSC dial is marked with the numbers of the rf channels and gives an approximate indication of the position of the

Control or instrument	Function
	OSC COARSE control for a desired rf channel. This control must be pushed in to disengage the OSC FINE control and associated gears.
OSC FINE control (Z2)	This control is geared to the same circuit as the OSC COARSE control but with a lower gear ratio. Thus the OSC FINE control provides a more accurate adjustment of the local-oscillator frequency than is possible with the OSC COARSE control only.
AFC control (C24)	A knob-controlled shaft, coupled to the afc capacitor that provides manual control of this capacitor. The afc capacitor normally is controlled by the afc motor through a friction clutch. While the receiver afc circuits are operating, this control will continuously correct the oscillator frequency to compensate for frequency drift of the incoming rf signal and of the oscillator.
INDEX control	A knob-controlled mechanical control that adjusts the index line of the OSC dial. Clockwise rotation of this control moves the index line to the right.

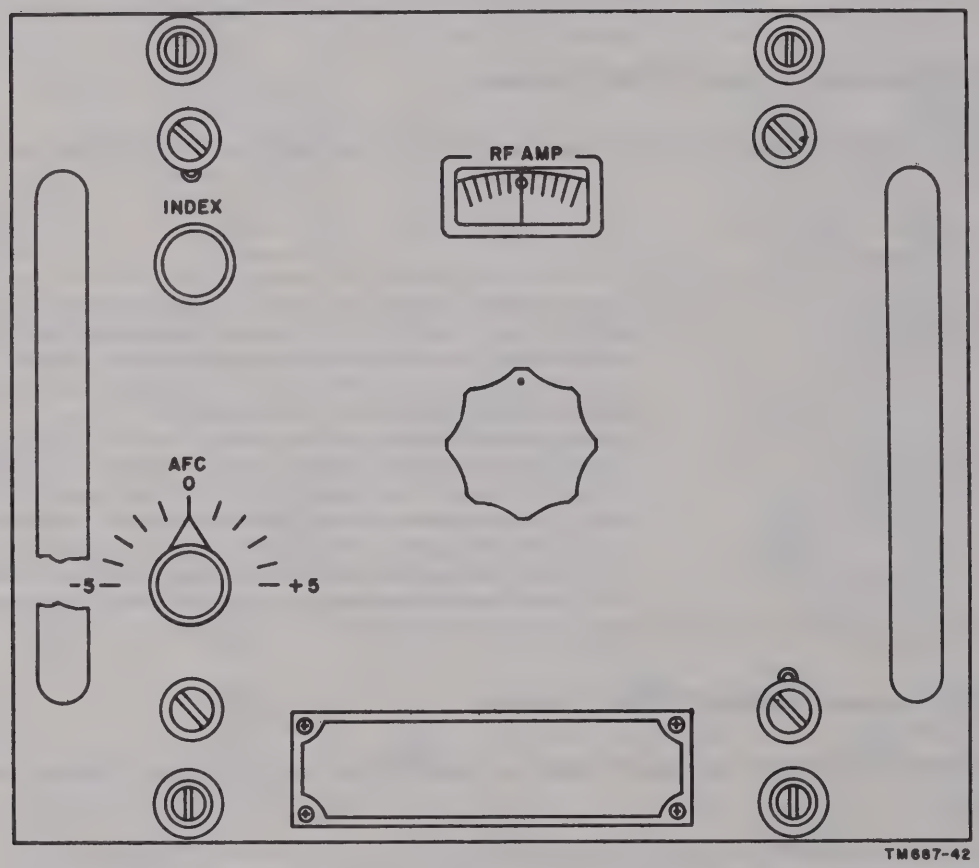

Figure 94. Amplifier-Converter AM-913/TRC, front panel.

90. Band-Pass Filter Controls

Each of the band-pass filters (Band-Pass Filter F-192/U through Band-Pass Filter F–197/U and Band-Pass Filter F–199/U through Band-Pass Filter F–204/U has two tuning knobs on its front panel (fig. 10). These tuning knobs are marked with the rf channels in white numerals and the corresponding frequency in red numerals.

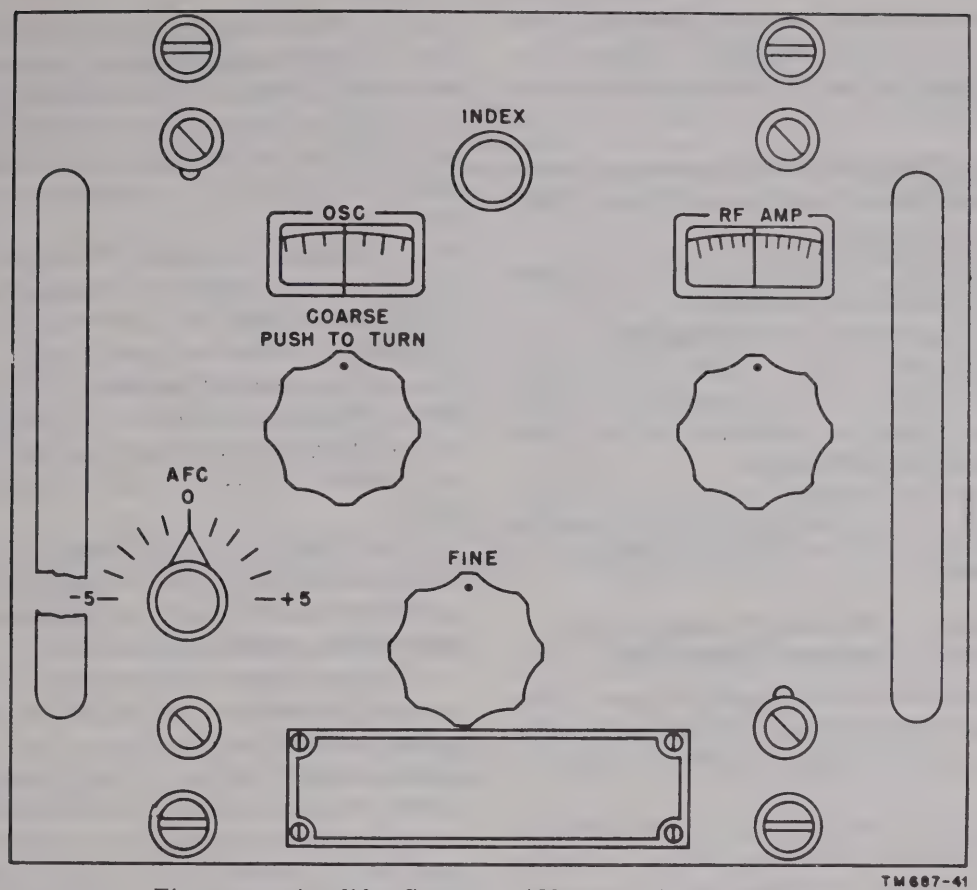

Figure 95. Amplifier-Converter AM–914/TRC, front panel.

Section II. OPERATION UNDER USUAL CONDITIONS

91. Preliminary Starting Procedures

Follow the procedures outlined in *a* through *c* below before performing the starting procedure given in paragraphs 93 through 108.

a. Be sure ac power is off.

Note. If two power sources are to be connected to Switch Box SA–331/U, each of their voltages must be approximately 115 volts or approximately 230 volts.

b. Determine the voltage of the power source and set the source voltage connection link in Interconnecting Box J–532/U to the correct position for this voltage.

Caution: Damage to the equipment will result, or the equipment will be inoperative, unless this link is set to the correct position for the voltage of the power source.

c. Set the controls of the components of the radio set as indicated below:

(1) *On Autotransformer Fixed Power Transformer TF–167/TRC,* set the INCR OUT switch to position 1.

(2) *On Power Supply PP–685/TRC,* set the 115V AC switch to the OFF position, the 750V ADJ switch to position 2, and the 750V DC switch to the OFF position.

(3) *On Radio Transmitter T–302/TRC,* set the INPUT ADJ control to the OFF position.

(4) *On Radio Receiver R–417/TRC,* set the POWER switch to the OFF position.

d. Check to see that all cables are correctly connected (par. 73).

92. General Starting Procedure

Follow the procedures outlined in paragraphs 93 through 116 to operate Radio Set AN/TRC–24. If something appears to be abnormal while following the steps of the starting procedures, turn the 15V AC switch on the power supply to the OFF position; then refer to the equipment

performance checklist (par. 179) and apply the suggested corrective measures. Follow the starting procedures for the transformer, transmitter, and receiver in the order given.

93. Starting Procedure for Autotransformer Fixed Power Transformer TF–167/TRC

a. Turn the power source on.

b. Put the 115V AC switch on Power Supply PP–685/TRC in the ON position.

c. While observing the indication on the power supply AC VOLTS meter, adjust the INCR OUT switch on the transformer to the position that gives an indication of 115 ±5.5 volts on the AC VOLTS meter.

Note. It may be necessary to readjust the INCR OUT switch to get a reading of 115 ±5.5 volts on the AC VOLTS meter *after* the starting procedures have been completed.

94. Summary of Starting Procedure for Radio Transmitter T–302/TRC

The procedures to be followed to operate the radio transmitter are detailed in paragraphs 95 through 98 and are summarized *a* through *n* below.

a. Presetting Controls. The controls of the transmitter require presetting before power is applied. A number of these controls are adjusted or operated during the starting procedure (par. 95).

b. Connections. Certain connections are made to the transmitter during the starting procedure for the purpose of calibration (par. 96).

c. Adjusting Transmitter Afc Discriminator Circuits. It is necessary to adjust certain controls of the transmitter during the starting procedure so that the transmitter afc discriminator circuits will operate correctly (par. 97).

d. Calibration. During the starting procedure various controls of the transmitter need to be calibrated and adjusted for the desired rf channel (par. 98). These controls are calibrated by use of the test equipment built into the transmitter.

e. Afc Operation. A visual check of the operation of the transmitter afc circuits is necessary during the starting procedure (par. 99).

f. l-kc Oscillator. The output of the test l-kc oscillator, which is built into the transmitter, must be adjusted to a reference level (par. 100).

g. Transmitter MEASURE Meter Circuit. It it necessary to adjust the transmitter MEASURE meter circuit to a reference level during the starting procedure (par. 101).

h. Afc Limiter Adjustment. Certain controls of the transmitter require adjustment during the starting procedure so that the transmitter afc limiter circuits will function properly (par. 102).

i. Base-Band Amplifier Input. The level of the input signal to the transmitter base-band amplifier circuits requires adjustment during the starting procedure (par. 103).

j. Driver Stage. During the starting procedure, it is necessary to adjust the plate circuit of the transmitter driver stage (par. 104). The test equipment, which is built into the transmitter, is used to make this adjustment.

k. Transmitter Tuner Adjustment. The controls of the transmitter rf tuner must be adjusted to the desired rf channel during the starting procedure (par. 105).

l. Low-Power Alarm. It is necessary to adjust the transmitter low-power alarm circuits during the starting procedure (par. 106).

m. Transmitter Returning. After a ½ hour warmup period, it is necessary to retune the transmitter and the band-pass filter (par. 108).

n. Transmitter Output Power. The final step in the starting procedure is tuning the transmitter for maximum output power (par. 107).

95. Presetting Transmitter Controls

Set the controls of the transmitter and of the transmitter rf tuner as indicated in the tables in *a* and *b* below.

a. Presetting Transmitter Controls.

Control or switch	Position
INPUT ADJ. control	OFF.
MEASURE switch	RF CHAN TUNE.
AFC switch	OFF.
XTAL SET switch	DECADE CHANS.
PULSED OSC switch	ODD CHANNELS (if the desired rf channel is an odd number). EVEN CHANNELS (if the desired rf channel is an even number).

Control or switch	Position
PULSED OSC TUNE control	For the desired rf channel as indicated on the PULSED OSC TUNE dial.
LOCK control	Fully counterclockwise.
INDEX control	For a centered position of the index.
RF CHANNEL TUNE control	For the desired rf channel coincident with the index line overt he RF CHANNEL dial.
AFC control	0.
DRIVER TUNE control	For the desired rf channel as indicated on the DRIVER TUNE dial. For rf channels in the B-, C-, or D-band use white background portion of the DRIVER TUNE dial. For rf channels in the A-band, use the black background portion of the DRIVER TUNE dial. (Only the B- and C-bands are available for use at the present time.)
DRIVER OUTPUT COUPLING control	1 (as indicated on the DRIVER OUTPUT COUPLING dial).
TEST switch	DRIVER CATH.
ALARM switch	OFF.

b. Presetting Tuner Controls. Set the controls of the transmitter rf tuner to the position given in (1) below if the B-band tuner is used or to the position given in (2) below if the C-band tuner is used.

(1) *Presetting Radio Frequency Amplifier AM–912/TRC controls.*

Control	Position
GRID	For the desired rf channel as indicated on the GRID dial.
PLATE	For the desired rf channel as indicated on the PLATE dial.
AMPLIFIER OUTPUT COUPLING	6.

(2) *Presetting Radio Frequency Amplifier-Multiplier AM–915/TRC controls.*

Control	Position
MULTIPLIER GRID	For the desired rf channel as indicated on the MULTIPLIER GRID dial.
MULTIPLIER PLATE	For the desired rf channel as indicated on the MULTIPLIER PLATE dial.
POWER AMPLIFIER GRID	For the desired rf channel as indicated on the POWER AMPLIFIER GRID dial.
POWER AMPLIFIER PLATE	For the desired rf channel as indicated on the POWER AMPLIFIER PLATE dial.
MULTIPLIER OUTPUT COUPLING	6.
AMPLIFIER OUTPUT COUPLING	6.

96. Transmitter Connections

a. Disconnect both the transmitting and receiving 80-foot rf cables CG–1030/U from the respective transmitter and receiver ANTENNA jacks.

b. Connect 6-inch cable CG–1031/U between the ANTENNA jack and the CAL OUT jack on the receiver.

c. Connect cable CG–718/U between the transmitter ANTENNA jack and Wattmeter ME–82/U.

Note. Be sure the dummy filter is inserted in the transmitter.

97. Adjusting Transmitter Afc Discriminator Circuit

Follow the procedure outlined in *a* through *i* below, in the order given, to adjust the transmitter afc discriminator circuits.

a. Set the 115V AC switch on Power Supply PP–685/TRC to the ON position.

b. Set the 150V DC switch on the power supply to the ON position.

c. Allow at least 10 minutes for the transmitter to warm up before proceeding with the following.

d. If required, readjust the necessary con-

trols to give a reading on the power supply AC VOLTS meter of 115 volts ±5.5 volts (par. 93*c*).

e. Turn the power supply DC TEST switch to the 150V position and adjust the power supply 150V ADJ control for a reading of 150 volts on the power supply DC VOLTS meter.

f. Turn and hold the transmitter XTAL SEL switch in the DISCR CENTER position. Check to see that with the PULSED OSC switch in the ODD CHANNELS position, the FREQ DRIFT meter pointer moves to the right for clockwise rotation of the DISCR CENTER control and to the left for counterclockwise rotation. Also check to see that with the PULSED OSC switch in the EVEN CHANNELS position, the deflection of the FREQ DRIFT meter needle is opposite to that described above for right and left rotation of the DISCR CENTER control.

g. Set the PULSED OSC switch to the desired channel and with the XTAL SEL switch in the DISCR CENTER position, adjust the DISCR CENTER control to obtain a zero reading on the FREQ DRIFT meter.

h. With the XTAL SEL switch in the DISCR CENTER position, check the reading of the MEASURE meter. The MEASURE switch should be in the RF CHAN TUNE position. The indication on the meter should read at least 15 ua; if not, it may be necessary to realine the if amplifier section 348*a* (16)).

i. Release the XTAL SEL switch.

98. Transmitter Calibration

Follow the procedure outlined in *a* through *l* below, in the order given, to set the controls of the transmitter for a desired rf channel.

a. Place the XTAL SEL switch in the DECADE CHANS position.

b. Turn the transmitter MEASURE switch to the RF CHAN TUNE position.

Note. Every tenth rf channel starting with rf channel 1 is known as an *odd decade channel;* every tenth rf channel starting with rf channel 10 is known as an *even decade channel.* Thus, rf channel 120 is an even decade channel and rf channel 121 is an odd decade channel.

c. If the desired rf channel is even numbered and is not a decade channel, adjust the RF CHANNEL TUNE control to the nearest even decade channel (note above and *h* below). If the desired rf channel is odd numbered and is not a decade channel, adjust the RF CHANNEL TUNE control to the nearest odd decade channel. If the desired rf channel is itself a decade channel, adjust the RF CHANNEL TUNE control to that channel.

d. Slowly rotate (rock) the RF CHANNEL TUNE control alternately to the left and right around the decade channel indication until the transmitter MEASURE meter indicates a current maximum and at the same time the transmitter FREQ DRIFT meter indicates zero. Rotate the PULSED OSC TUNE control to obtain a maximum indication on the MEASURE meter.

Caution: When tuning to the high or low channels near the ends of the tuning range, turn the RF CHANNEL TUNE control slowly. In this way, if the stops that prevent excessive rotation of the control are reached, excessive turning will not be applied to a gear driven by the control. In some transmitters, excessive turning may cause this gear to slip slightly around its shaft. This, in turn, may change the calibration of the RF CHANNEL dial slightly.

e. Turn the INDEX control until the index line of the RF CHANNEL dial is directly above the desired decade channel (*c* above).

f. Turn the XTAL SEL switch to the UNIT CHANS position.

g. The desired rf channel can be tuned in, by following the procedure outlined in *h* and *i* below.

h. Slowly rotate the RF CHANNEL TUNE control from the desired decade position (*c* above) in the direction of the desired rf channel. A maximum reading on the transmitter MEASURE meter and a corresponding 0 (null) reading on the transmitter FREQ DRIFT meter will occur for the position of the RF CHANNEL TUNE control corresponding to each alternate rf channel. For example, if the position of the RF CHANNEL TUNE control has been determined for the 120 decade, then, as this control is rotated in a clockwise direction, MEASURE meter maximum indications and simultaneous FREQ DRIFT meter zeros will occur in succession when the RF CHANNEL TUNE control is at the correct position for rf channel 122, then rf channel 124, then 126, and then 128. Similarly, for odd channels, if the position of the RF CHANNEL TUNE control has been determined for the 121 decade, then, as this control is rotated in a

clockwise direction, current maximums and simultaneous zero readings will be read in succession when the RF CHANNEL TUNE control is at the correct position for rf channel 123, then 125, then 127, and then 129. Counterclockwise rotation of the RF CHANNEL TUNE control will give successive MEASURE meter maximums and corresponding FREQ DRIFT meter nulls for alternate rf channels in the decreasing numerical order. For example, as the RF CHANNEL TUNE control is rotated in a counterclockwise direction from the 120 decade position, MEASURE meter maximum readings and simultaneous FREQ DRIFT meter null readings will be read successively for the correct position of rf channel 118, then 116, then 114, and then 112. Therefore, it is possible to tune to rf channel 124 by first tuning to decade channel 130 and tuning *down* to rf channel 124, or by first tuning to decade channel 120 and tuning *up* to channel 124.

i. Adjust the RF CHANNEL TUNE control to the correct position for the desired rf channel, noting the MEASURE meter maximums and FREQ DRIFT meter nulls as outlined in *h* above.

j. Set the index line of the RF CHANNEL dial to coincide with the desired channel.

k. Turn the LOCK control to its maximum clockwise position and rotate PULSED OSC TUNE control to obtain a peak indication on the MEASURE meter.

l. Set the transmitter AFC switch to the ON position.

99. Transmitter Afc Operation Check

Follow the procedures outlined in *a* and *b* below to check the operation of the transmitter afc circuits.

a. Adjust and hold the transmitter AFC control to the +4 position and observe that the FREQ DRIFT meter pointer is in the positive portion of the scale. Release the AFC control and note that it returns to the O position.

b. Hold the AFC control in the —4 position and observe that the FREQ DRIFT meter pointer is in the negative portion of the scale. Release the AFC control and note that it returns to the O position.

100. Adjustment of 1-kc Oscillator

a. Set the transmitter MEASURE switch to the 1 KC ADJ position.

b. Adjust the 1 KC ADJ screwdriver control for a O-db reading on the transmitter MEASURE meter.

101. Transmitter MEASURE Meter Circuit Adjustment

a. Set the transmitter MEASURE switch to the MTR CAL position.

b. Adjust the MTR CAL screwdriver control for a O-db reading on the transmitter MEASURE meter.

102. Transmitter Afc Limiter Adjustment

a. Set the transmitter MEASURE switch to the DISCR RF DRIVE position.

b. Adjust the DISCR RF DRIVE screwdriver control for a O-db reading on the transmitter MEASURE meter.

103. Transmitter Base-Band Amplifier Input Adjustment

Follow the procedure outlined in *a* through *f* below, in the order given, to adjust the input to the base-band amplifier circuits to a reference level. This procedure establishes the required modulation sensitivity for the transmitter.

a. Set the transmitter MEASURE switch to the MOD ADJ position.

b. Adjust the MOD ADJ screwdriver control for a O-db reading on the MEASURE meter.

c. Turn and hold the MTR SENS switch in the nonlocking INCR position.

d. While holding the MTR SENS switch in the INCR position, adjust the MOD TRIM screwdriver control for a maximum reading on the MEASURE meter.

Note. If the meter needle moves beyond full scale during the adjustment of the MOD TRIM control, rotate the MOD ADJ control (*b* above) counterclockwise to bring it back to midscale. Adjust the MOD TRIM control for maximum deflection.

e. Release the MTR SENS switch.

f. Adjust the MOD ADJ control for either a +2-db reading on the MEASURE meter if Radio Frequency Amplifier AM–912/TRC is used in the transmitter (B-band) or for a O-db reading if Radio Frequency Amplifier-Multiplier AM–915/TRC is used (C-band).

104. Transmitter Driver Stage Adjustment

Follow the procedure outlined in *a* through *e* below, in the order given, to tune the plate circuit of the transmitter driver stage.

a. Turn the 750V ADJ switch on the power supply to position 2.

b. Set the transmitter TEST switch to the DRIVER CATH position.

c. Set the 750V DC switch on the power supply to the ON position.

d. Adjust the INCR OUT switch on the autotransformer to the position that produces a reading of 115 ±2 volts on the AC VOLTS meter of the power supply.

e. Slowly adjust the DRIVER TUNE control on the transmitter for a dip (minimum) on the transmitter TEST meter.

105. Transmitter Tuner Adjustment

Follow the procedure outlined in *a* below if Radio Frequency Amplifier AM–912/TRC is used in the transmitter or the procedure outlined in *b* below if Radio Frequency Amplifier-Multiplier AM–915/TRC is used in the transmitter.

a. Tuning Radio Frequency Amplifier AM–912/TRC (Channels B1 Through B250).

Caution: Do not tune the transmitter without connecting Wattmeter ME–82/U or the antenna to the ANTENNA jack.

(1) Connect Wattmeter ME–82/U to the ANTENNA jack. Place the DC TEST switch on the power supply in the 750 position.

(2) Turn the 750V ADJ switch on the power supply to the position that gives a reading of approximately 850 volts on the power supply DC VOLTS meter.

(3) Place the DC TEST switch on the power supply to the 275 position.

(4) Adjust the SCREEN VOLTS ADJ control on the rf tuner front panel for a reading of +275 volts on the power supply DC VOLTS meter.

(5) Turn the power supply 750V ADJ switch to position 1.

(6) Adjust the DRIVER OUTPUT COUPLING control on the transmitter until the DRIVER OUTPUT COUPLING dial is increased by two numbers from the preset position.

(7) Set the transmitter TEST switch to the DRIVER CATH position. Slowly adjust the DRIVER TUNE control on the transmitter for a dip on the transmitter TEST meter. (This dip is very slight.)

(8) Set the transmitter TEST switch to the PWR AMPL GRID position. Slowly rotate the rf tuner GRID control back and forth around the desired rf channel marking until a maximum reading is obtained on the TEST meter.

(9) Repeat procedures given in (6) through (8), above in the order given, until a maximum reading (not greater than 20 microamperes) is obtained on the transmitter TEST meter. If the reading on the meter decreases, adjust the DRIVER OUTPUT COUPLING control in the opposite direction by small amounts. Repeat procedures given in (7) and (8) after each adjustment until a maximum reading (not greater than 20 microamperes) is obtained on the transmitter TEST meter.

(10) Adjust the transmitter rf tuner PLATE control for a maximum reading on Wattmeter ME–82/U.

(11) Adjust the AMPLIFIER OUTPUT COUPLING control for a maximum reading on Wattmeter ME–82/U.

(12) Alternately repeat procedures given in (10) and (11) above, until no further increase is observed on the wattmeter. (The increases obtained on the wattmeter by adjusting the AMPLIFIER OUTPUT COUPLING control will be very slight.)

(13) Adjust the power supply 750V ADJ switch to the position that gives a reading of approximately 850 volts on the power supply DC VOLTS meter.

(14) Place the transmitter TEST switch in the PWR AMPL GRID position.

(15) With the TEST switch in the PWR AMPL GRID position, repeat procedures given in (6) through (8) above to obtain a maximum reading on the TEST meter (not greater than 30 microampere (μa)).

(16) Repeat procedures given in (10) through (12) above.

(17) Set the TEST switch in the PWR AMPL CATH position.

(18) The rf power output as indicated by the wattmeter should be at least 50 watts and normally 75 watts or more. This reading should be obtained with a corresponding indication of approximately 25 μa on the transmitter TEST meter in the PWR AMPL GRID position. The indication on the transmitter TEST meter should not be greater than 27.5 μa. If this reading is greater than 27.5 μa, adjust the rf tuner SCREEN VOLTS ADJ control so that the meter indicates 25 μa.

(19) With the SCREEN VOLTS ADJ control properly adjusted, repeat procedures given in (10) through (12) and (14) through (16) above.

b. Tuning Radio Frequency Amplifier-Multiplier AM–915/TRC (Channels C26 Through C200).

Caution: Do not tune the transmitter without connecting Wattmeter ME–82/U or the antenna to the ANTENNA jack.

(1) Connect Wattmeter ME–82/U to the ANTENNA jack. Place the DC TEST switch on the power supply in the 750 position.

(2) Rotate the 750V ADJ switch on the power supply to the position that gives a reading of approximately 750 volts on the power supply DC VOLTS meter.

(3) Turn the DC TEST switch on the power supply to the 275 position.

(4) Adjust the SCREEN VOLTS ADJ control on the rf tuner front panel until a reading of +200 volts on the power supply DC VOLTS meter is obtained.

(5) Set the 750V ADJ switch on the power supply to position 1.

(6) Adjust the DRIVER OUTPUT COUPLING control until the DRIVER OUTPUT COUPLING dial is increased two numbers from the preset position.

(7) Set the transmitter TEST switch to the DRIVER CATH position and slowly adjust the DRIVER TUNE control until there is a dip on the TEST meter. (This dip is very slight.)

(8) Set the transmitter TEST switch to the MULT GRID position.

(9) Slowly rotate the rf tuner MULTIPLIER GRID control back and forth around the desired rf channel marking until a maximum reading is obtained on the TEST meter.

(10) Repeat procedures given in (6) through (9) above, in that order, until a maximum reading (not greater than 20 ua) is obtained on the TEST meter. If the indication decreases, adjust the DRIVER OUTPUT COUPLING control in the opposite direction by small amounts. Follow directions in (7) through (9) above after each adjustment until a maximum reading (not greater than 20 μa) is obtained on the TEST meter.

(11) Increase the MULTIPLIER OUTPUT COUPLING control two divisions from the preset position.

(12) Set the TEST switch to the MULT CATH position.

(13) Slowly adjust the rf tuner MULTIPLIER PLATE control for a dip on the TEST meter. (This dip is very slight.)

(14) Set the TEST meter to the PWR AMPL GRID position.

(15) Slowly rotate the rf tuner POWER AMPLIFIER GRID control back and forth around the desired rf channel marking until a maximum reading is obtained on the transmitter TEST meter; then adjust the MULTIPLIER PLATE control for a maximum reading on the TEST meter.

(16) Repeat procedures given in (11) through (15) above, in the order given, until a maximum indication is obtained on the TEST meter. If the reading on the TEST meter decreases, adjust the MULTIPLIER OUTPUT COUPLING control in the opposite direction by small amounts. Repeat procedures given in (11) through (15) above after each adjustment until a maximum reading is obtained on the TEST meter.

(17) Adjust the POWER AMPLIFIER PLATE control for a maximum reading on Wattmeter ME–82/U.

(18) Adjust the AMPLIFIER OUTPUT COUPLING control for a maximum

reading on the wattmeter.

(19) Alternately repeat procedures given in (17) and (18) above for a maximum reading on the wattmeter. (Increases obtained on the wattmeter by adjusting the AMPLIFIER OUTPUT COUPLING control will be very slight.)

(20) Repeat procedures given in (2) above.

(21) Repeat procedures given in (10) above for a maximum reading (but not greater than 30 μa) on the TEST meter. Repeat procedures given in (11), (14), (15), and (16) above, in the order given, for maximum reading on the transmitter TEST meter.

(22) Repeat procedures given in (17), (18), and (19) above for maximum reading on the TEST meter.

(23) Set the TEST switch to the PWR AMPL CATH position. The rf output power as indicated by the wattmeter should be at least 50 watts and normally about 75 watts or more. This output power reading should be obtained with a corresponding reading of approximately 22 μa on the TEST meter in the PWR AMPL CATH position. The TEST meter should not exceed 25 μa. If it does, adjust the rf tuner SCREEN VOLTS ADJ control to obtain an indication of at least 22 μa.

(24) With the SCREEN VOLTS ADJ control adjusted, repeat procedures given in (14) through (22) above.

c. Checking Directional Coupler.

(1) Disconnect the wattmeter from the transmitter ANTENNA jack.

(2) Set the TEST switch on the FWD PWR position and note the reading on the TEST meter.

(3) Turn the TEST switch to the REFL PWR position. If the directional coupler is functioning normally, the reading on the TEST meter will not differ by more than 12 μa from the reading obtained by procedures given in (2) above.

(4) Note that this check of the directional coupler is made with the transmitter output mismatched. Under normal operating conditions, the REFL PWR reading is much less than the FWD PWR reading (par. 121*b*).

106. Transmitter Low-power Alarm Adjustment

Follow the procedure outlined in *a* through *k* below, in the order given, to adjust the transmitter low-power alarm circuits.

a. Reconnect the wattmeter to the transmitter ANTENNA jack and note the rf output power as indicated on the wattmeter.

b. Put the TEST switch in the FWD PWR position. Note the indication on the TEST meter.

c. Adjust the DRIVER TUNE control for a reading on the wattmeter that is one-half of that noted in *a* above. The current reading on the TEST meter should now be about two-thirds of that noted in *b* above.

d. Set the ALARM switch to the NOR position.

e. Adjust the THRESHOLD ADJ control until the LOW PWR ALARM indicator just lights and the buzzer just operates.

f. Adjust the DRIVER TUNE control from just below the one-half power point (*c* above) to the full power point (*a* above).

g. Note that both the LOW PWR ALARM lamp and the buzzer do *not* operate at the full power point.

h. Set the transmitter ALARM switch to the REV position.

i. Repeat the step given in *f* above. Note that the buzzer does *not* sound below the one-half power output point and *does* sound when full output power is restored.

j. Set the transmitter ALARM switch to the NOR position.

k. Readjust the DRIVER TUNE control for an indication on the wattmeter indentical with that obtained by procedures given in subparagraph *a* above.

107. Adjustment of Transmitter Output Power to Antenna

Follow either the procedure outlined in *a* below if the dummy filter is to be used in the transmitter, or the procedure outlined in *b* below if a band-pass filter is to be used in the transmitter. The procedures outlined in paragraphs 104 and 105 must be completed before attempting the following procedure.

a. Tuning Transmitter When Using Dummy Filter.

Caution: Do not tune the transmitter without Wattmeter ME–82/U or the antenna connected.

(1) Set the 750V DC switch to the OFF position.
(2) Disconnect cable CG–718/U from the transmitter ANTENNA jack and connect the 80-foot transmission line to the jack.
(3) Turn the TEST switch to the FWD PWR position.
(4) Set the 750V DC switch to the ON position.
(5) Adjust the POWER AMPLIFIER PLATE control for maximum power output as indicated by a maximum value on the TEST meter.
(6) Adjust the AMPLIFIER OUTPUT COUPLING control for maximum power output as indicated by a maximum value on the TEST meter.
(7) Repeat procedures given in (5) and (6) above, in the order given, until a maximum reading is obtained on the TEST meter. If the indication on the TEST meter decreases, adjust the AMPLIFIER OUTPUT COUPLING control in the opposite direction by small amounts. Repeat the procedures given in (5) above after each adjustment until a maximum reading is obtained on the TEST meter. Note the TEST meter reading.
(8) Operate the TEST switch to the FWD PWR position.
(9) Readjust the DRIVER TUNE control for a reading approximately 70 percent of that noted in (7) above.
(10) Adjust the THRESHOLD ADJ control to a position at which the LOW PWR ALARM lamp is just lighted.
(11) Set the ALARM switch in the NOR position.
(12) Adjust the THRESHOLD ADJ control until the LOW PWR ALARM indicator lights and the buzzer operates.
(13) Set the ALARM switch to the REV position.
(14) Readjust the DRIVER TUNE control for a maximum reading on the TEST meter as outlined in (7) above.
(15) Silence the buzzer and extinguish the LOW PWR ALARM indicator lamp by setting the ALARM switch to the NOR position.

b. Tuning Transmitter When Using a Band-Pass Filter.

(1) Perform steps given in *a*(1) through (6) above, with the dummy filter inserted in the transmitter.
(2) Insert the correct band-pass filter into the transmitter for the rf channel assigned (par. 64*e*).
(3) Turn the TEST switch to the FWD PWR position.
(4) Adjust the tuning knobs on the band-pass filter for a maximum indication on the TEST meter.

Note. The position of the band-pass filter tuning knobs for a maximum reading on the TEST meter should be very close to the filter dial markings for the desired rf channel.

(5) Perform steps given in *a* (6) through (11) above.

108. Transmitter Retuning

Follow the procedure outlined below, in the order given, to retune the transmitter after a ½-hour warmup period.

a. Repeat the procedures outlined in paragraphs 95, 96, 97, 98, 100, 105, and 107.

b. To prevent accidental detuning, lock the RF CHANNEL TUNE control by adjusting the transmitter LOCK control to its maximum clockwise position.

109. Summary of Starting Procedure for Radio Receiver R–417/TRC

The procedures required to place the receiver into operation are detailed in paragraphs 110 through 114 and are summarized in *a* through *e* below.

a. Presetting Controls. The controls of the receiver require presetting before power is applied. Certain controls are adjusted or operated during the starting procedure (par. 110).

b. Connections. Certain connections are made to the receiver to calibrate it during the starting procedure (par. 111).

c. Adjusting Balance of Afc Circuits. During the starting procedure, it is necessary to

adjust the balance of the receiver afc circuits and to adjust the gain of the meter amplifier circuit (par. 112).

d. Calibration and Squelch Adjustment. During the starting procedure, it is necessary to adjust the receiver controls and adjust the squelch level (par. 113*c*).

e. Tuning. After the controls have been adjusted and the squelch adjusted, it is necessary to tune the receiver for maximum sensitivity (par 114).

110. Presetting Receiver Controls

Set the controls of the receiver and the receiver rf tuner used as shown in the charts in *a* and *b* below.

a. Presetting Receiver Controls.

Control or switch	Position
POWER switch	OFF.
AFC-OFF-CAL switch	OFF.
MEASURE switch	B+.
SQUELCH control	Fully clockwise.
ALARM switch	NOR.
OUTPUT ADJ control	19 (for operation in the B-band). 15 (for operation in the C-band).

b. Presetting Tuner Controls. Set the controls of the receiver rf tuner to the position given in (1) below if the B-band tuner is used or to the position given in (2) below if the C-band tuner is used.

(1) *Presetting Amplifier-Converter AM–913/TRC controls.*

Control	Position
RF AMP control	To the red calibration mark nearest the desired frequency channel as indicated on the RF AMP dial.
INDEX control	For a centered position of the index line.
AFC control	0.

(2) *Presetting Amplifier-Converter AM–914/TRC controls.*

Control	Position
AFC control	0.
OSC COARSE control.	To the red calibration mark nearest the desired frequency channel as indicated on the OSC dial.
INDEX control	For a centered position of the index line.
RF AMP control	Same as the OSC dial.

111. Receiver Connections

a. Disconnect the receiving antenna from the receiver ANTENNA jack if this has not already been done (par. 96).

b. Connect cable CG–1031/U between the ANTENNA jack and the CAL OUT jack on the receiver if this has not already been done (par. 96).

Note. Be sure the dummy filter is inserted in the receiver.

112. Adjusting Receiver Afc and Meter Amplifier Circuits

a. Set the receiver POWER switch to the ON position.

Note. Allow the receiver to warm up for at least 10 minutes before performing the following procedures.

b. Turn the receiver MEASURE switch to the B+ position.

c. Loosen the 10 cam-lock fasteners on the front panel of the receiver and, holding the receiver by the two handles on either side of the front panel, slide it half-way out of its carrying case.

Caution: If power is applied to the receiver while it is outside the carrying case, there is danger of electrical shock. Be extremely careful when working with the receiver while it is outside the carrying case.

d. Adjust screwdriver-controlled potentiometer R226 (150V ADJ), on top of the receiver power-supply assembly (fig. 239), for a reading of 30 μa (which corresponds to +150 volts) on the receiver MEASURE meter.

e. Set the receiver MEASURE meter to the AFC BAL position.

f. Set and hold the internal AFC DISABLE switch S102 (fig. 235) to the AFC DISABLE position.

g. While holding the AFC DISABLE switch, adjust internal AFC BAL control R204, at the top of the limiter-discriminator-afc assembly (fig. 235), until a minimum reading is obtained on the receiver MEASURE meter.

h. Release the AFC DISABLE switch.

i. Rotate the receiver MEASURE switch to the MTR CAL position.

j. Set the transmitter MEASURE switch to the lKC ADJ position and, if necessary, adjust the lKC ADJ control for a O-db reading on the transmitter MEASURE meter. The receiver MEASURE meter should read O db ±.5 db. If the receiver MEASURE meter does not read

0 db ±.5 db, adjust the internal ADJ METER screwdriver control R260 at the top of the receiver base-band amplifier plug-in assembly (fig. 232) until there is a 0-db reading on the receiver MEASURE meter.

k. Slide the receiver chassis back into its carrying case.

l. Fasten the 10 cam-lock fasteners on the front panel of the receiver.

113. Calibration and Squelch Adjustment of Receiver

Tuning the receiver under normal operating conditions is accomplished by tuning to the calibration frequency supplied by the internal calibrator (*a* below) and then to the desired frequency received from the distant transmitter (par. 114). If the internal calibrator is inoperative or if weak signal reception is anticipated, tune the receiver directly to the desired frequency by tuning the local transmitter temporarily to this frequency and coupling energy to the local receiver (*b* below). Tuning to the local transmitter frequency is more difficult and should be used only under the unusual conditions mentioned above.

a. Calibration. Follow the procedure outlined below to calibrate the receiver tuner. Perform the procedure outlined in paragraph 112 before performing the procedure outlined in (1) through (7) below.

(1) Set the receiver POWER switch in the ON position.

(2) Rotate the receiver MEASURE switch to the 2d LIM position.

(3) Adjust the tuner INDEX control until the index line is in the center of the dial.

(4) Place the tuner AFC control in the 0 position.

(5) When using the B-band tuner (Amplifier-Converter AM–913/TRC), follow the procedure outlined below. When using the C-band tuner, refer to (6) below.

(*a*) Adjust the tuner RF AMP control until the red calibration mark nearest the desired rf channel marking coincides with the index line.

(*b*) Turn the SQUELCH control counterclockwise to obtain a reading of 5 μa on the receiver MEASURE meter.

(*c*) Operate the ALARM switch to the REV position to silence the buzzer.

(*d*) Set and hold the AFC-OFF-CAL switch in the CAL position.

(*e*) Rock the RF AMP control around the red calibration marking until a maximum reading on the receiver MEASURE meter and a 0 indication on the FREQ DRIFT meter are obtained.

(*f*) Adjust the INDEX control until the index line coincides with the desired red calibration marking and set the ALARM switch to the NOR position.

(*g*) Release the AFC-OFF-CAL switch.

(*h*) Adjust the RF AMP control until the desired rf channel marking coincides with the index line.

(6) When using the C-band tuner (Amplifier-Converter AM–914/TRC), follow the procedure outlined below.

(*a*) Adjust the OSC COARSE and OSC FINE controls until the red calibration marking nearest the desired rf channel marking coincides with the index line.

(*b*) Adjust the RF AMP control until an rf channel marking that corresponds approximately to the frequency of the desired red calibration marking ((*a*) above) on the OSC dial coincides with the index line on the RF AMP dial.

(*c*) Adjust the SQUELCH control to obtain a reading of 5 μa on the receiver MEASURE meter.

(*d*) Operate the ALARM switch to the REV position to silence the buzzer.

(*e*) Adjust the RF AMP control for a maximum reading on the MEASURE meter.

(*f*) Adjust the SQUELCH control to maintain the MEASURE meter reading below 30 μa.

(*g*) Set and hold the AFC-OFF-CAL switch in the CAL position.

(*h*) Adjust the OSC FINE control for a reading of 0 on the receiver FREQ DRIFT meter and a maxi-

mum reading on the receiver MEASURE meter.

Note. To avoid dial backlash error, it is necessary to approach the final setting of this control from the same direction in both the step in (*h*) above and the step in (*k*) below. Therefore, note the direction in which the control is turned for the final setting in this step.

(*i*) Adjust the INDEX control until the index line coincides with the desired red calibration marking.

(*j*) Release the AFC-OFF-CAL switch.

(*k*) Adjust the OSC FINE control until the desired rf channel marking coincides with the index line over the OSC dial.

Note. To avoid dial backlash error, approach the final setting in the step in (*k*) above from the same direction as for the final setting in (*h*) above.

(*l*) Adjust the RF AMP control until the desired rf channel marking coincides with the index line over the RF AMP dial.

(7) Disconnect cable CG–1031/U from the receiver ANTENNA and CAL OUT jacks.

b. Tuning Receiver to Local Transmitter Frequency.

(1) Tune the local transmitter to the frequency assigned for the local receiver. Use the procedures outlined in paragraphs 98, 104, and 105.

(2) Insert a short piece of unshielded wire (about 6 in. long) into the ANTENNA jack of the receiver.

(3) Operate the AFC-OFF-CAL switch to the OFF position.

(4) Operate the receiver POWER switch to the ON position.

(5) Operate the receiver MEASURE switch to the SIG LEV position.

(6) Adjust the tuner AFC control to the O position.

(7) Adjust the tuner INDEX control until the index line is in the center of the dial.

(8) When using the B-band tuner (Amplifier-Converter AM–913/TRC), follow the procedure outlined below. When using the C-band tuner, refer to (9) below.

(*a*) Adjust the RF AMP control so that the desired rf channel marking moves back and forth about the index line until a maximum indication on the receiver MEASURE meter and a O indication on the FREQ DRIFT meter are obtained.

(*b*) Adjust the INDEX control until the index line is coincident with the desired rf channel marking.

(9) When using the C-band tuner (Amplifier-Converter AM–914/TRC), follow the procedure in (*a*) through (*d*) below.

(*a*) Adjust the OSC COARSE and RF AMP controls to the desired rf channel.

(*b*) Adjust the OSC FINE control for an indication of O on the receiver FREQ DRIFT meter and a maximum indication on the receiver MEASURE meter. If these indications are obtained at different settings of the OSC FINE control, use the FREQ DRIFT meter indication for the final setting of the control.

(*c*) Adjust the INDEX control until the index line is coincident with the desired rf channel marking.

(*d*) Adjust the RF AMP control for a maximum indication on the receiver MEASURE meter.

(10) Remove the dummy filter from the receiver and insert the correct band-pass filter for the rf channel assigned (par. 64*e*).

(11) Adjust the band-pass filter controls for a maximum indication on the receiver MEASURE meter.

(12) Disconnect the short piece of wire from the receiver ANTENNA jack and retune the transmitter to the assigned transmitter rf channel.

c. Adjusting SQUELCH Control.

(1) Connect the wattmeter to the receiver ANTENNA jack.

(2) Slowly rotate the SQUELCH control in a counterclockwise direction to the first position at which the buzzer sounds and the ALARM lamp is lighted. This is the final setting of the SQUELCH control.

(3) Set the receiver ALARM switch to the REV position to silence the buzzer.
(4) Set the AFC-OFF-CAL switch to the AFC position.
(5) Connect the 80-foot rf cable from the receiving antenna to the receiver ANTENNA jack.
(6) If the buzzer sounds and no indication is obtained on the MEASURE meter in the SIG LEV position, adjust the SQUELCH control until the buzzer is silenced.

114. Tuning Receiver

a. After completing the procedure outlined in paragraph 113*c*, the presence of the carrier signal will be indicated by the sound of the buzzer and extinguishment of the ALARM lamp.

Note. To silence the buzzer, set the receiver ALARM switch to the NOR position.

b. If the carrier signal is not present, check to see that the rf tuner has been adjusted to the correct rf channel (par. 113).

c. After approximately 1 hour, repeat the procedures outlined in paragraphs 109 through 113.

d. While waiting for an indication of the carrier signal, perform the procedures outlined in paragraphs 109 through 113.

e. Do not continue with the tuning procedure until the carrier signal is received.

f. After the carrier signal has been received (*a* above), place the receiver ALARM switch in the NOR position. Inform the attendant at the distant transmitter, using the order wire (par. 115), that the carrier signal is being received.

g. Adjust either the rf tuner RF AMP control (if the B-band tuner is used) or the OSC FINE control (if the C-band tuner is used) for a O indication on the receiver AFC knob.

h. Turn the receiver MEASURE switch to the SIG LEV position.

i. If the C-band tuner is used, adjust the RF AMP tuning control for a maximum indication on the receiver MEASURE meter.

j. Remove the dummy filter if this has not already been done and insert the correct band-pass filter into the receiver for the rf channel assigned (par. 64*e*).

k. Adjust the controls of the band-pass filter for a maximum indication on the receiver MEASURE meter. The indication now on the receiver MEASURE meter is an indication of the carrier signal level.

l. Remove the handset from the cradle and contact the transmitting station. Inform the attendant at the transmitter of readiness to orient the antenna.

m. Make final adjustment of the antenna assembly before orientation as outlined in paragraph 116.

n. Place the 600 OHMS-135 OHMS switch in the correct position. The correct position for the 600 OHMS-135 OHMS switch is determined as follows:

(1) If the radio set is used with Telephone Terminal AN/TCC–7 and associated equipment, place the 600 OHMS-135 OHMS switch in the 135 OHMS position.
(2) If the radio set is used with Telephone Terminal AN/TCC–3 and associated equipment, place the 600 OHMS-135 OHMS switches on the radio-terminal sets in the 600 OHMS position. At all radio-relay stations in the radio system, place the 600 OHMS-135 OHMS switches in the 135 OHMS position.

o. After completing the procedure outlined in *a* through *n* above, contact and inform the control office, designated terminal A, of this completion.

p. During the first hour after turning the receiver on and daily thereafter, a visual check of the position of the receiver AFC control should be made. If the receiver AFC control is off O by more than ±2 divisions, adjust the OSC FINE control if the C-band tuner is used or the RF AMP control if the B-band tuner is used for a O position of the receiver AFC control. Also check the tuning of the band-pass filters (*k* above).

115. Use of Order Wire

a. General. The order wire is used primarily for direct communication between attendants at the stations of the radio and telephone system. Handset H–90/U, which is connected to the HANDSET jack on the receiver, is used for communications over the order wire. The procedure for communicating with attendants at distant stations in the system is outlined in *b* below.

b. Procedure for Use of Order Wire. The procedure for initiating a call to another radio set or to telephone equipment in the system by use of the order-wire is outlined in (1) and (2) below. The procedure for answering a call from another station is outlined in (3) below.

(1) With the TALK-RING switch in the TALK position, listen with the handset to determine whether or not the circuit is idle. If the circuit is in use, wait until it becomes idle before proceeding.

(2) To call in other stations, hold the TALK-RING switch for at least 2 seconds in the RING position to obtain a ringing signal at all other stations.

Note. When the RING-TALK switch is held in the RING position, ringing signals are received simultaneously at all intervening stations (radio and telephone), as well as at both distant telephone terminals. It is possible to assign code calls to each of these stations so that any particular attendant may be called at will.

(3) When a ringing signal intended for the local station is heard, pick up the handset, press the press-to-talk switch, and indicate readiness to talk. Release the press-to-talk switch and listen.

116. Antenna Alinement (Orientation)

Follow the procedure outlined below to determine the maximum possible signal strength is being obtained for the path chosen.

a. Perform the procedures outlined in paragraphs 91 through 115 if they have not already been done.

b. Note the setting of the SQUELCH control and then turn the SQUELCH control in a counterclockwise direction for a 10-μa indication on the receiver MEASURE meter. This setting of the SQUELCH control makes the receiver MEASURE meter very sensitive to changes in input signal level.

c. Loosen the mast-base locks. Using the antenna gin pole, rotate the antenna through an arc of $\pm 15°$ and note the reading on the receiver MEASURE meter. Rotate the antenna to the position where the maximum reading is obtained on the receiver MEASURE meter and secure the reflector guy wires (par. 70) to the rings attached to the top holes of the hinged guy attachments. Secure each reflector guy to a separate hinged guy attachment. Tighten the mast-base locks.

d. Use the order wire to contact the attendant at the station at the other end of the jump (par. 115). Request the operator at the other end of the jump to rotate the distant transmitting antenna through an arc of $\pm 15°$, at the same time noting the reading on the receiver MEASURE meter at the local station. Instruct the distant operator to rotate the transmitting antenna to a position where a maximum reading is obtained on the local receiver MEASURE meter. Notify the operator at the distant antenna when the point of maximum indication is obtained on the MEASURE meter. Inform the distant operator to set the reflector guy wires of his antenna for the position of maximum gain.

e. Turn the SQUELCH control for maximum receiver sensitivity (fully clockwise) and note the reading of the MEASURE meter. If this reading exceeds 40 μa the rf input to the receiver must be reduced to prevent possible cross talk that might occur due to rf overloading of the receiver. The rf input may be reduced to make the meter read less than 40 μa by operating the distant transmitter on low power (the 750V ADJ switch of transmitter power supply set to position 1), lowering the antenna height, or changing the alignment of the receiver antenna slightly. After reducing the rf input to the receiver, return the SQUELCH control to its normal position (par. 113*c*).

117. System Lineup

a. General.

(1) It is necessary to line up a system by setting transmission levels at all points in the system where an adjustment is possible to insure that the overall system will operate without *singing* and without excessive noise in each traffic channel. This lineup is performed for the radio system after completion of the starting procedures (par. 109) and is called the radio system lineup (par. 118). A similar lineup for both the radio system and the telephone system is performed on a daily basis and is called the overall system lineup (par. 119).

(2) The lineup procedures provide a means for setting of the transmission and reception level at all points where levels in the radio system may be measured by using the test facilities built into Radio Set AN/TRC–24.

b. Control of Lineup. All lineups are supervised by the control office, designated (either telephone or radio) terminal A. In the radio system lineup, one radio terminal will be designated as the control office (radio terminal A). The other radio terminal is designated as radio terminal B. In the overall system lineup, a carrier telephone terminal will be the control office. During lineup, the intermediate stations (radio or telephone) will report all readings to the control office.

Caution: Permission to make any lineup adjustments must be obtained from the control office. The control office will not grant permission to line up if telephoto, facsimile, or other signals that might be affected by level changes are being transmitted over the system. Adjustments will be allowed during the transmission of telegraph signals only if the adjustments are made in steps of less than 2 db.

118. Radio-System Lineup

The radio-system lineup is given in *a* through *d* below. This lineup is performed only after the starting procedure has been performed for each radio set in the radio system. The radio system lineup is performed to properly set the gain controls of the radio sets so that the radio system will be ready for insertion in a carrier telephone system. If the radio system is not connected to the telephone system, place the 600 OHMS-135 OHMS switches of the terminal radio sets in the 135 OHMS position, connect the 130-ohm resistor (fig. 32) across the REC binding posts of the terminal radio sets, and proceed with the radio-system lineup. If connections and communications to the telephone system have been made, inform the control telephone terminal that the radio-system lineup will be performed prior to the overall system lineup, disconnect the cable stubs from both terminal radio sets, place the 600 OHMS-135 OHMS switches of the terminal radio sets in the 135 OHMS position, connect a 130-ohm resistor across the REC binding posts of the terminal radio sets, and proceed with the radio-system lineup.

a. General Lineup Procedure. One radio terminal in the system will be designated as the control radio terminal A. The other radio terminal in the system is designated as a radio terminal B. The lineup procedure will first be accomplished in the A–8 direction and then in the B–A direction. In performing the lineup, the controls of the radio terminal A transmitter will be adjusted first (*b* below). When the controls of the radio terminal A transmitter have been adjusted for lineup, the control radio-terminal attendant will inform the attendant at the next receiver in the A–B direction to adjust his receiver control (*d* below). When the receiver control of this radio set has been adjusted, this adjustment will be reported to radio terminal A. Radio terminal A will then request the attendant at the next transmitter in the A–B direction to adjust his control (*c* below). Each successive receiver and transmitter in the A–B direction will line up in succession until the receiver at terminal B is lined up. After all the receivers and transmitters in the A–B direction have been lined up, radio terminal B will assume temporary control; then the procedure will be performed as outlined in *b* below in the B–A direction. When the lineup in the B–A direction has been completed, noise measurements will be made (*e* below).

b. Procedure To Be Followed at Control Radio Terminal.

(1) After all stations have reported readiness to line up, notify all attendants that the lineup will begin.

(2) Set the transmitter MEASURE switch to the MOD ADJ position.

(3) Adjust the MOD ADJ control for a O-db reading on the transmitter MEASURE meter when the C-band tuner is used or for a +2=db reading when the B-band tuner is used.

(4) Operate the transmitter MEASURE switch to the MOD 68KC IN position. This removes the l-kc transmission from the system and permits voice communications over the order wire. Inform the next receiver in the A–B direction in the system to proceed with lineup adjustments. Return the MEASURE switch to the MOD ADJ position.

(5) When the next receiver in the A–B direction reports completion of lineup

adjustments, place the transmitter MEASURE switch in the MOD 68KC IN position.

(6) Inform the attendant at the next transmitter in the A–B direction to proceed with his lineup adjustment.

(7) After the next transmitter in the A–B direction reports completion of lineup adjustments, notify the next receiver in the A–B direction to proceed with lineup adjustments.

(8) As each successive receiver or transmitter reports completion of lineup adjustments, notify the next station along the line to proceed with lineup adjustments.

c. Procedure To Be Followed at Radio Transmitter. When told by the control radio transmitter operator to proceed with lineup adjustments, follow the procedure outlined in (1) through (5) below.

(1) Turn the transmitter MEASURE switch to the MOD ADJ position.

(2) Adjust the MOD ADJ control for a O-db indication in the transmitter MEASURE meter if the C-band tuner is used, or for a +2-db indication if the B-band tuner is used.

(3) Operate the transmitter MEASURE switch to the MOD 68KC IN position. Inform the control terminal of completion of lineup adjustments.

(4) After the control terminal informs the next receiver to proceed with the lineup, return the transmitter MEASURE switch to the MOD ADJ position.

(5) When the next receiver reports completion of the lineup, return the transmitter MEASURE switch to the MOD 68KC IN position.

d. Procedure To Be Followed at Radio Receiver. When told by the control radio transmitter operator to proceed with lineup adjustments, follow the procedure outlined in (1) through (3) below.

(1) Place the receiver MEASURE switch in the 1KC OUT position.

(2) Turn the receiver OUTPUT ADJ control to the position that gives a O-db indication on the receiver MEASURE meter.

(3) Notify the control terminal of completion of lineup adjustments.

e. Noise Measurements. After performing the radio-system lineup as outlined in *a* through *d* above, follow the procedure outlined below to make noise measurements. Noise measurements are made to determine that the noise level over each jump in the radio system is not excessive. If the noise level is found to be excessive, refer to paragraph 129.

(1) After radio-system lineup adjustments have been completed at the radio receiver of control radio terminal A, the attendant at control radio terminal A will request the attendants at each station in the radio system to make noise measurements.

(2) When requested to make noise measurements, the attendant at each radio set in the radio system will remove the cable-stub connections to the radio receiver and set the receiver 600 OHMS-135 OHMS switch to the 135 OHMS position if this has not already been done. Communication over the order wire is then possible only over each jump in the radio system. Remove the 130-ohm resistor from the REC terminals of the terminal radio sets.

(3) Connect one end of the .1-microfarad (μf) capacitor (stored in running spares drawer (fig. 32)) to one of the REC binding posts.

(4) Connect the 130-ohm resistor (stored in running spares drawer) between the free end of the .1-μf capacitor ((3) above) and the GND binding post of the receiver.

(5) Connect Voltmeter ME–30A/U (or Electronic Multimeter ME–6/U) with leads not exceeding 3 feet across the 130-ohm resistor. The reading on the ME–30A/U should not exceed the value given in the chart below for the number of jumps in the radio system and the number of traffic channels in the telephone system. If the value given in the chart below is exceeded by the reading on the meter, refer to paragraph 129 for the procedure to be followed.

Number of jumps in radio system	Maximum allowable meter indication (volts)	
	4 channels (AN/TCC-3)	12 channels (AN/TCC-7)
1	.079	.025
2	.056	.0180
3	.045	.0142
4	.040	.0124
5	.035	.0112
6	.031	.0100
7	.028	.0089
8	.028	.0089

(6) Note the reading given in (5) above; remove the resistor and capacitor from the REC and GND binding posts and reconnect the cable stub to the receiver (par. 74). Place the 600 OHMS-135 OHMS switch in the correct position (par. 114*n*). Store the resistor and capacitor in the running spares drawer.

(7) When order-wire communication has been established over the radio system, report the reading shown in (5) above to the control radio terminal.

(8) Connect the radio system to the telephone system.

119. Overall System Lineup

The overall system lineup for the radio system is given in *a* through *c* below. This lineup is performed as part of a carrier telephone system lineup.

a. General Lineup Procedure. The overall system lineup is performed for both the carrier telephone system and the radio system. This lineup is controlled by the telephone terminal designated as the control office. The radio sets are lined up in succession when request is made by the control office. The lineup procedures are first made successively in the A–B direction and then in the B-A direction. The procedure to be followed is the same at both radio-terminal and radio-relay stations. Follow the procedure outlined in *b* below if the radio system is used with Telephone Terminal AN/TCC–3 telephone and associated equipment. When the radio system is used with an AN/TCC–3 telephone system, perform the procedure outlined in *b* below *only* after the attendants at the telephone equipments that connect directly to the radio system have placed the AMP OUT switches in these telephone equipments to the +10-db position. Follow the procedure outlined in *c* below if the radio system is used with Telephone Terminal AN/TCC–7 and associated equipment.

b. Lineup of Radio Set Used With AN/TCC–3 Equipment. When requested by the control telephone terminal to proceed with lineup adjustments, follow the procedure outlined below. When performing lineup adjustments at radio sets used with AN/TCC–3 equipment, a 1-kc test signal is transmitted from the telephone equipment over the system.

(1) If the receiver is being aligned, set the receiver MEASURE switch to the 1KC OUT position and adjust the receiver OUTPUT ADJ control to the position that gives a 0-db reading on the receiver MEASURE meter.

(2) If the transmitter is being lined up, operate the transmitter MEASURE switch to the MOD 1KC IN position and adjust the transmitter INPUT ADJ control to a position that gives either a 0-db reading on the transmitter MEASURE meter when the C-band tuner is used or a +2-db indication when the B-band tuner is used.

(3) Inform the control telephone terminal of completion of lineup adjustments.

c. Lineup of Radio Set Used With AN/TCC–7 Equipment. When requested by the control telephone terminal to proceed with lineup adjustments, follow the procedure outlined below. When performing lineup adjustments at radio sets used with AN/TCC–7 telephone equipment, a 68-kc pilot signal is transmitted from the telephone equipment over the system.

(1) If the receiver is being aligned, turn the receiver MEASURE switch to the 68KC OUT position and adjust the receiver OUTPUT ADJ control to the position that gives a 0-db reading on the receiver MEASURE meter.

(2) If the transmitter is being lined up, set the transmitter MEASURE switch to the MOD 68KC IN position and adjust the transmitter INPUT ADJ to a position that gives either a 0-db reading on the transmitter MEASURE meter when the C-band tuner is used or a 2-db reading when the B-band tuner is used.

381345 O—56——10

(3) Inform the control telephone terminal of completion of lineup adjustments.

120. Monitoring Procedure

a. General. Radio Set AN/TRC–24 is monitored continuously to check normal operation of the radio system. When the radio system is used with an AN/TCC–3 telephone system, use the monitoring procedure given in *b* below. When the radio system is used with an AN/TCC–7 telephone system, use the monitoring procedure given in *c* below.

b. Monitoring Radio Set Used With AN/TCC–3 Telephone System.

(1) Check to see that the transmitter TEST switch is in the normal operating position FWD PWR.

(2) The normal operating reading on the TEST meter is 30 μa or greater. A decrease in the normal reading signifies a decrease in the output power of the transmitter.

(3) Check to see that the transmitter and receiver FREQ DRIFT meters read 0. A reading other than 0 means improper afc operation.

(4) Check to see that the power supply DC TEST switch is in the normal operating position, 750 LOWER SCALE.

(5) The normal operating reading on the power supply DC VOLTS meter is approximately +750 volts when the C-band tuner is used in the transmitter and approximately +850 volts when the B-band tuner is used in the transmitter.

(6) Periodically, place the transmitter and receiver ALARM switches in the REV positions and note the sounding of the buzzers. Return the transmitter and receiver ALARM switches to the NOR position to silence the buzzers.

c. Monitoring Radio Set Used With AN/TCC–7 Telephone System.

(1) Check to see that the transmitter MEASURE switch is in the normal operating position, 68KC IN.

(2) Check to see that the receiver MEASURE switch is in the normal operating position, 68KC OUT.

(3) The normal operating reading on both the receiver and transmitter MEASURE meters is 0 db. A reading other than 0 db indicates the need for lineup adjustments (par. 119).

(4) Perform procedures given in *b* (1) through (6) above.

121. Operating Checks

a. General. Operating checks are performed on Radio Set AN/TRC–24 at periodic intervals. The operating checks normally are performed while the radio set is operating; these checks will not interrupt the normal use of the radio set. The chart in *b* below lists the operating checks to be performed on the radio transmitter and power supply. The chart in *c* below lists the operating checks to be performed on the radio receiver. In following the charts in *b* and *c* below, turn the indicated control to the position shown and check for a normal reading on the indicated meter. The significance of the normal readings is given in the charts shown in *b* and *c* below, which will be of aid in locating trouble.

b. Operating Checks for Radio Transmitter.

Meter	Control	Position	Normal indication on meter	Significance of normal indication
MEASURE meter of transmitter.	MEASURE switch.	RF CHAN TUNE	5–45 μa	Proper operation of base rf oscillator.
		1KC ADJ	0 db	Proper output of 1-kc oscillator.
		MTR CAL	0 db	Correct calibration of meter amplifier circuit.
		DISCR RF DRIVE.	0 db	Proper drive to afc discriminator to calibrate ac output of afc discriminator.

Meter	Control	Position	Normal indication on meter	Significance of normal indication
		1KC IN	0 db	Proper level of received 1-kc test signal from telephone terminal. (The 1-kc signal is not transmitted continuously.)
		68KC IN	0 db	Proper level of received 68-kc pilot signal from telephone terminal. (The 68-kc signal is present only in an AN/TCC–7 system.)
		MOD 1KC IN	0 db for C-band operation; +2 db for B-band operation.	Proper modulation level produced by 1-kc test signal from telephone terminals.
		MOD 68KC IN	Same as for MOD 1KC IN position.	Proper modulation level produced by 68-kc pilot signal from telephone terminal.
		MOD ADJ*		
TEST	TEST switch	OSC MOD PLATE.	14 ±2 μa	Proper operation of reactance modulator and base rf oscillator.
		DRIVER GRID	10–45 μa	Proper drive to driver stage; proper operation and tuning of buffer amplifiers.
		DRIVER CATH	25 μa or lower	Proper operation of driver; proper adjustment of DRIVER OUTPUT COUPLING control.
		MULT GRID	30 μa for C-band tuner (not used for B-band tuner).	Proper drive supplied to C-band rf tuner; proper adjustment of MULTIPLIER GRID tuning control.
		MULT CATH	14 μa or lower for C-band tuner (not used for B-band tuner).	Proper operation of multiplier of C-band rf tuner; proper adjustment of SCREEN VOLTS ADJ control.
		PWR AMPL GRID.	20–30 μa for B-band. 20–40 μa for C-band.	Proper drive supplied to power amplifier of the tuner used; proper adjustment of GRID control of B-band rf tuner or of POWER AMPLIFIER GRID control of C-band rf tuner.
		PWR AMPL CATH.	27.5 μa maximum for B-band. 25 μa maximum for C-band.	Proper operation of power amplifier; proper adjustment of SCREEN VOLTS ADJ control.
		FWD PWR	30 μa or higher	Proper power output to antenna.
		REFL PWR	10 μa or lower	Satisfactory match at antenna.

Meter	Control	Position	Normal indication on meter	Significance of normal indication
DC VOLTS meter of POWER Supply PP-685/TRC.	DC TEST switch	150 UPPER SCALE.	150 volts	+150-volt B+ output of power supply is normal.
		750 LOWER SCALE.	850 volts for B-band tuner. 750 volts for C-band tuner.	High-voltage output to tuner and driver circuits is normal.
		275 LOWER SCALE.	200–350 volts	Screen voltage for tuner is normal.
AC VOLTS meter of Power Supply PP-685/TRC.	INCR OUT switch on auto-transformer.		115 ±5.5 volts	Ac input to power supply is normal.

*Do not use this position for operating checks because it could interrupt existing order-wire communication.

c. Operating Checks for Radio Receiver.

Meter	Control	Position	Normal indication on meter	Significance of normal indication
MEASURE meter of receiver.	MEASURE switch.	OSC	15 μa or higher	Oscillator of receiver tuner is operating normally.
		MIX	15 μa or higher	Mixer of receiver tuner is operating normally.
		SIG LEV	30 μa ± 5 ua	Signal strength of received rf signal, rf tuner, and receiver if circuits is normal.
		1ST LIM	10 μa ± 5 ua + 10 ua	Coupling between if amplifier and limiter is normal.
		2ND LIM	30 μa ± 10 ua + 20 ua	First limiter stage is normal.
		AFC BAL*		
		MTR CAL	0 ±5 db	Meter reads 0 when a signal of +10 db is applied.
		1KC OUT	0 ±5 db	Second limiter, discriminator, and base-band amplifiers are normal.
		68KC OUT	0 ±5 db	68-kc pilot signal from Telephone Terminal AN/TCC-7 is being received normally.
		B+	30 ±1 μa	+150-volt B+ supply of receiver is normal.

*Do not use this position for operating checks. The indication obtained in this position is meaningless unless the AFC DISABLE switch is operated. Because operation of the AFC DISABLE switch may affect operation, do not turn this switch while the radio set is operating in the system.

122. Interoperation With British Wireless Set C–41

a. British Wireless Set C–41 uses a crystal reference frequency-control system in both the transmitter and receiver. The rf channels of the transmitter in the 50- to 100-mc band occur normally at integral multiples of 1 mc. The frequency transmitted may be maintained at any frequency in the 50- to 100-mc band by the use of specially ground crystals. The emphasis circuits employed in the C–41 result in frequency modulation from 30 cps to 60 kc.

b. Interoperation of Radio Set AN/TRC–24 and British Wireless Set C–41 is possible after certain changes are made in the equipments. If the C–41 transmitter is operated with the AN/TRC–24 for a 12-traffic channel system, the deemphasis circuit in the AN/TRC–24 must be removed and attenuation inserted to prevent overloading of the receiver base-band amplifier; or the deemphasis may be compensated for by adding a special equalizer and about 5-db flat gain at the output of the receiver. The flat gain could in many cases be obtained in the following transmitter of a radio-relay set or in the telephone equipment connected directly to the radio-terminal set. No modifications are known to be necessary if interoperation using a four-channel system is desired. If an AN/TRC–24 transmitter is worked in conjunction with a C–41 receiver, special crystals must be supplied for the C–41 receiver, ground to the rf channel frequency corresponding to those in the AN/TRC–24 in addition, the preemphasis network in the AN/TRC–24 transmitter must be removed and the input attenuator properly adjusted for operation, using a 12-channel carrier telephone system. If a four-channel system is used in the above arrangement, no circuit modification other than the special crystal mentioned above is known to be necessary. It is possible to interoperate an AN/TRC–24 transmitter and a C–41 receiver without special crystals by operating the AN/TRC–24 transmitter without afc, tuning the AN/TRC–24 transmitter to the C–41 receiver frequency, and manually controlling the frequency of the AN/TRC–24 transmitter by using Frequency Meter AN/URM–81 (par. 131).

123. Antijamming Procedure

When an operator recognizes that his receiver is being jammed by enemy interference he will promptly inform the officer in charge. *Under no conditions will he stop operating.* To provide maximum intelligibility of jammed signals, he will follow the operational procedure in the sequence outlined below.

a. Detune the receiver slightly below or above the operating channel frequency. This may permit some degree of read-through.

b. Turn the antenna through small angles in both directions with respect to the desired signal. This may minimize the effect of the interfering signal and provide some degree of read-through.

c. Adjust the SQUELCH control for best reception. Turn it to the extreme clockwise position if this control does not aid reception.

d. Readjust the band-pass filter controls slightly. Where the interfering signal and received signal are not of the same frequency, attenuation of the interfering signal may occur.

e. Vary the OUTPUT ADJ control for maximum signal gain.

f. Request a change in frequency and call sign if the steps in *a* through *e* above do not provide communication.

g. If the jamming action is so thorough and complete that communication is impossible, report this fact to the officer in charge. Use some alternate means of getting the messages through. Continue to operate unless specifically ordered to do otherwise. The enemy may not realize the success of his jamming action and shift to another frequency.

124. Stopping Procedure

Upon receiving instructions from the control office to stop operating, follow the procedure outlined in *a* below.

a. Normal Stopping Procedure.

(1) Set the POWER switch on the receiver and the 115V AC switch on the power supply to the OFF position.

(2) Turn off Gasoline Engine Generator Set PU–286/G (refer to TM 11–940A).

b. Emergency Stopping Procedure. In an emergency, it may be necessary to turn off the radio set and associated power equipment quickly. This can be accomplished by pulling cable CX–2251/U from the INPUT connector of Interconnecting Box J–532/U.

SECTION III. OPERATION UNDER UNUSUAL CONDITIONS

125. General Operation Under Unusual Conditions

Communication systems using Radio Set AN/TRC–24 may have to be operated in regions where there is extreme cold, heat, humidity, moisture, sand conditions, etc. The radio set will operate in a temperature range from —65° to +150° F. Region with extreme temperatures place a great strain on the equipment, and it is important to take special precautions if serious breakdowns are to be avoided. Paragraphs 126 through 128 contain instructions for minimizing the effect of these unusual operating conditions.

126. Operation in Arctic Climates

Subzero temperature and climatic conditions associated with cold weather affect the efficient operation of the system. Observe the following instructions and precautions:

a. Handle the equipment carefully.

b. Keep the equipment as warm and dry as possible.

c. When equipment that has been exposed to the cold air is brought into a warm room, moisture will condense on it until the equipment reaches room temperature. When the equipment has reached room temperature, dry it thoroughly. Moisture may condense on the equipment also after exposure during a cold night.

127. Operation in Tropical Climates

When operated in tropical climates, radio equipment should be installed in tents, huts or, when necessary, in underground dugouts. If equipment is installed below ground and if it is set up in swampy areas, moisture conditions are more acute. Ventilation usually is very poor, and the high relative humidity may cause moisture to condense on the equipment whenever the temperature of the equipment becomes lower than that of the surrounding air. To minimize this condition, place lighted electric bulbs near the equipment.

128. Operation in Desert Climates

a. High temperature similar to tropical climates are characteristic of desert areas. Use the same measures to insure proper operation of the equipment (par. 127).

b. The main problem in desert areas is the large amount of sand, dust, and dirt that enters the moving parts of the radio equipment. The ideal precaution is to house the equipment in a dustproof shelter. However, such a building is seldom available and would require air conditioning. The next best course is to make the building in which the equipment is located as dustproof as possible. Hang wet sacking over the windows and doors. Cover the inside walls with heavy paper. Use sand to secure the outside walls of tents to prevent their flapping in the wind.

c. Never tie power cords or other wiring connections to either the inside or the outside of tents. Desert areas are subject to sudden wind squalls, which may jerk connections loose or break the lines.

d. Be careful to keep the equipment as free from dust as possible. Make frequent preventive maintenance checks. Pay particular attention to parts that require lubrication. Excessive amounts of dust, sand, or dirt that come into contact with oil and grease, result in grit, which will damage the equipment.

e. The fall in temperature during the night often causes moisture on the equipment.

129. Operation With Excessive or Low System Noise

a. General Operating with Excessive System Noise.

(1) Occasionally traffic channel noise is excessive (par. 118*e*). Excess noise may be due to a higher noise level at one or more radio jumps than at the other jumps. One jump may have relatively high path attenuation due to a long transmission path or one having line-of-sight obstructions. A high noise level may be caused by external sources such as ignition or radio interference also.

(2) Under the conditions given in (1) above, some improvement in signal-to-noise ratio may be made. By increasing the deviation of the transmitter, and reducing the gain of the receiver where the high noise level occurs, better reception is obtained.

(3) There are limits to the signal-to-noise ratio improvement obtainable because distortion increases with increased deviation. The signal-to-noise ratio increases slowly at first but very rapidly after an increase in deviation. The critical point is reached when the signal-to-noise ratio is increased to approximately 6 db. In general, this is the maximum increase that can be used. The increase in distortion caused by increased deviation is a function of the loading of the traffic channels on the system, that is, whether a 4- or 12-channel carrier system is in use, and the average number of channels that are occupied.

b. Procedure for Operating With Excessive System Noise. When it is determined from the noise measurements (par. 118*e*) that a particular jump is operating with excessive noise, the procedure outlined in (1) through (5) below may be used.

(1) Use the order wire for communications between the transmitter and receiver of the jump. Perform the procedure outlined in paragraph 118*e*.

(2) Increase the INPUT ADJ control of the transmitter by 3 db (three steps (par. 80)).

(3) Decrease the OUTPUT ADJ control of the receiver by 3 db (three steps (par. 87)).

(4) Note the indication on Voltmeter ME–30A/U (par. 118*e*).

(5) If the reading on meter ME–30A/U remains greater than the allowable limit (par. 118*e*) : increase the transmitter INPUT ADJ control and at the same time decrease the receiver OUTPUT ADJ control in 1-db steps until the reading on meter ME–30A/U is less than the allowable indication; or, until the INPUT ADJ and OUTPUT ADJ controls are respectively increased and decreased by 6 db. If an increase of 6 db does not reduce the reading on meter ME–30A/U sufficiently, the jump length should be shortened.

Caution: Do not turn the transmitter MEASURE switch to the 1KC IN, 68KC IN, MOD 1KC IN, and MOD 68KC IN positions after making the above adjustments because the transmitter MEASURE meter will read off-scale if the adjustments are great enough.

c. General Operation with Low System Noise. In a radio system, one or more jumps may have fairly low-path attenuation because of a short path or a path free of obstructions. For these jumps there will likely be an ample signal-to-noise ratio margin. Advantage may be taken of this fact to improve the signal-to-distortion ratio by decreasing the deviation of the transmitter for the jump having the large signal-to-noise ratio margin.

d. Procedure for Operating with Low System Noise. When it is determined from the noise measurement (par. 118*e*) that a particular jump is operating with very much less than the allowable noise, the procedure outlined below may be used.

(1) Use the order wire for communications between the transmitter and receiver of the jump.

(2) Decrease the INPUT ADJ control of the transmitter by 3 db.

(3) Increase the OUTPUT ADJ control of the receiver by 3 db.

130. Operation Without Afc

When it is necessary to operate the transmitter without afc, follow the procedure outlined in *a* below. To operate the receiver without afc, follow the procedure outlined in *b* below.

a. Operating Transmitter Without Afc.

(1) Set the AFC switch to the OFF position.

(2) Site Frequency Meter AN/URM–81 adjacent to the transmitter.

(3) Extend a pickup lead from the frequency meter along the ground underneath the transmitter antenna.

(4) Use the table given in paragraph 52*d* to determine the desired operating frequency.

(5) Note the reading on the frequency meter and adjust the RF CHANNEL TUNE control of the transmitter at 15-minute intervals to keep the transmitter operating at the desired frequency as indicated on the frequency

meter. Under conditions of greatly varying temperatures and line voltages, the RF CHANNEL TUNE control will have to be adjusted continuously to keep the transmitter on frequency.

b. Operating Receiver Without Afc.

(1) Set the AFC-OFF-CAL switch to the OFF position.

(2) Continuously adjust the AFC control for an indication of O on the receiver FREQ DRIFT meter.

CHAPTER 4

ORGANIZATIONAL MAINTENANCE

Section I. TOOLS AND EQUIPMENT

131. Tools and Materials Supplied with Radio Set AN/TRC–24

The tools, materials, and test equipment listed below are authorized for use to perform organizational maintenance.

a. Test Equipment.

Electron Tube Test Set TV–7/U, TM 11–5083. Voltmeter ME–30A/U or Electronic Multimeter ME–6/U.

b. Tools and Materials.

Tool Equipment TE–41 or TE–73
Orangestick*
Cheesecloth, cotton*
Paper, sand, flint No. 000
Carbon tetrachloride
Solvent, Dry Cleaning (SD) (Fed spec No. P–S–661a)
Capacitor, .1 μf, 200 V
Resistor, 130-ohm, 2-watt, ±5%

132. Special Tools Issued with Equipment

Most of the special tools necessary for the maintenance of the AN/TRC–24 are issued with and stored in the radio set. These tools are listed in *a* through *c* below.

a. A special tube puller (fig. 123) for extracting the 4X150-type vacuum tubes is stored on the transmitter C-band tuner.

b. Two tube-pin straighteners for straightening the pins of seven- and nine-pin tubes are fastened to the receiver (fig. 22).

c. An alinement tool for adjusting slug-tuned coils and trimmer capacitors is stored in the receiver (fig. 22). This tool is used for adjusting if transformers and rf tuners.

d. Three hexagonal (Allen) wrenches for adjusting and disassembling mechanical assemblies are stored in the receiver (fig. 22).

133. Special Tool Not Supplied

a. General. Use the shorting stick (fig. 96) (*b* below) to discharge capacitors before performing preventive maintenance or trouble-shooting.

(1) Normally, when the power is turned off, capacitors in the equipment will discharge to ground through bleeder resistors or voltage dividers.

(2) If the discharge network should fail, the capacitors are likely to remain charged after the power is turned off.

(3) Contact with a charged capacitor might result in severe burns. Shorting capacitors with a shorting stick prevents such accidents.

B. Fabrication of Shorting Stick. If a shorting stick is not available, one can be made by following the procedure outlined in (1) through (8) below.

(1) Get a hardwood dowel approximately ½-inch in diameter and 15 inches long.

(2) Drill a ½-inch hole in one end of the dowel to a depth of 2 inches.

(3) Press fit a 3-inch piece of copper or brass bus wire into the hole as far as it will go.

(4) Solder one end of a 36-inch piece of #10 flexible stranded wire to the bus wire as close to the dowel as possible.

(5) Attach a battery clamp to the other end of the wire.

(6) Apply several layers of friction tape over the soldered connection at the bus wire, leaving approximately ½-inch of the bus wire bare.

*Part of Tool Equipment TE–113.

(7) Continue the tape over the dowel for a distance of 2 inches.

(8) Form an insulated handle for the shorting stick by winding two layers of rubber tape and two layers of friction tape around the other end of the dowel for a distance of 6 inches.

c. Use of Shorting Stick.

(1) Connect the battery cable to a known chassis ground as close to a capacitor as possible.

(2) Hold the shorting stick by the insulated handle and touch the capacitor terminals with the exposed bus wire.

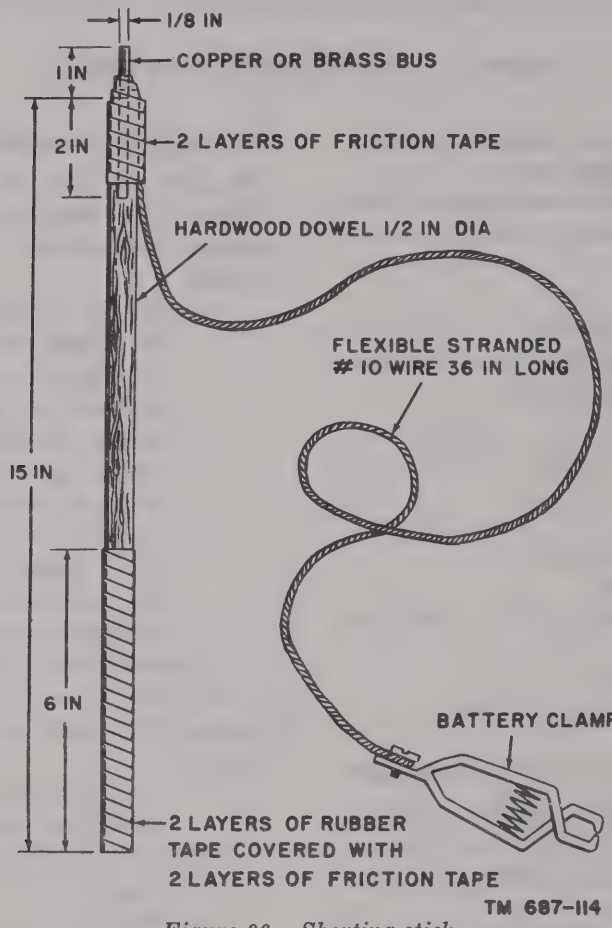

Figure 96. Shorting stick.

Section II. PREVENTIVE MAINTENANCE SERVICES

134. Definition of Preventive Maintenance

Preventive maintenance is work performed on equipment (usually when the equipment is not in use) to keep it in good working order so that breakdowns and needless interruptions in service will be kept to a minimum. Preventive maintenance differs from trouble shooting and repair since its object is to prevent troubles.

135. General Preventive Maintenance Techniques

a. Use a #000 sandpaper to remove corrosion.

b. Use a clean, dry, lint-free cloth or a dry brush for cleaning.

(1) If further cleaning is necessary, moisten the cloth or brush with solvent (SD); then wipe the parts dry

with a cloth. Do not use solvent (SD) on electrical contacts.

(2) Clean electrical contacts with a cloth moistened with carbon tetrachloride; then wipe the contacts dry with a clean cloth.

Caution: Repeated contact of carbon tetrachloride with the skin or prolonged breathing of the fumes is dangerous. Be sure that adequate ventilation is provided.

c. If available, dry compressed air at a line pressure not exceeding 30 pounds per square inch (psi) may be used to remove dust from inaccessible places. Be careful that mechanical damage from the air blast does not result.

d. For further information on preventive maintenance techniques, refer to TB SIG 178.

136. Use of Preventive Maintenance Forms (figs. 97 and 98).

a. The decision as to which items on DA Forms 11–238 and 11–239 are applicable to this equipment is a tactical decision. The decision is made in the case of first echelon maintenance by the communication officer/chief or his designated representative, and in the case of second and third echelon maintenance, by the individual making the inspection. Instructions for the use of each form appear on the reverse side of the form.

b. Items struck out in figures 97 and 98 are not applicable to Radio Set AN/TRC–24. Additional information is outlined in paragraphs 137 and 138.

137. Performing Exterior Preventive Maintenance

Caution: Tighten screws, bolts, and nuts carefully. Fittings tightened beyond pressure for which they are designed will be damaged or broken. Be very careful when checking the seating of the items listed in *d* and *l* below. Excessive twisting and strain will cause damage.

a. Check for completeness and satisfactory condition of the radio set. Typical components for each set are listed in paragraph 7.

b. Check suitability of location and installation for normal operation (par. 40).

c. Remove dirt and moisture from antenna and coaxial connectors each time the antenna is disassembled and packed in transit cases. Wrap a protective layer of tape around each coaxial connector of the antenna cables after they have been checked for cleanliness.

d. Check the seating of readily accessible items such as fuses (pars. 84 and 86) and connectors (par. 78). Check the seating of each plug-in assembly in the transmitter, receiver, and power supply.

e. Check the knob set screws of each control to be sure that they are tight. Rotate each control within the limits of its range when checking the control for binding and scraping (pars. 80–90).

f. Use the equipment performance checklist (par. 179) to check the receiver for normal operation.

g. Tighten each of the cam-lock fasteners that secure the plug-in assemblies to the transmitter and receiver (par. 64). Also tighten the fasteners that secure the front panels to the transit cases.

h. Refer to paragraphs 143 and 144 for procedures concerning moistureproofing, fungiproofing, rustproofing and repainting the equipment. Refer to paragraph 135 for procedures concerning removal of corrosion.

i. Check the coaxial antenna cable to see that it has not been damaged by vehicles running over it. Refer to paragraphs 154 and 337 for procedures to check and repair the coaxial-type cables.

j. Inspect the antenna for bent mast sections, corrosion, and loose fit (par. 70*f*).

k. Inspect all bags similar to those contained in Antenna Case CY–1370/TRC (fig. 17), for tears, mildew, or fraying.

l. Inspect the connectors, blowers, motor (par. 174), and capacitors for loose connections. *Do not strike fragile items such as crystals, relays, and pilot lamps with steel tools when checking for looseness.*

m. Refer to paragraph 173 for procedure to remove the air filter from the receiver.

n. When inspecting the meter for damaged glass, check and, *if necessary,* adjust the zero setting of the meter needle.

o. Refer to paragraph 142 for weatherproofing information under extreme conditions.

p. Readjust the tension on the antenna guy wires if the antenna mast leans or is bent (par. 67*b*(27)).

OPERATOR FIRST ECHELON MAINTENANCE CHECK LIST FOR SIGNAL CORPS EQUIPMENT

RADIO COMMUNICATION, DIRECTION FINDING, CARRIER, RADAR

INSTRUCTIONS: See other side

EQUIPMENT NOMENCLATURE	EQUIPMENT SERIAL NO.

LEGEND FOR MARKING CONDITIONS: ✓ Satisfactory; I Adjustment, repair or replacement required; Ⓧ Defect corrected.
NOTE: Strike out items not applicable.

DAILY

NO.	ITEM	CONDITION S	M	T	W	T	F	S
1	COMPLETENESS AND GENERAL CONDITION OF EQUIPMENT *(receiver, transmitter, carrying cases, wire and cable, microphones, tubes, spare parts, technical manuals and accessories).* PAR. 137a							
2	LOCATION AND INSTALLATION SUITABLE FOR NORMAL OPERATION. PAR. 137b							
3	CLEAN DIRT AND MOISTURE FROM ANTENNA, ~~MICROPHONE~~, ~~HEADSETS~~, ~~RECEIVERS~~, ~~KEYS~~, JACKS, PLUGS, TELEPHONES, ~~CARRYING BAGS~~, COMPONENT PANELS. PAR. 137c							
4	INSPECT SEATING OF READILY ACCESSIBLE "PLUCK-OUT" ITEMS: ~~FUSES~~, LAMPS, CRYSTALS, FUSES, CONNECTORS, ~~VIBRATORS~~, PLUG-IN COILS AND RESISTORS. PAR. 137d							
5	INSPECT CONTROLS FOR BINDING, SCRAPING, EXCESSIVE LOOSENESS, WORN OR CHIPPED GEARS, MISALIGNMENT, POSITIVE ACTION. PAR. 137e							
6	CHECK FOR NORMAL OPERATION. PAR. 137f							

WEEKLY

NO.	ITEM	CONDITION	NO	ITEM	CONDITION
7	CLEAN AND TIGHTEN EXTERIOR OF COMPONENTS AND CASES, RACK MOUNTS, SHOCK MOUNTS, ANTENNA MOUNTS, COAXIAL TRANSMISSION LINES, ~~WAVE GUIDES~~, AND CABLE CONNECTIONS. PAR. 137g		13	~~INSPECT STORAGE BATTERIES FOR DIRT, LOOSE TERMINALS, ELECTROLYTE LEVEL AND SPECIFIC GRAVITY, AND DAMAGED CASES~~.	
8	INSPECT CASES, MOUNTINGS, ANTENNAS, TOWERS, AND EXPOSED METAL SURFACES, FOR RUST, CORROSION, AND MOISTURE. PAR. 137h		14	CLEAN AIR FILTERS, BRASS NAME PLATES, DIAL AND METER WINDOWS, JEWEL ASSEMBLIES. PAR. 137m	
9	INSPECT CORD, CABLE, WIRE, AND SHOCK MOUNTS FOR CUTS, BREAKS, FRAYING, DETERIORATION, KINKS, AND STRAIN. PAR. 137i		15	INSPECT METERS FOR DAMAGED GLASS AND CASES. PAR. 137n	
10	INSPECT ANTENNA FOR ECCENTRICITIES, CORROSION, LOOSE FIT, DAMAGED INSULATORS AND REFLECTORS. PAR. 137j		16	INSPECT SHELTERS AND COVERS FOR ADEQUACY OF WEATHER-PROOFING. PAR. 137o	
11	INSPECT CANVAS ITEMS, LEATHER, AND CABLING FOR MILDEW, TEARS, AND FRAYING. PAR. 137k		17	CHECK ANTENNA GUY WIRES FOR LOOSENESS AND PROPER TENSION. PAR. 137p	
12	INSPECT FOR LOOSENESS OF ACCESSIBLE ITEMS: SWITCHES, KNOBS, JACKS, CONNECTORS, ELECTRICAL TRANSFORMERS, POWERSTATS, RELAYS, ~~SELSYNS~~, MOTORS, BLOWERS, CAPACITORS, GENERATORS, AND PILOT LIGHT ASSEMBLIES. PAR 137l		18	~~CHECK TERMINAL BOX COVERS FOR BRAKING, LEAKS, DAMAGED GASKETS, DIRT AND GREASE~~.	

19 IF DEFICIENCIES NOTED ARE NOT CORRECTED DURING INSPECTION, INDICATE ACTION TAKEN FOR CORRECTION.

DA FORM 1 MAY 51 11-238 REPLACES DA AGO FORM 419, 1 DEC 50, WHICH IS OBSOLETE.

TM 687-194

Figure 97. DA Form 11-238.

SECOND AND THIRD ECHELON MAINTENANCE CHECK LIST FOR SIGNAL CORPS EQUIPMENT

RADIO COMMUNICATION, DIRECTION FINDING, CARRIER, RADAR

INSTRUCTIONS: See other side

EQUIPMENT NOMENCLATURE | EQUIPMENT SERIAL NO.

LEGEND FOR MARKING CONDITIONS: ✓ Satisfactory; X Adjustment, repair or replacement required; ⓒ Defect corrected; NOTE: Strike out items not applicable.

NO.	ITEM	CONDITION
1	COMPLETENESS AND GENERAL CONDITION OF EQUIPMENT *(receiver, transmitter, carrying cases, wire and cable, microphones, tubes, spare parts, technical manuals and accessories).* PAR. 137a	
2	LOCATION AND INSTALLATION SUITABLE FOR NORMAL OPERATION. PAR. 137b	
3	CLEAN DIRT AND MOISTURE FROM ANTENNA, ~~MICROPHONES, HEADSETS, CHESTSETS,~~ KEYS, JACKS, PLUGS, TELEPHONES, ~~CARRYING CASES~~ COMPONENT PANELS. PAR. 137c	
4	INSPECT SEATING OF READILY ACCESSIBLE "PLUCK-OUT" ITEMS: TUBES, LAMPS, CRYSTALS, FUSES, CONNECTORS, ~~VIBRATORS~~ PLUG-IN COILS AND RESISTORS. PAR. 137d	
5	INSPECT CONTROLS FOR BINDING, SCRAPING, EXCESSIVE LOOSENESS, WORN OR CHIPPED GEARS, MISALIGNMENT, POSITIVE ACTION. PAR. 137e	
6	CHECK FOR NORMAL OPERATION. PAR. 137f	
7	CLEAN AND TIGHTEN EXTERIOR OF COMPONENTS AND CASES, RACK MOUNTS, SHOCK MOUNTS, ANTENNA MOUNTS, COAXIAL TRANSMISSION LINES, ~~WAVE GUIDES~~, AND CABLE CONNECTIONS. PAR. 137g	
8	INSPECT CASES, MOUNTINGS, ANTENNAS, TOWERS, AND EXPOSED METAL SURFACES, FOR RUST, CORROSION, AND MOISTURE. PAR. 137h	
9	INSPECT CORD, CABLE, WIRE, AND SHOCK MOUNTS FOR CUTS, BREAKS, FRAYING, DETERIORATION, KINKS, AND STRAIN. PAR. 137i	
10	INSPECT ANTENNA FOR ECCENTRICITIES, CORROSION, LOOSE FIT, DAMAGED INSULATORS AND REFLECTORS. PAR. 137j	
11	INSPECT CANVAS ITEMS, LEATHER, AND CABLING FOR MILDEW, TEARS, AND FRAYING. PAR. 137k	
12	INSPECT FOR LOOSENESS OF ACCESSIBLE ITEMS: SWITCHES, KNOBS, JACKS, CONNECTORS, ELECTRICAL TRANSFORMERS, POWERSTATS, RELAYS, ~~GEARING~~, MOTORS, BLOWERS, CAPACITORS, GENERATORS, AND PILOT LIGHT ASSEMBLIES. PAR. 137l	
13	~~INSPECT STORAGE BATTERIES FOR DIRT, LOOSE TERMINALS, ELECTROLYTE LEVEL AND SPECIFIC GRAVITY, AND DAMAGED CASES.~~	
14	CLEAN AIR FILTERS, BRASS NAME PLATES, DIAL AND METER WINDOWS, JEWEL ASSEMBLIES. PAR. 137m	
15	INSPECT METERS FOR DAMAGED GLASS AND CASES. PAR. 137n	
16	INSPECT SHELTERS AND COVERS FOR ADEQUACY OF WEATHERPROOFING. PAR. 137o	
17	CHECK ANTENNA GUY WIRES FOR LOOSENESS AND PROPER TENSION. PAR. 137p	
18	~~CHECK TERMINAL BOX COVERS FOR BRAKES, LEAKS, DAMAGED GASKETS, DIRT AND GREASE.~~	
19	ELECTRON TUBES - INSPECT FOR LOOSE ENVELOPES; CAP CONNECTORS, CRACKED SOCKETS; INSUFFICIENT SOCKET SPRING TENSION; CLEAN DUST AND DIRT CAREFULLY; CHECK EMISSION OF RECEIVER TYPE TUBES. PAR. 138a	
20	~~INSPECT FILM CUT-OUTS FOR LOOSE PARTS, DIRT, MISALIGNMENT AND CORROSION.~~	
21	INSPECT FIXED CAPACITORS FOR LEAKS, BULGES, AND DISCOLORATION. PAR. 138b	
22	INSPECT RELAY AND CIRCUIT BREAKER ASSEMBLIES FOR LOOSE MOUNTINGS; BURNED, PITTED, CORRODED CONTACTS; MISALIGNMENT OF CONTACTS AND SPRINGS; INSUFFICIENT SPRING TENSION; BINDING OF PLUNGERS AND HINGE PARTS. PAR. 138c	
23	INSPECT VARIABLE CAPACITORS FOR DIRT, MOISTURE, MISALIGNMENT OF PLATES, AND LOOSE MOUNTINGS. PAR. 138d	
24	INSPECT RESISTORS, BUSHINGS, AND INSULATORS, FOR CRACKS, CHIPPING, BLISTERING, DISCOLORATION AND MOISTURE. PAR. 138e	
25	INSPECT TERMINALS OF LARGE FIXED CAPACITORS AND RESISTORS FOR CORROSION, DIRT AND LOOSE CONTACTS. PAR. 138f	
26	CLEAN AND TIGHTEN SWITCHES, TERMINAL BLOCKS, BLOWERS, RELAY CASES, AND INTERIORS OF CHASSIS AND CABINETS NOT READILY ACCESSIBLE. PAR. 138g	
27	~~INSPECT TERMINAL BLOCKS FOR LOOSE CONNECTIONS, CRACKS AND BREAKS.~~	
28	~~CHECK SETTINGS OF ADJUSTABLE RELAYS.~~	
29	LUBRICATE EQUIPMENT IN ACCORDANCE WITH APPLICABLE DEPARTMENT OF THE ARMY LUBRICATION ORDER. PAR. 138h	
30	~~INSPECT GENERATORS, AMPLIDYNES, DYNAMOTORS, FOR BRUSH GEAR, SPRING TENSION, ARCING, AND FITTING OF COMMUTATOR.~~	
31	CLEAN AND TIGHTEN CONNECTIONS AND MOUNTINGS FOR TRANSFORMERS, CHOKES, POTENTIOMETERS, AND RHEOSTATS. PAR. 138i	
32	INSPECT TRANSFORMERS, CHOKES, POTENTIOMETERS, AND RHEOSTATS FOR OVERHEATING AND OIL-LEAKAGE. PAR. 138j	
33	~~BEFORE CHARGING OR STORING - REMOVE BATTERIES.~~	
34	~~INSPECT CATHODE RAY TUBES FOR BURNT SCREEN SPOTS.~~	
35	~~INSPECT BATTERIES FOR SHORTS AND DEAD CELLS.~~	
36	INSPECT FOR LEAKING WATERPROOF GASKETS, WORN OR LOOSE PARTS. PAR. 138k	
37	MOISTURE AND FUNGIPROOF. PAR. 138l	
38	IF DEFICIENCIES NOTED ARE NOT CORRECTED DURING INSPECTION, INDICATE ACTION TAKEN FOR CORRECTION.	

DA FORM 1 MAY 51 11-239 REPLACES DA AGO FORM 419, 1 DEC 50, WHICH IS OBSOLETE.

TM 687-195

Figure 98. DA Form 11-239.

138. Performing Interior Preventive Maintenance

Caution: Disconnect all power and discharge high voltages with the shorting stick (par. 133*c*) before performing the following operations. Upon completion, reconnect the power and check for proper operation.

a. Check the tubes with the electron tube test set according to the procedure outlined in TM 11–5083. Replace the tubes that are gassy. This does not include voltage-regulator tubes, which are designed to contain gas. Gassy tubes glow a characteristic blue color while they are operating.

b. Leaky electrolytic capacitors can sometimes be identified by a white or green powder residue at the terminal connections.

c. The relays of the AN/TRC–24 are sealed and the contacts cannot be cleaned. Check the relays according to the procedures outlined in paragraph 322 if they are suspected of being faulty.

d. Remove the dust from variable capacitors with a fine camel's-hair brush. Be careful not to bend the plates.

e. Check the solder connections while checking for burned elements.

f. Check to see that the terminals of the capacitors and resistors have not been bent near the chassis, creating a possibility of short circuits.

g. Check the shorting plunger and tape drums of the rf tuners. Check all internal adjustments for binding, scraping and looseness.

h. For improvised lubrication instructions, refer to figures 99 through 122.

i. Check the mountings for loose nuts. When tightening the mounting nuts, be careful not to apply too much pressure. Damage to the part will result if excess pressure is applied.

j. Feel the coupling transformers. They should be cool even after the equipment has been operating a relatively long time. The transformers in the power supplies should be rather warm but not excessively hot.

k. Wipe any oil or grease from the rubber gaskets on the transit cases. Check for a tight fit between the transit-case cover and the transit case when the snap catches are closed.

l. Check to see that moistureproofing and fungiproofing protection has been applied after the equipment has been repaired (par. 143).

Section III. LUBRICATION AND WEATHERPROOFING

139. Detailed Lubrication Instructions

Caution: Do not overlubricate. Accumulation of oil or grease and dirt may cause serious damage to movable parts.

a. General.

(1) The type of lubricant to be used, the interval, and the specific instructions for each part of the AN/TRC–24 are listed in figures 99 through 122. Before lubrication, clean all the surfaces to be lubricated; use a lint-free cloth dampened with solvent (SD). Wipe off oil or grease to prevent excess from dripping on electrical parts.

(2) Do not use gasoline as a cleaning fluid for any purpose. When the unit is overhauled or repaired, clean parts with solvent (SD).

(3) Use carbon tetrachloride as a cleaning fluid only in the following cases: on electrical equipment where inflammable solvents can not be used because of fire hazard and for cleaning electrical contacts including plugs, connectors, tube sockets, etc.

(4) Apply Oil Lubricating, Preservative, Special (PL Special) sparingly to all helical springs to prevent wear and rust.

b. Alternate Lubrication Instructions.

(1) Alternate lubrication instructions for the transmitter and receiver drawer-slide assemblies are listed in figure 99. Improvised lubrication instructions for the transmitter chassis, assemblies and rf tuners are listed in figures 100 through 112. Intervals given are maximums for normal 24-hour operation; for abnormal conditions or activities, intervals should be shortened.

Lubricant	Interval
PL–OIL, Lubricating, Special or MIL–L–6085A. All temperatures	A—1 year.

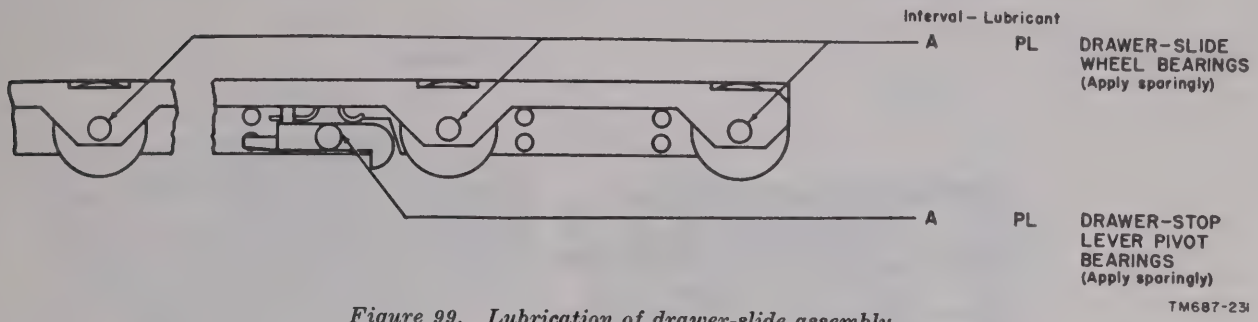

Figure 99. Lubrication of drawer-slide assembly.

Lubricant	Interval
PL–OIL, Lubricating, Special or MIL–L–6085A. All temperatures	A—1 year.

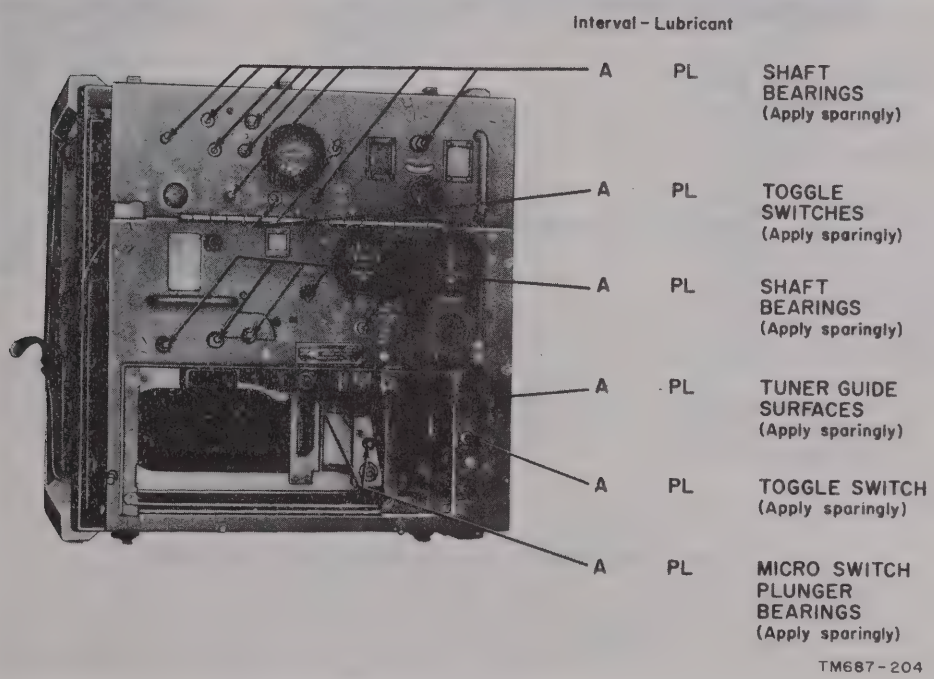

Figure 100. Lubrication of transmitter front-panel controls.

Lubricant	Interval
PL–OIL, Lubricating, Special or MIL–L–6085A. All temperatures GL–GREASE, Aircraft and Instruments (MIL–G–3278). All temperatures.	A—1 year.

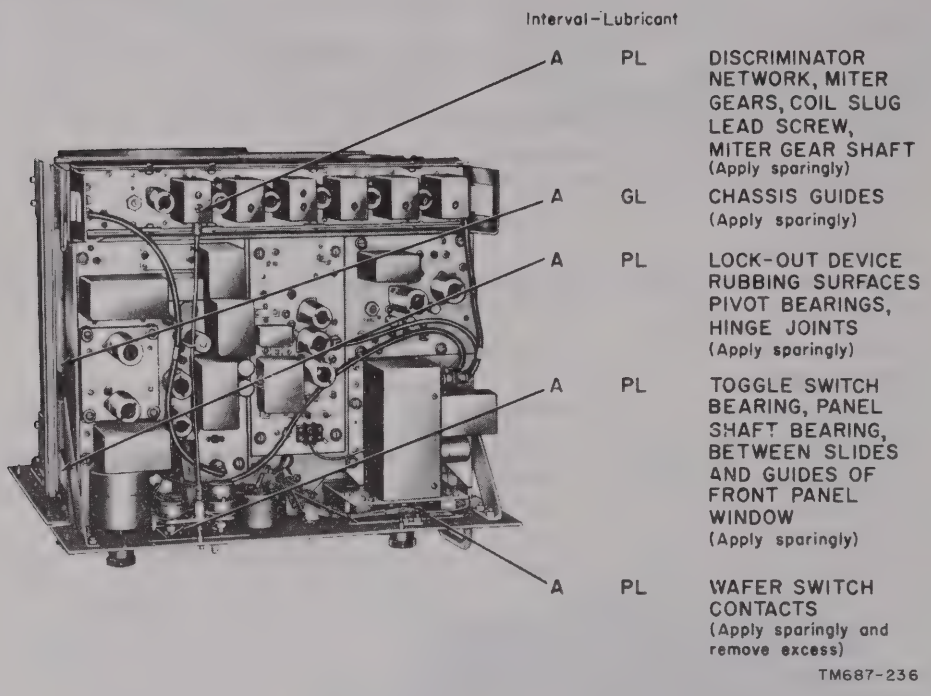

Figure 101. Lubrication of transmitter upper chassis.

Lubricant	Interval
PL–OIL, Lubricating, Special or MIL–L–6085A. All temperatures GL–GREASE, Aircraft and Instruments (MIL–G–3278). All temperatures.	A—1 year. M–2,000 hours of operation.

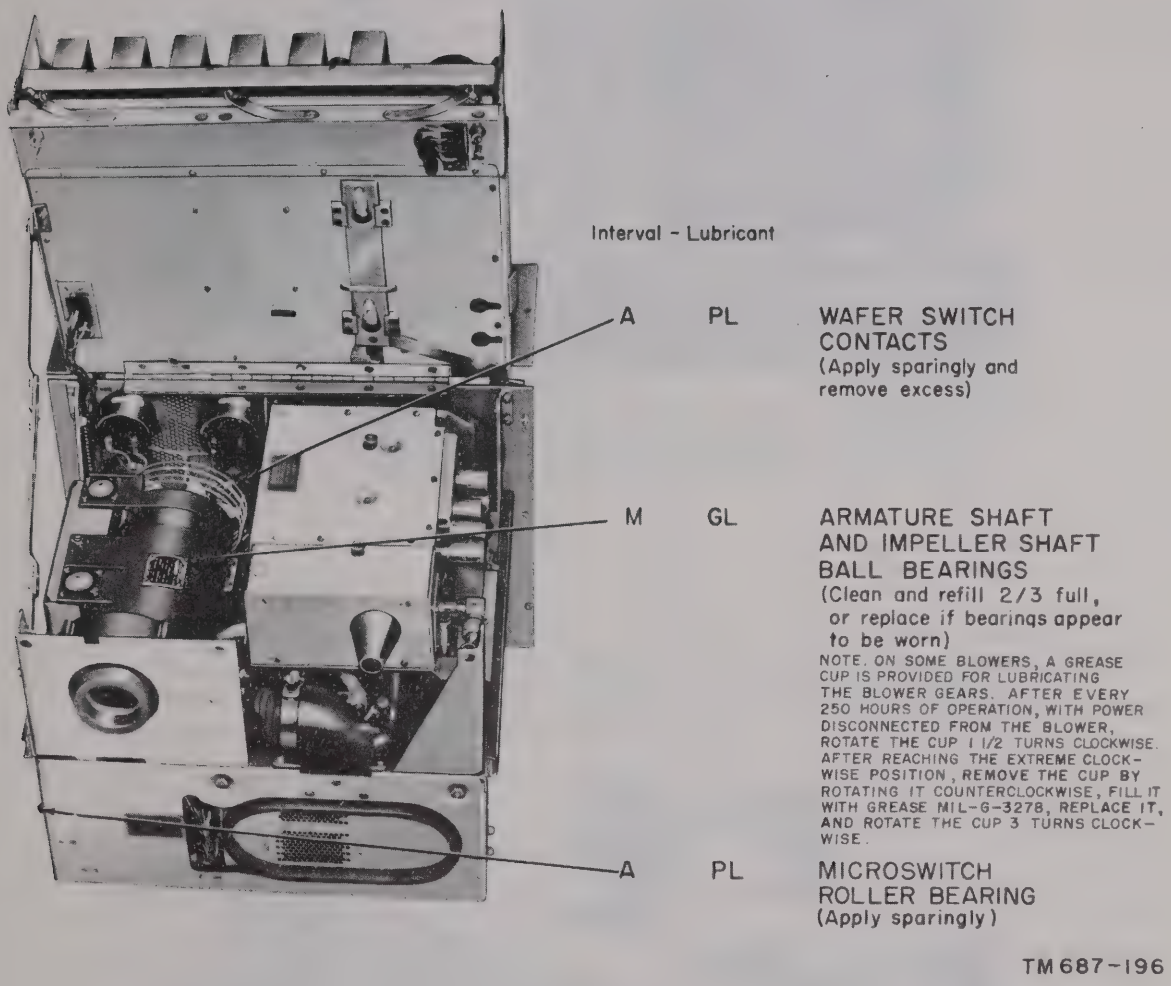

Figure 102. Lubrication of transmitter lower chassis.

Lubricant	Interval
PL–OIL, Lubricating, Special or MIL–L–6085A. All temperatures GL–GREASE, Aircraft and Instruments (MIL–G–3278). All temperatures.	A—1 year.

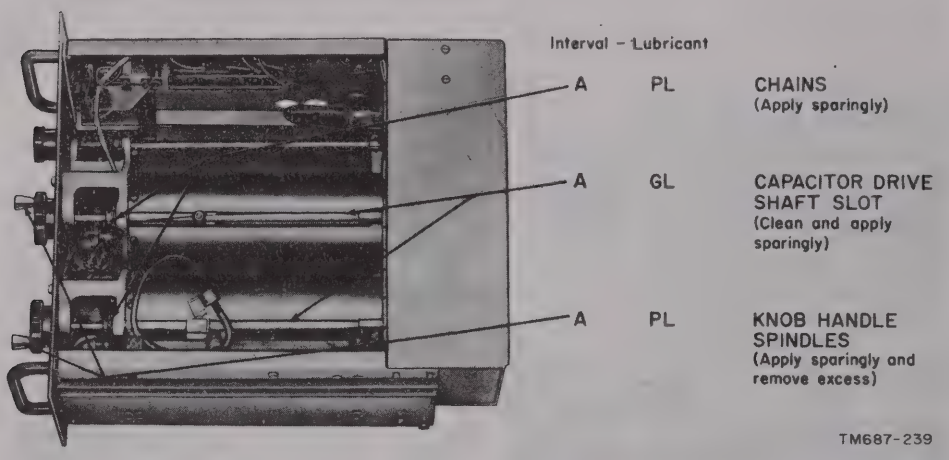

Figure 103. Lubrication of Radio Frequency Amplifier AM–912/TRC, bottom cover removed.

Lubricant	Interval
PL–OIL, Lubricating, Special or MIL–L–6085A. All temperatures GL–GREASE, Aircraft and Instruments (MIL–G–3278). All temperatures.	A—1 year. D—Dismantling.

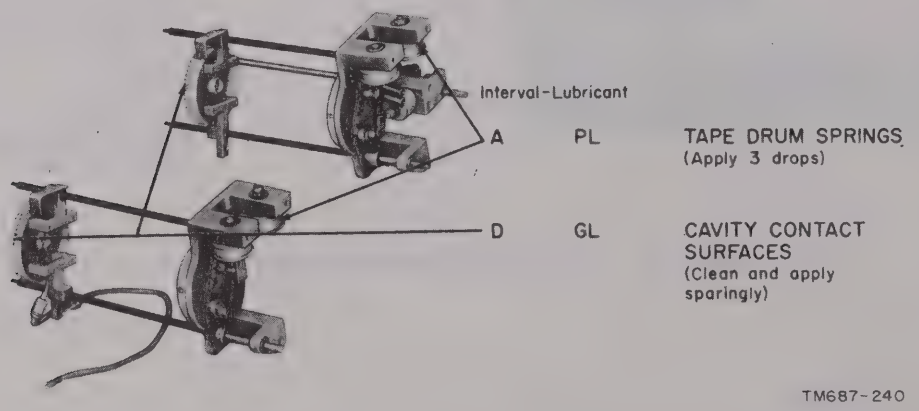

Figure 104. Lubrication of Radio Frequency Amplifier AM-912/TRC parts.

Lubricant	Interval
PL–OIL, Lubricating, Special or MIL–L–6085A. All temperatures	A—1 year.

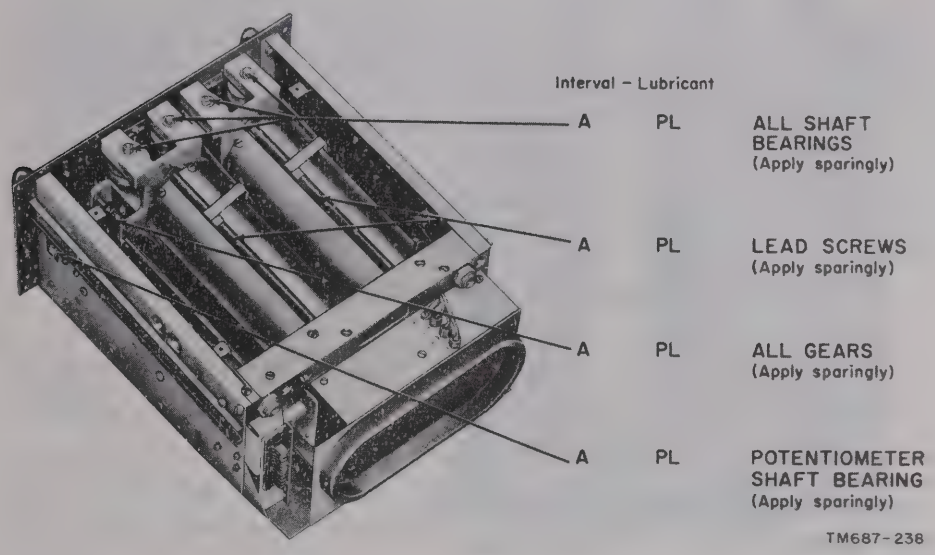

Figure 105. Lubrication of Radio Frequency Amplifier AM–912/TRC, top cover removed.

Lubricant	Interval
PL–OIL, Lubricating, Special or MIL–L–6085A. All temperatures	A—1 year.

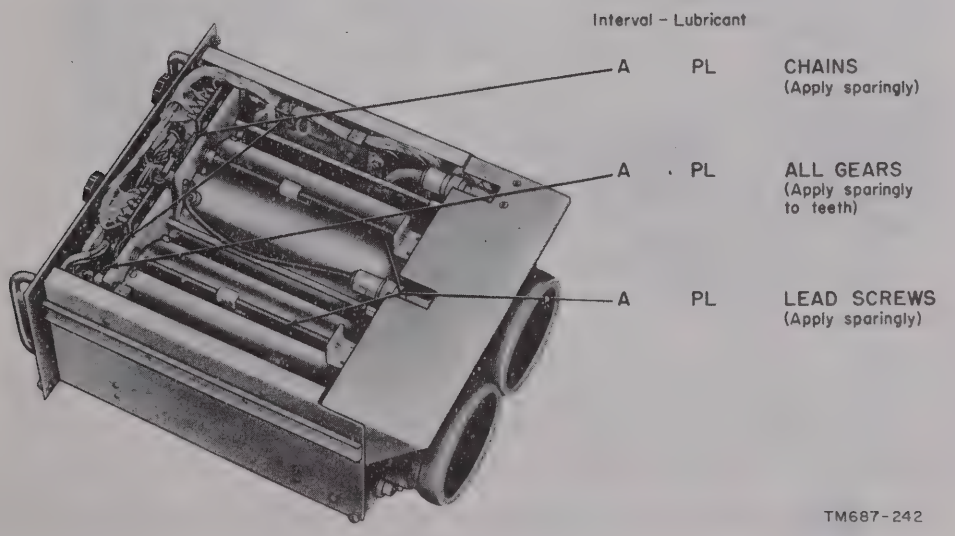

Figure 106. Lubrication of Radio Frequency Amplifier-Multiplier AM–915/TRC, bottom cover removed.

Lubricant	Interval
PL–OIL, Lubricating, Special or MIL–L–6085A. All temperatures	A—1 year.

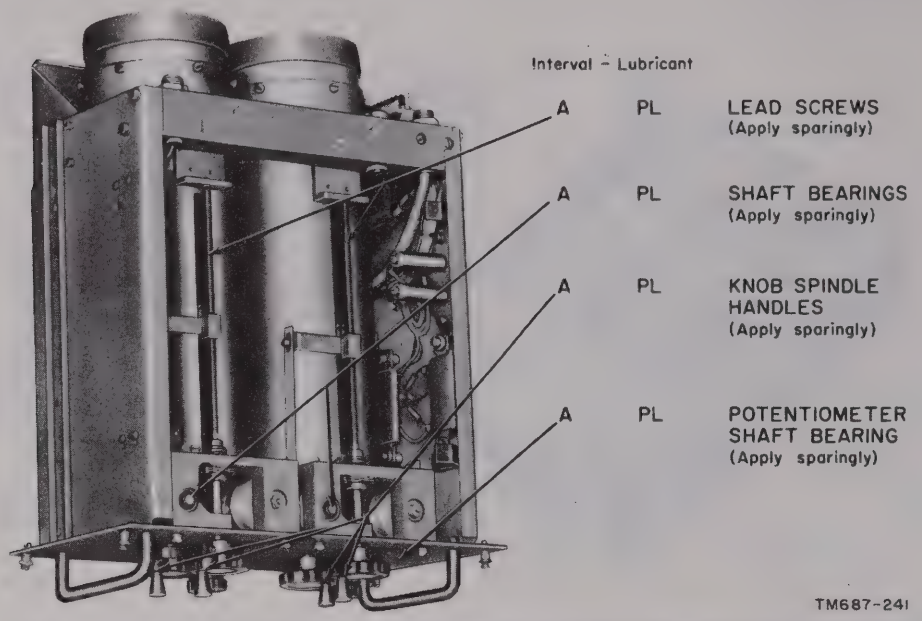

Figure 107. Lubrication of Radio Frequency Amplifier-Multiplier AM–915/TRC, top cover removed.

Lubricant	Interval
GL–GREASE, Aircraft and Instruments (MIL–G–3278). All temperatures.	D—Dismantling.

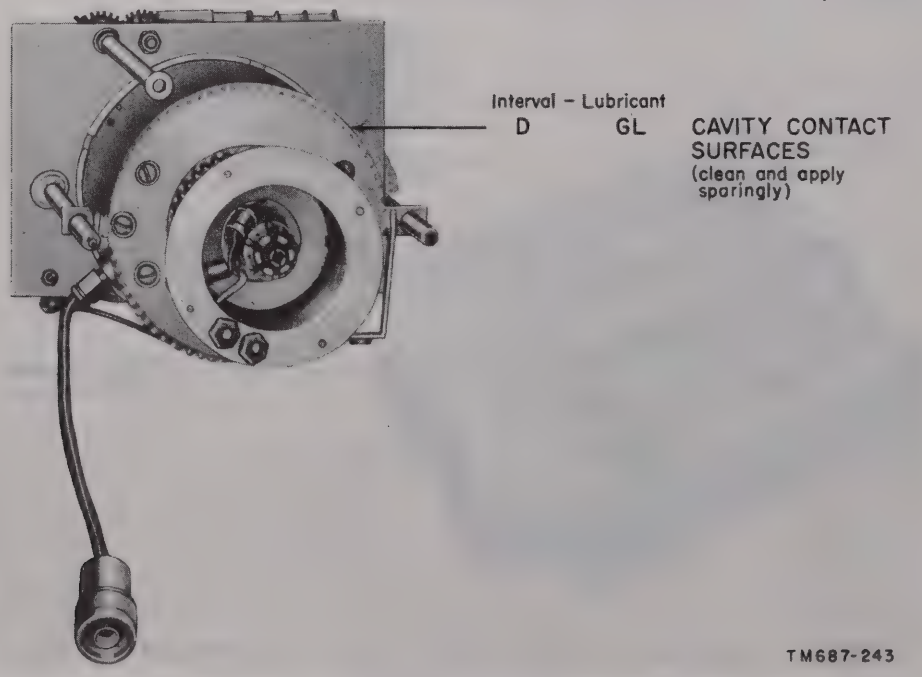

Figure 108. Lubrication of Radio Frequency Amplifier-Multiplier AM–915/TRC shorting plunger, disassembled.

Lubricant	Interval
PL–OIL, Lubricating, Special or MIL–L–6085A. All temperatures	A—1 year.

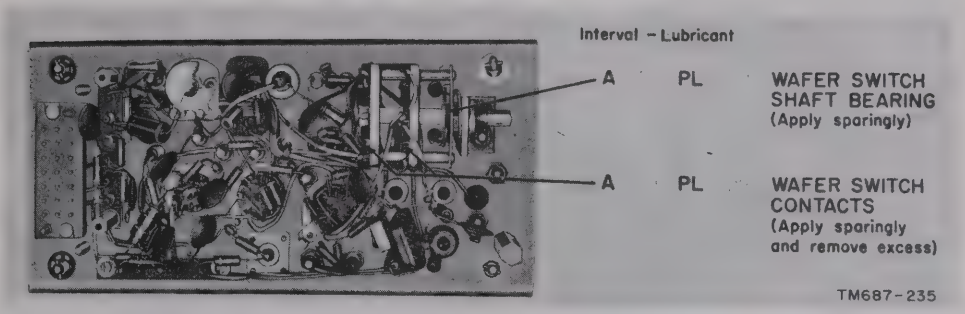

Figure 109. Lubrication of crystal-oscillator assembly.

Lubricant	Interval
PL–OIL, Lubricating, Special or MIL–L–6085A. All temperatures GL–GREASE, Aircraft and Instruments (MIL–G–3278). All temperatures.	A—1 year. T—3 years. D—Dismantling.

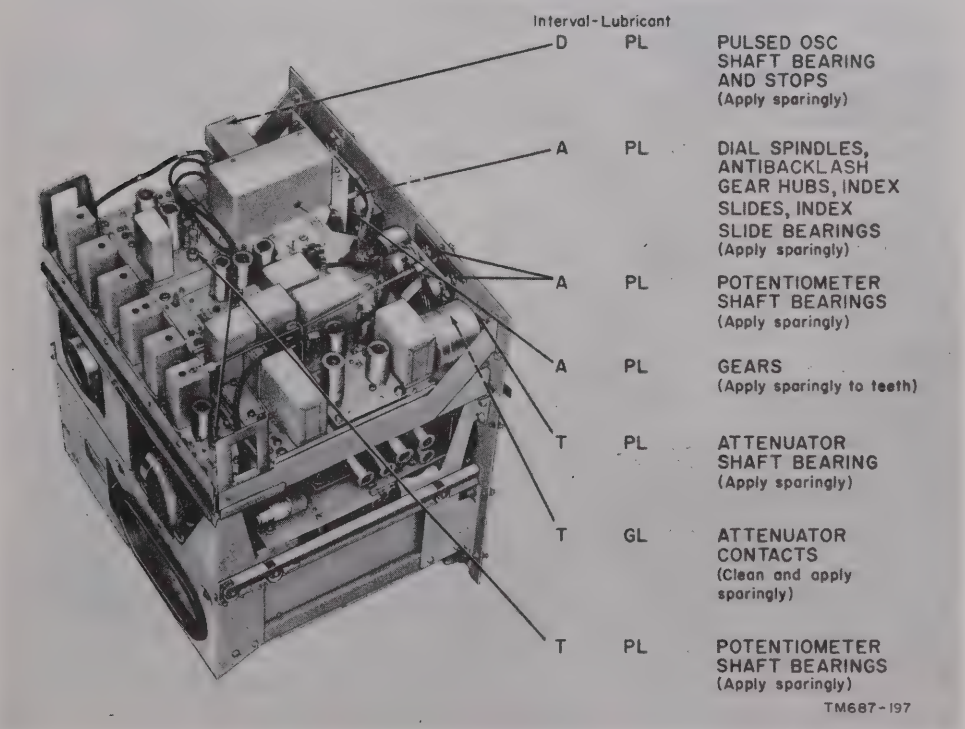

Figure 110. Lubrication of pulsed-oscillator assembly, mounted in transmitter.

Lubricant	Interval
PL–OIL, Lubricating, Special or MIL–L–6085A. All temperatures	A—1 year.

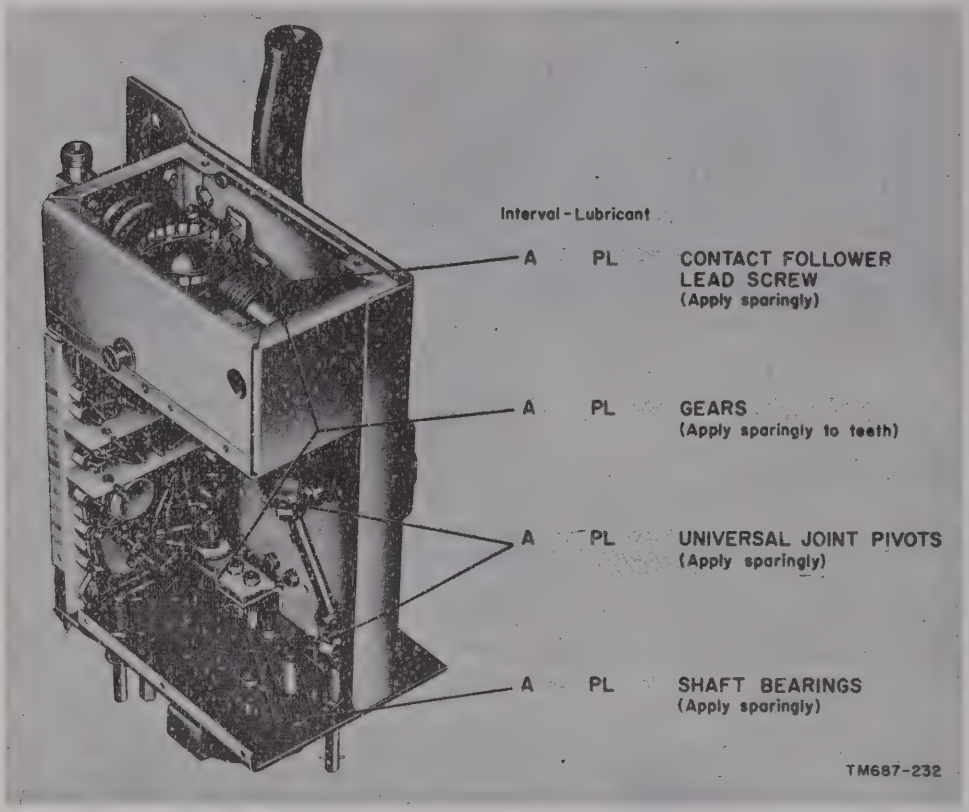

Figure 111. Lubrication of rf exciter assembly, right-rear view, covers removed.

Lubricant	Interval
PL–OIL, Lubricating, Special or MIL–L–6085A. All temperatures GL–GREASE, Aircraft and Instruments (MIL–G–3278). All temperatures.	A—1 year. D—Dismantling.

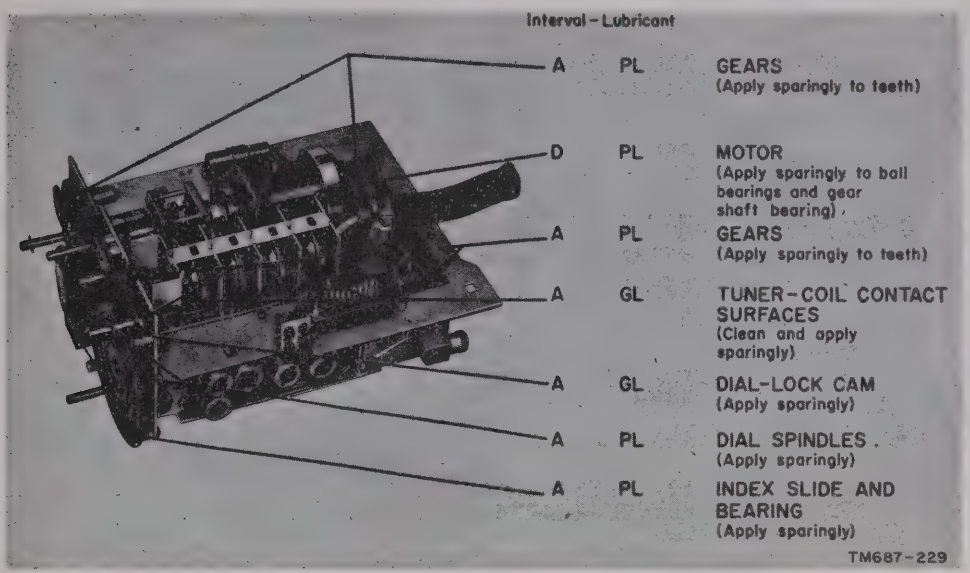

Figure 112. Lubrication of rf exciter, bottom oblique view, covers removed.

Lubricant	Interval
PL–OIL, Lubricating, Special or MIL–L–6085A. All temperatures	A—1 year.

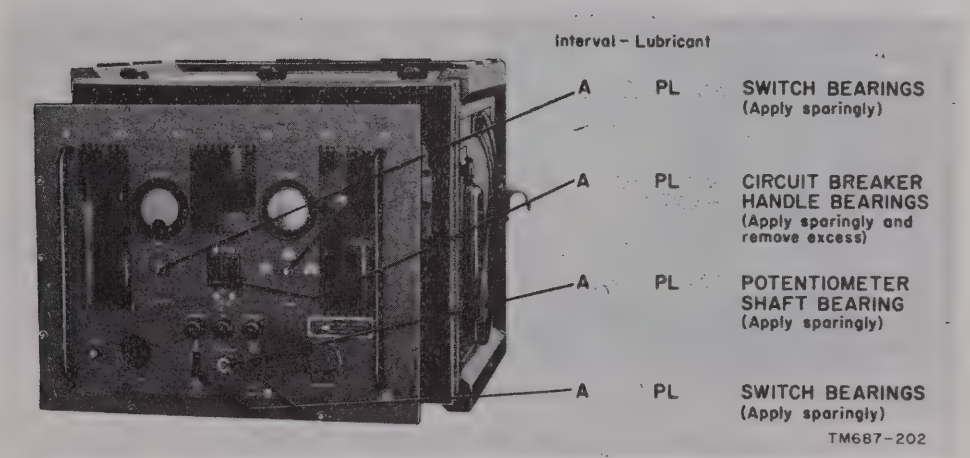

Figure 113. Lubrication of Power Supply PP–685/TRC, front panel controls.

Lubricant	Interval
PL–OIL, Lubricating, Special or MIL–L–6085A. All temperatures	A—1 year.

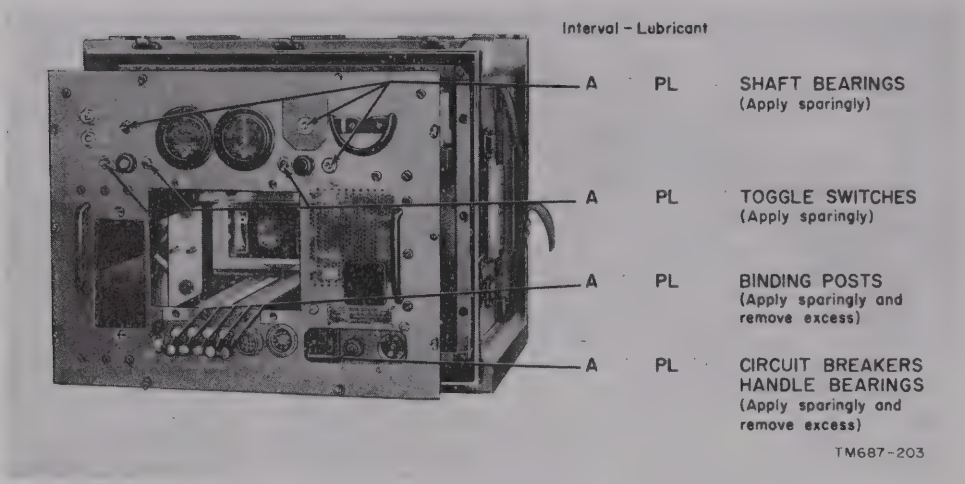

Figure 114. Lubrication of receiver front-panel controls.

Lubricant	Interval
PL–OIL, Lubricating, Special or MIL–L–6085A. All temperatures GL–GREASE, Aircraft and Instruments (MIL–G–3278). All temperatures.	A—1 year.

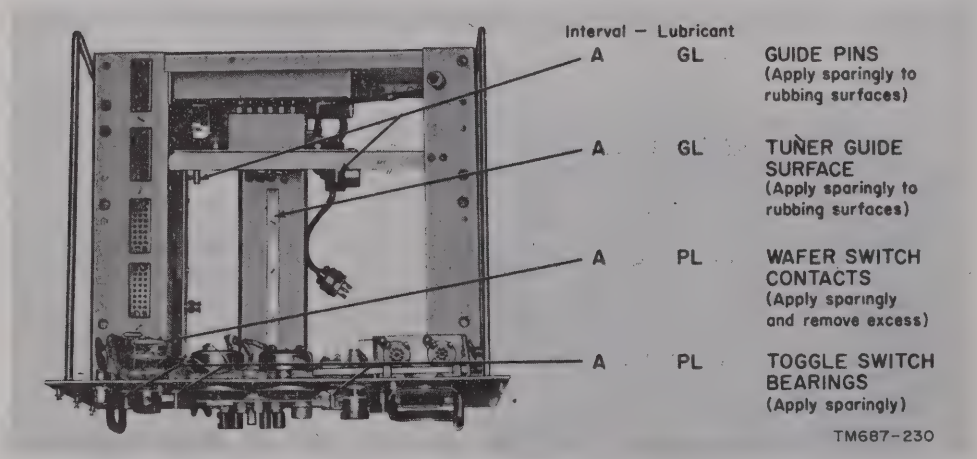

Figure 115. Lubrication of receiver chassis.

Lubricant	Interval
PL–OIL, Lubricating, Special or MIL–L–6085A. All temperatures GL–GREASE, Aircraft and Instruments (MIL–G–3278). All temperatures.	A—1 year. T—3 years.

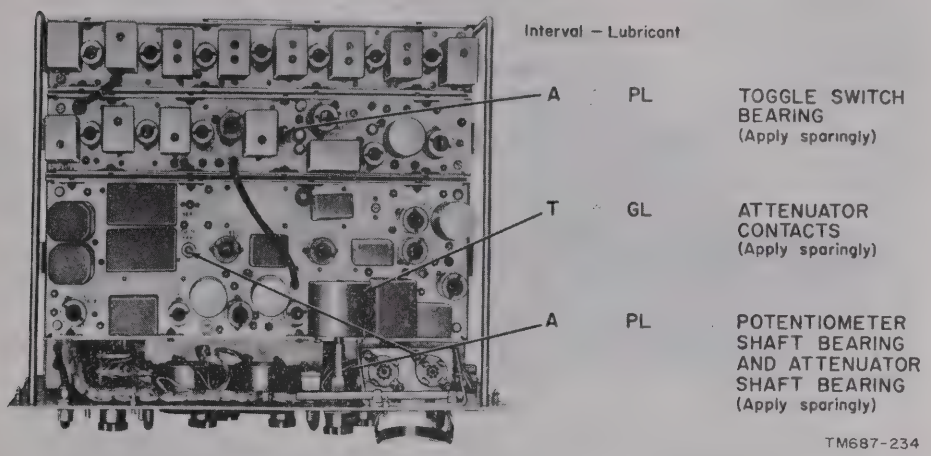

Figure 116. Lubrication of receiver base-band amplifier.

Lubricant	Interval
PL–OIL, Lubricating, Special or MIL–L–6085A. All temperatures GL–GREASE, Aircraft and Instruments (MIL–G–3278). All temperatures.	D—Dismantling.

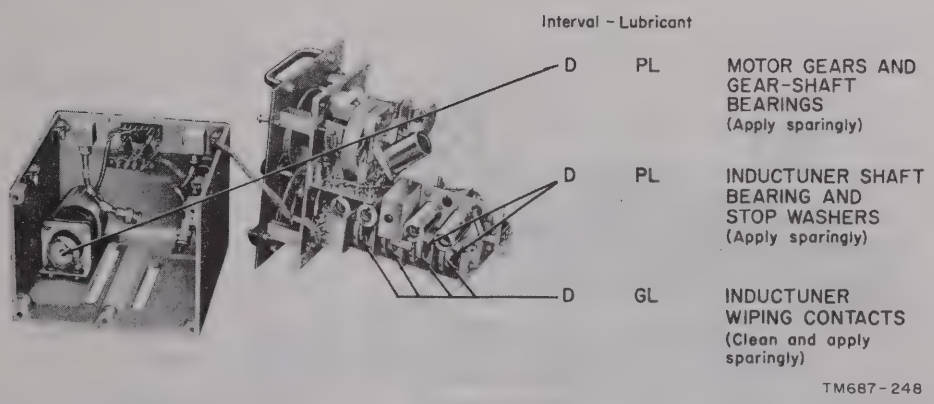

Figure 117. Lubrication of Amplifier-Converter AM–914/TRC, right-side view.

Lubricant	Interval
PL–OIL, Lubricating, Special or MIL–L–6085A. All temperatures	A—1 year.

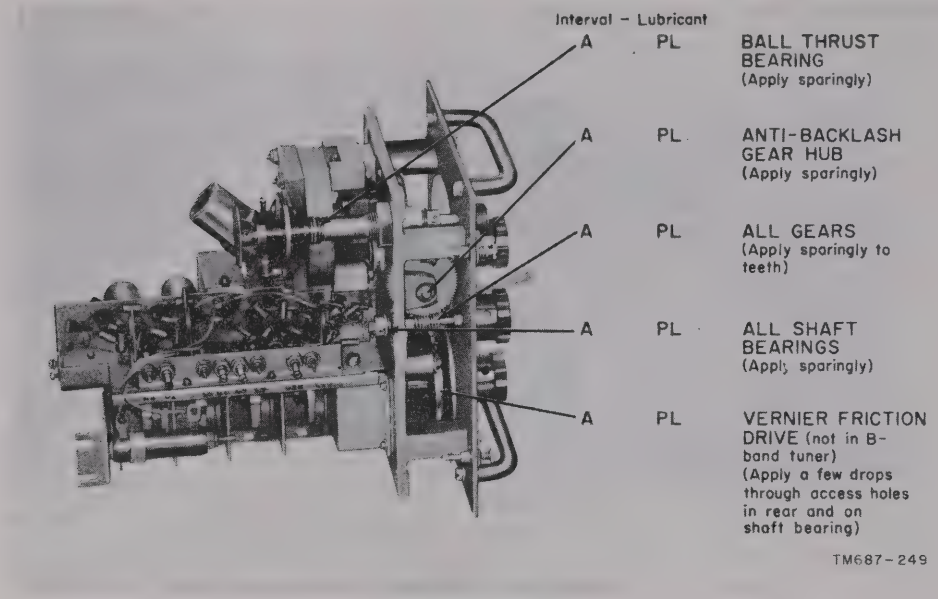

Figure 118. Lubrication of Amplifier-Converter AM–914/TRC, left-side view.

Lubricant	Interval
PL–OIL, Lubricating, Special or MIL–L–6085A. All temperatures GL–GREASE, Aircraft and Instruments (MIL–G–3278). All temperatures.	A—1 year.

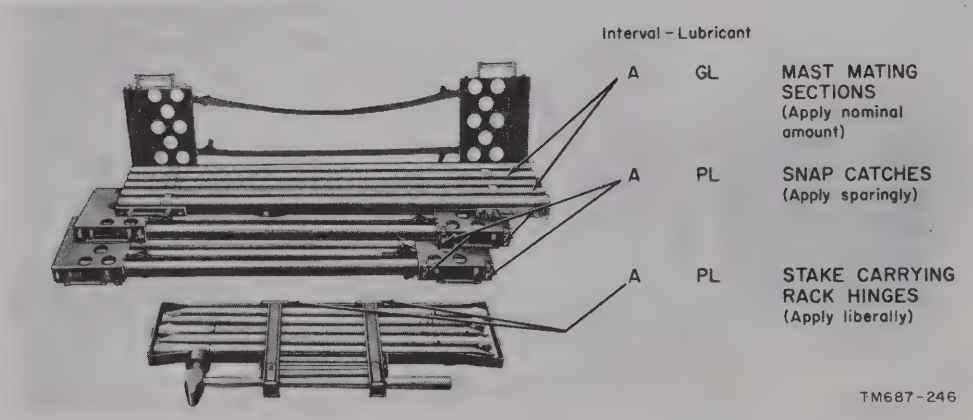

Figure 119. Lubrication of antenna mast sections.

Lubricant	Interval
PL–OIL, Lubricating, Special or MIL–L–6085A. All temperatures GL–GREASE, Aircraft and Instruments (MIL–G–3278). All temperatures.	A—1 year.

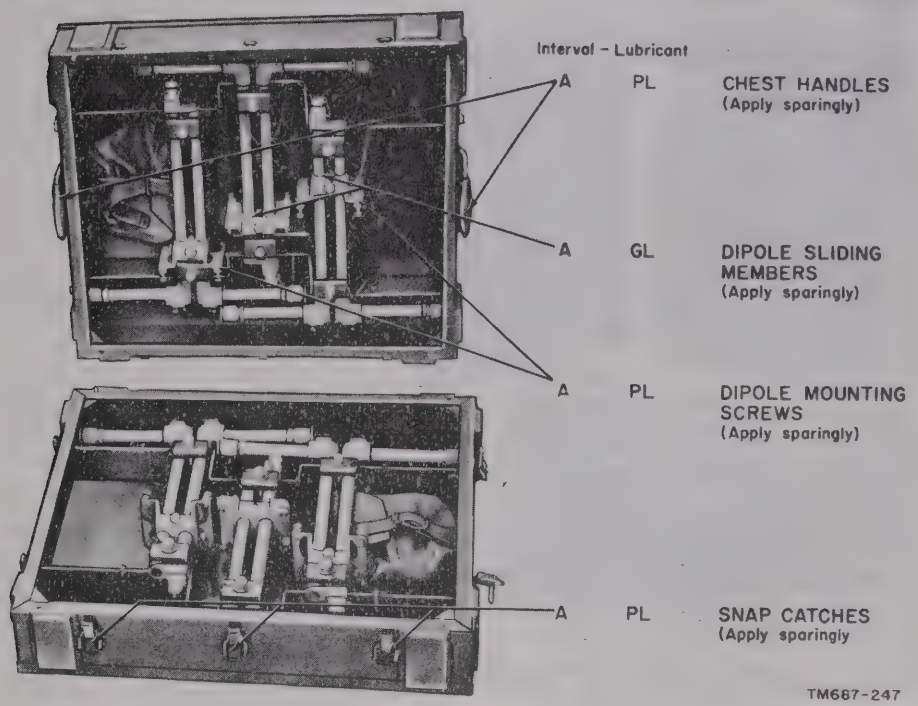

Figure 120. Lubrication of transmitter and receiver antennas.

Lubricant	Interval
PL–OIL, Lubricating, Special or MIL–L–6085A. All temperatures	A—1 year.

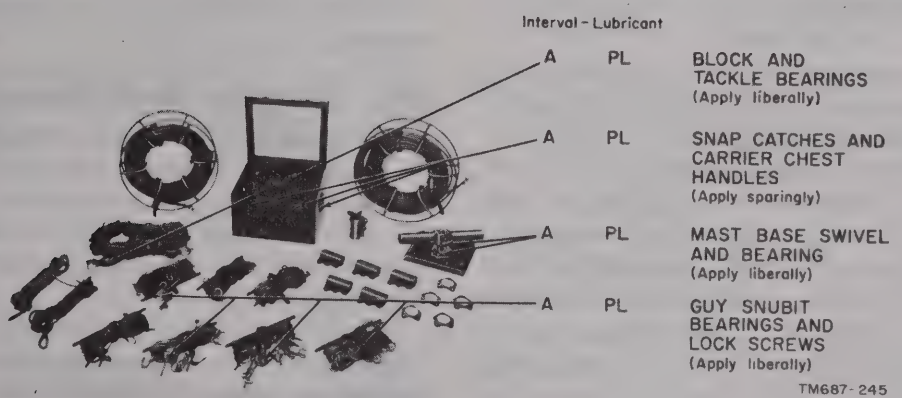

Figure 121. Lubrication of mast and guy equipment.

Lubricant	Interval
PL–OIL, Lubricating, Special or MIL–L–6085A. All temperatures	A—1 year.
GL–GREASE, Aircraft and Instruments (MIL–G–3278). All temperatures.	T—3 years.

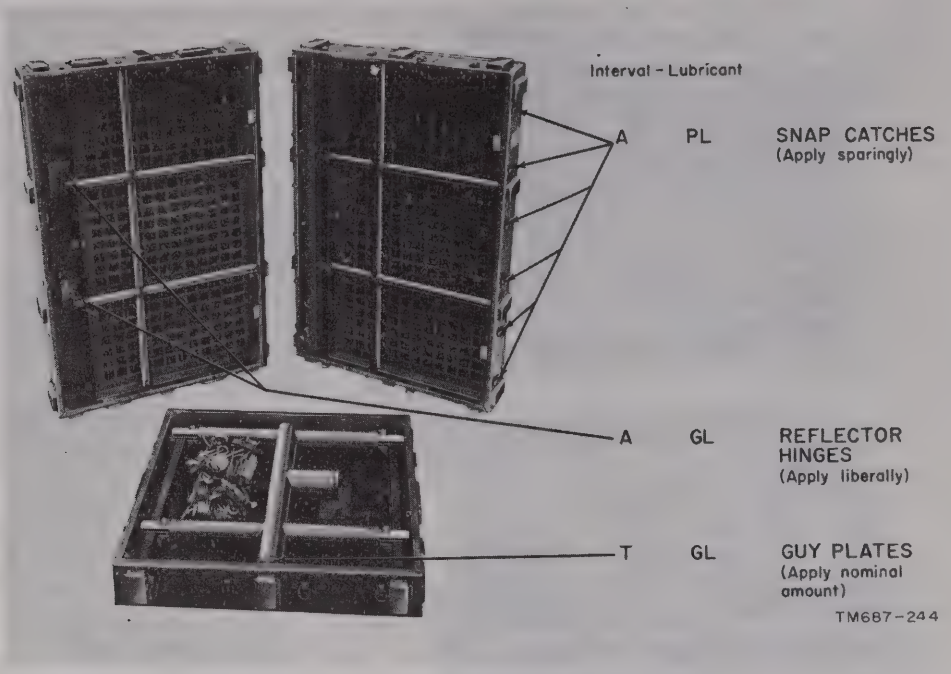

Figure 122. Lubrication of antenna reflector.

(2) Alternate lubrication instructions for the power supply are listed in figure 113.

(3) Alternate lubrication instructions for the receiver are listed in figures 114 through 118. Lubrication requirements for parts in the B-band tuner are the same as the C-band tuner (figs. 117 and 118).

(4) Alternate lubrication instructions for the antenna components are listed in figures 119 through 122.

c. Disassembly for Lubrication.

(1) For lubrication of front-panel controls, it is necessary to remove the front-panel knobs (par. 155*b*).

(2) For all other lubrication procedures, it is necessary to perform a partial or complete disassembly (pars. 155–174).

(3) Lubrication of the transmitter rf tuners requires a complicated disassembly and should not be attempted by organizational maintenance personnel (pars. 337 and 338).

140. Parts Lubricated by Manufacturer

All of the parts of the AN/TRC–24 that require lubrication have been lubricated by the manufacturer. New equipment does not require additional lubrication under ordinary circumstances.

141. Lubrication Under Unusual Conditions

a. General. The useful temperature range of the lubricants used in the AN/TRC–24 is —65° to 250°F. Because of the wide range, the same lubricants used for normal conditions can be used for extreme weather and climate conditions.

b. Arctic Regions. Lubricants, although satisfactory at moderate temperatures, stiffen and solidify at subzero temperatures; as a result, moving parts bind or become inoperative. Consult lubrication orders for the proper grade of lubricant for operating the equipment. When

preparing the equipment for low-temperature operation, see that the lubricants used for moderate temperatures are thoroughly removed. Even small amounts of such lubricants, if allowed to remain, may impair the operation of moving parts. Be sure to use the lubricant specified in the lubrication orders.

c. Tropical Regions. High temperatures and moisture due to rain, condensation, etc., may cause lubricants that are satisfactory at normal temperatures to flow from moving parts and other surfaces. Bearings will wear excessively, and hinges, fasteners, and other parts will be damaged or destroyed by rust and corrosion. Inspect the equipment daily and lubricate it as required to insure efficient operation using lubricants suitable for high temperatures.

d. Desert Regions. Dust and sand infiltration into the equipment will seriously impair and damage the moving parts of the set. High temperatures and lack of humidity cause the lubricants to flow from moving parts. Use lubricants suitable for high temperatures. Inspect and clean the equipment daily.

142. Weatherproofing

a. General. Signal Corps equipment, when operated in tropical, arctic, and desert regions, requires special treatment and maintenance. Fungus growths, insects, dust, corrosion, salt spray, excessive moisture, and extreme temperatures are harmful to most materials. Some of the problems encountered are—

(1) Resistors, capacitors, coils, and crystals fail because of the effects of fungus growths and excessive moisture.

(2) Electrolytic action, often visible in the form of corrosion, takes place in resistors and coils, causing eventual breakdown.

(3) Hook-up wire insulation and cable insulation breakdown. Fungus growth accelerates deterioration.

(4) Moisture forms electrical leakage paths on terminal boards and insulating strips, causing flash-overs.

b. Tropical Maintenance. A special moistureproofing and fungiproofing treatment has been devised which, if properly applied, provides a reasonable degree of protection against fungus growth, insects, corrosion, salt spray, and excessive moisture. This treatment is explained in TB SIG 13, Moistureproofing and Fungiproofing Signal Corps Equipment, and TB SIG 72, Tropical Maintenance of Ground Signal Equipment.

c. Winter Maintenance. Special precautions necessary to prevent poor performance or total operational failure of equipment in extreme low temperatures are explained in TB SIG 66, Winter Maintenance of Signal Equipment, and TB SIG 219, Operation of Signal Equipment at Low Temperatures.

d. Desert Maintenance. Special precautions necessary to prevent equipment failure in areas subject to extremely high temperatures, low humidity, and excessive sand and dust are explained in TB SIG 75, Desert Maintenance of Ground Signal Equipment.

e. Lubrication. The effects of extreme cold and heat on materials and lubricants are explained in TB SIG 69, Lubrication of Ground Signal Equipment. Observe all precautions outlined in the bulletin and all lubrication orders when operating equipment under extreme conditions of humidity, heat, and cold.

143. Moistureproofing and Fungiproofing After Repairs

If, during repair, the coating of protective varnish has been punctured or broken, and if complete treatment is not required to reseal the equipment, apply a brush coat to the affected part. Use Lacquer, fungi-resistant. Be sure that the break is completely sealed.

144. Rustproofing and Painting

When the finish on the transit case has been badly scarred or damaged, rust and corrosion can be prevented by touching up bared surfaces as follows:

a. Use No. 000 sandpaper to clean the surface down to the bare metal. Obtain a bright, smooth finish.

Caution: Do not use steel wool. Particles of steel might enter the case and cause grounding and shorting of circuits.

b. When a touch-up job is necessary, apply the paint with a small brush. When numerous scars and scratches require complete repainting, remove the radio chassis. Remove rust from the case by cleaning corroded metal with solvent (SD). In severe cases, it may be nec-

essary to use solvent (SD) to soften the rust, and use sandpaper to complete the preparation for painting. Use paint authorized and consistent with existing regulations. Refer to TM 9–2851, Painting Instructions for Field Use.

Section IV. GENERAL TROUBLESHOOTING PROCEDURES

145. Organizational Maintenance Troubleshooting

a. Troubleshooting and repair may be performed either at the organizational or the field maintenance level. Organizational troubleshooting is performed by the attendant at the radio station. Field troubleshooting is performed by field maintenance personnel. Information concerning field maintenance is given in paragraphs 309 through 379.

b. The troubleshooting and repair that can be performed at the organizational maintenance level is limited in scope by the tools, test equipment, and replaceable parts issued and by the existing tactical situation. If a repairman at the organizational level has the necessary ability, tools, and replacement parts, the equipment should be repaired. If it is not possible to repair the equipment at the organizational maintenance level, the trouble should be referred to the repairman at the field maintenance level.

c. The paragraphs in this section outline the procedures for troubleshooting and repair of the AN/TRC–24 and associated equipment that are normally performed at the organizational maintenance level. If the organizational maintenance repairman has the necessary skill, he should refer to the field maintenance instructions (*a* above) for additional troubleshooting information.

146. Reference Symbol Numbers

a. Circuit elements in the transmitter and the receiver have been assigned reference numbers over 100. Although a circuit element in the transmitter and a circuit element in the receiver bear the same reference number (such as FL101), they do not necessarily have the same electrical value or physical appearance.

b. Circuit elements in components of Radio Set AN/TRC–24, other than the transmitter and receiver, have been assigned reference numbers under 100. Although a circuit element in one component bears the same reference number as a circuit element in another component (such as T1), they do not necessarily have the same electrical value or physical appearance.

147. General Precautions

Whenever the transmitter is being serviced, observe the following precautions:

a. Be careful when the transmitter or the power supply is removed from the transit case. Dangerous voltages are exposed.

b. Careless replacement of parts often makes new faults. Observe the following points:

(1) Be careful not to bend the pins of miniature-type tubes. If the pins are bent, use the tube-pin straightener located on the receiver chassis to straighten them.

(2) In some rf exciter units, the shields of tubes V105 through V109 (fig. 127) are each marked with an arrow and the chassis is marked with a dot near the tube socket. When replacing the shields in these units, be sure that the arrow is near the dot. This insures that the tube shields are always replaced the same way and prevents possible mistuning of the critical rf circuits of the exciter as a result of tube replacement.

(3) Before a part is unsoldered, note the position of the leads. If the part, such as a transformer or filter, has many leads, tag each lead and note its connection.

(4) Do not allow drops of solder to fall into the set; they may cause short circuits.

(5) Be careful not to damage leads or circuit elements near the soldering iron.

(6) A carelessly soldered connection may create a new fault. It is very important to make well-soldered joints since a poorly soldered joint is one of the most difficult faults to find.

(7) Do not attempt to replace parts in the rf and if. circuits that require realinement of the circuit after the part is replaced. Such replacement should be done at field maintenance installations where the required alinement equipment is available.

148. Checking B+ Circuits for Shorts

If the circuit breakers of the receiver or the power supply open, check the receiver or transmitter for a short from B+ to ground.

a. Checking B+ Circuits of Receiver for Shorts. If circuit breaker CB101 of the receiver opens, check the receiver for a B+ short before applying power again. Follow the procedure outlined in (1) through (7) below to localize a B+ short.

(1) Observing ohmmeter polarity, connect an ohmmeter between jacks J130 and J128 of the receiver power supply. Allow sufficient time for the ohmmeter to charge the electrolytic filter capacitors and the ohmmeter needle to become steady. If the B+ circuit is normal, the meter should read approximately 10,000 ohms with a C-band tuner installed and approximately 3,000 ohms with a B-band tuner.

(2) If the meter reading is below normal, remove the plug-in assemblies from the receiver one at a time while observing the reading on the ohmmeter. When the assembly with the B+ short is removed, the ohmmeter reading will rise suddenly.

(3) Connect the ohmmeter between terminals 5 and 1 of the 21-pin connector of the defective plug-in assembly.

(4) Remove the tubes from the assembly one at a time while observing the ohmmeter reading. A sudden increase indicates that a shorted tube was removed.

(5) If the tubes are not shorted, check for a shorted capacitor between the B+ line and ground.

(6) If a shorted capacitor is located, also check the resistors between the B+ line and the shorted capacitor for charring and for increased value.

b. Checking Transmitter +150-volt Supply for Shorts. If circuit breaker CB3 or 150V DC fuse F3 opens, follow the procedure outlined in (1) through (6) below to check the transmitter for shorts before closing the circuit breaker or replacing the fuse.

Warning: Discharge all high-voltage capacitors in the transmitter with the shorting stick (par. 133) before taking any transmitter measurements.

(1) Connect an ohmmeter between jacks J14 and J5 of Power Supply PP–685/TRC while the power supply is connected to the transmitter.

(2) Remove the low-voltage assembly from the power supply. If the short disappears (as indicated by an increased ohmmeter reading) when the low-voltage assembly is removed, the trouble is probably in the transmitter. If the short does not disappear when the low-voltage assembly is removed, remove the tubes of the low-voltage assembly until the short disappears.

(3) If the short is not in the low-voltage assembly, remove the interconnecting cable from TRANSMITTER jack J3 and connect the ohmmeter to terminals M and S of the interconnecting cable.

(4) Remove the plug-in assemblies of the transmitter one at a time. When the defective assembly is removed, the short will disappear.

(5) Connect the ohmmeter between the +150-volt terminal and ground connection of the 21-pin connector of the defective unit and remove the tubes of that unit one at a time until the short disappears.

(6) If the short still does not disappear, check the +250-volt supply for shorts (*c* below).

c. Checking +250-volt Transmitter Circuit for Shorts. Follow the same procedure outlined in *b* above but connect the ohmmeter to jacks J16 and J5 of the power supply and between terminals T and S of POWER SUPPLY jack J141.

d. Checking the +750-volt Circuit of Transmitter for Shorts. If circuit breaker CB2 should open, follow the procedure outlined in (1) through (5) below to check the +750-volt

circuit for shorts before applying power again.

Warning: Discharge all high-voltage capacitors in the transmitter with the shorting stick (par. 133) before taking any transmitter measurements.

(1) Disconnect the cable from TRANSMITTER jack J3 of the power supply.
(2) Connect an ohmmeter to terminals H and N of jack J3. The ohmmeter reading should be 38,300 ohms.
(3) Check tubes V1, V2, V3, V4 for shorts with the tube tester. If the ohmmeter reading is too low ((2) above) or if the tubes are defective, the trouble probably exists in the power supply. If the ohmmeter reading and tubes are normal, the trouble probably exists in the transmitter driver or rf tuner stages.
(4) Connect the ohmmeter to terminals H and N of POWER SUPPLY jack J141 of the transmitter. If there is no short, the ohmmeter should read ∞. If it does, check the +275-volt supply for shorts (*e* below).
(5) If the ohmmeter reading is low ((4) above), remove the rf tuning unit and the driver assembly from the transmitter one at a time. When the defective unit is removed, the ohmmeter reading will increase.

e. Checking +275-volt (+200 to 350 Volts) Transmitter Circuit for Shorts. If circuit breaker CB2 opens and the +750-volt circuit is not shorted (*d* above), follow the procedure outlined in (1) through (4) below to check the +275-volt circuit for shorts.

Warning: Discharge all high-voltage capacitors in the transmitter with the shorting stick (par. 133) before taking any transmitter measurements.

(1) Connect an ohmmeter to terminals U and N of TRANSMITTER jack J3 of the power supply. The normal ohmmeter reading is 350,000 ohms.
(2) If the ohmmeter reading is low, check tubes V2 and V4 of the power supply for shorts with the tube checker.
(3) If the ohmmeter reading is normal, the short is in the transmitter and probably in the transmitter rf tuner. Connect the ohmmeter to terminals U and N of POWER SUPPLY jack J141 of the transmitter. The ohmmeter should read 57,000 ohms.
(4) If the ohmmeter reading is low, remove the rf tuner from the transmitter. If the short disappears (as indicated by an ohmmeter reading of ∞), the short is in the rf tuner.

149. Removal and Replacement of Tube 4X–150A from Radio Frequency Amplifier-Multiplier AM–915/TRC

a. Removal.

(1) Remove the rf tuner from the transmitter (par. 165).
(2) Rotate the insulated tube retainer so that it will not obstruct the top of the tube.
(3) Squeeze the prongs of the tube puller together (fig. 123) until they are the same distance apart as the slots at the sides of the tubes.

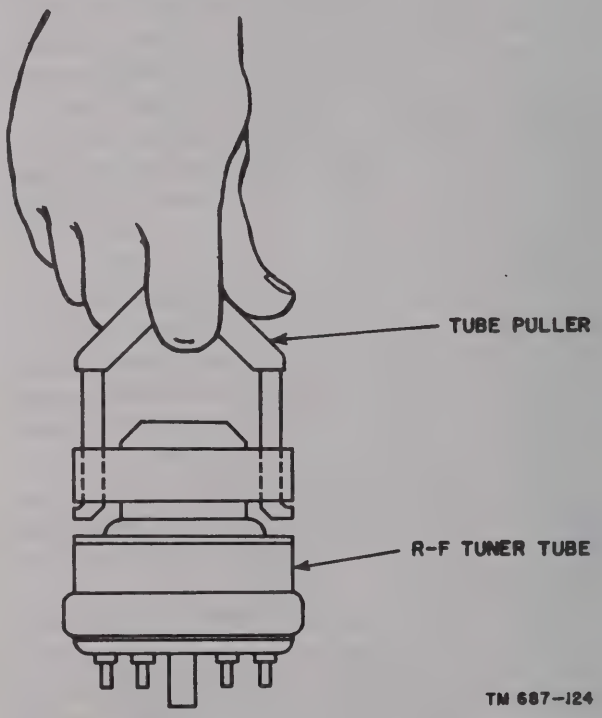

Figure 123. Use of tube puller.

(4) Push the prongs of the tube puller into the slots at the sides of the tube until the prong lips are behind the plate ring of the tube. Be careful not to bend the cooling fins of the tube when inserting the tube puller.
(5) Pull the tube out using a tube puller.

b. Replacement.

(1) Position a replacement tube so that the key projection (tube grid) is alined with the slot in the tube socket.

(2) Press the tube into the socket with an even pressure after it is certain that the tube is properly positioned. *Do not rotate the tube after the key has been positioned.*

(3) Rotate the insulated tube retainer until it is positioned over the center of the tube.

150. Removal and Replacement of Tube 4X–150A from Radio Frequency Amplifier AM–912/TRC

a. Removal.

(1) Remove the rf tuner from the transmitter (par. 165).

(2) Remove the eight screws and lockwashers that secure the cover to the rear of the tuner.

(3) Discharge the plate of the tube to chassis ground by using the shorting stick according to the instructions outlined in paragraph 133. The 4X–150A tubes are shown installed in the transmitter rf tuners in figure 124.

(4) Grasp the top of the tube and pull it straight out in line with the center axis of the tube. *Do not rotate the tube.*

b. Replacement.

(1) Position a replacement tube so that the key projection (tube grid) is alined with the slot in the tube socket.

(2) Press the tube into the socket with an even pressure after it is certain that the tube is properly positioned. *Do not rotate the tube after the key has been positioned.*

151. Removal and Replacement of Tube 4X–150G from Radio Frequency Amplifier-Multiplier AM–915/TRC

a. Removal.

(1) Remove the rf tuner from the transmitter (par. 165).

(2) The 4X–150G tube is shown installed in Radio Frequency Amplifier-Multiplier AM–915/TRC in fig. 124. Rotate the insulated tube retainer aside so that it will not obstruct the top of the tube.

(3) Squeeze the prongs of the tube puller together (fig. 123) until the prongs are the same distance apart as the slot at the base of the tube.

(4) Push the prongs of the tube puller into the slots at the sides of the tube until the prong lips are behind the plate ring of the tube.

(5) Pull out the tube by using the tube puller.

b. Replacement.

(1) Push the tube into its socket. It is not necessary to position the tube with a key because the base of the tube engages concentric contact rings in the tube socket.

(2) Rotate the insulated tube retainer until it is positioned over the center of the tube.

152. Tube Testing

(figs. 124–133)

Tube failures are responsible for a large percentage of the failures that occur in the equipment. There are two general methods of testing tubes: testing by substitution and testing with a tube tester. The advantages and limitations of each method are outlined in *a* and *b* below. The tubes for each component are shown as given in *c* below.

a. Testing Tubes by Substitution.

(1) Determine which stage is faulty before replacing any tubes. There are too many tubes in this set to replace tubes indiscriminately.

(2) Note the position of all controls before replacing a tube.

(3) Replace the tube with one known to be good.

(4) Adjust the controls and determine if the fault has been corrected. If the fault has not been corrected, replace the old tube and position the controls to the original position.

Caution: In many circuits, the interelectrode capacitance of a tube is part of a tuned circuit. When tubes are switched, the tuning of the circuits is upset. If too many tube substitutions are made, the set may become seriously misaligned.

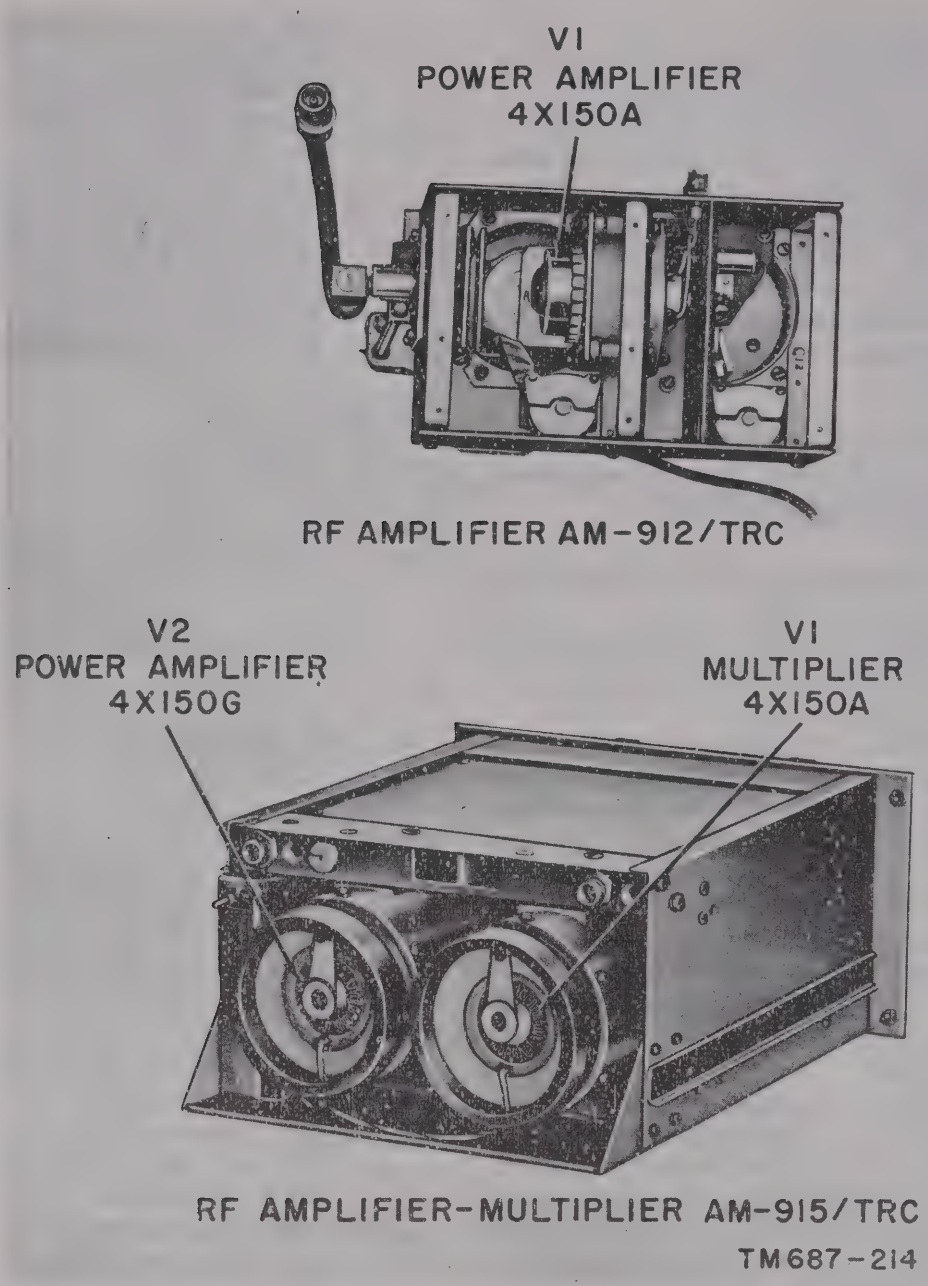

Figure 124. Transmitter rf tuner tube location.

b. Testing Tubes with Tube Tester. Use Electron Tube Test Set TV–7/U to check for shorted elements, cathode emission, and the mutual conductance of small tubes. The tube tester will not test the performance of high-power transmitter tubes or rectifiers. Tube testers, however, are useful for checking receiving tubes. Results obtained from a tube tester are not always conclusive because a tube tester does not always duplicate the actual operating conditions of the radio set. It is possible that a faulty tube will not be detected by a tube tester. Refer to TM 11–5083, Electron Tube Test Set TV–7/U, for operating and maintenance instructions.

c. Location of Tubes. The location of other tubes in the transmitter are shown in figures 125 through 127. Figure 128 shows the loca-

tion of tubes for the power supply, and figures 129 through 133 show the location of tubes for the receiver.

d. Replacement Practice. These are general rules to follow:

(1) Never throw away a tube unless a tube tester shows it to be defective or unless it has some obvious defect, such as a broken glass envelope or broken connecting prong.

(2) Do not discard tubes merely because they have been used for a specified length of time. An old tube may work just as well as a new one; frequently it may work better. *Satisfactory operation in a circuit is the final proof of tube quality.*

(3) Do not discard tubes merely because a tube tester shows them to be near the point of minimum acceptability. Tubes that check at this near limit value may give satisfactory service for a long time.

(4) Be careful when withdrawing a miniature tube from its socket. Do not *rock or rotate* the top of a miniature when removing it; instead pull straight out.

e. Interchangeable Tubes. A preferred type tube, type 5R4WGA, has been developed as a direct replacement for tube type 5R4WGY. These tubes can be used interchangeably in Power Supply PP-685/TRC and in the receiver power supply. The older type should be used until stocks are exhausted.

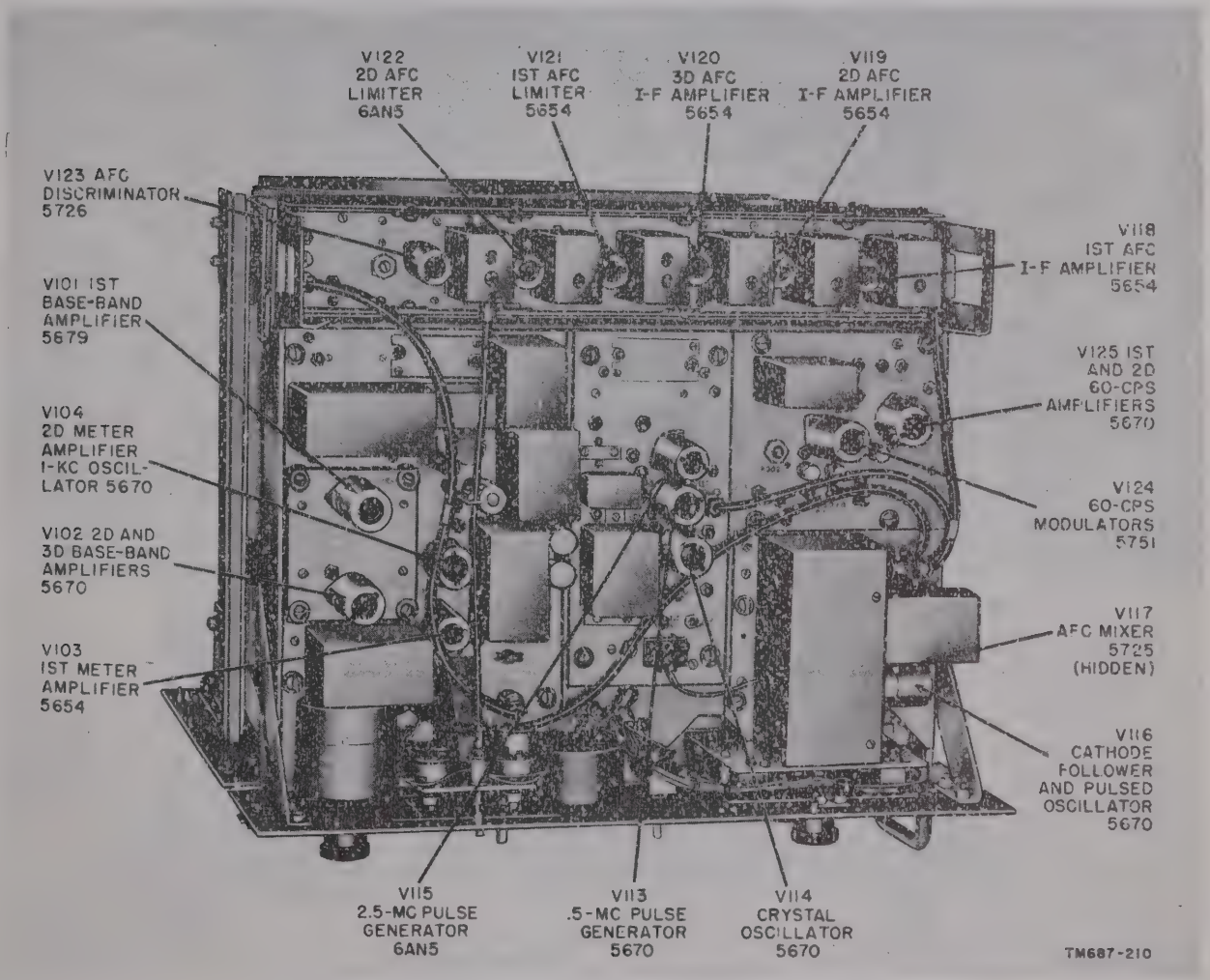

Figure 125. Radio Transmitter T-302/TRC, tube location, top view.

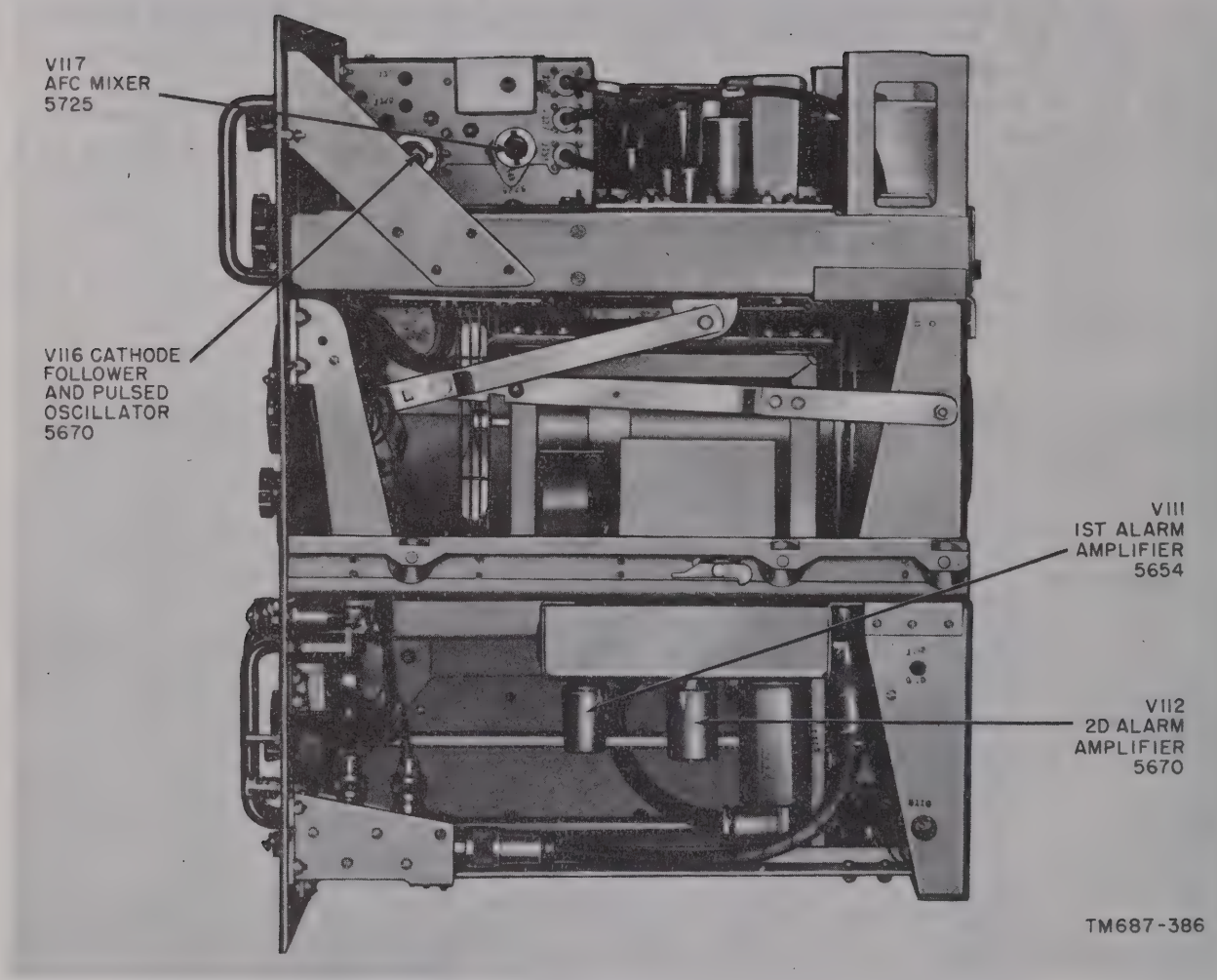

Figure 126. Radio Transmitter T–302/TRC, tube location, right-side view.

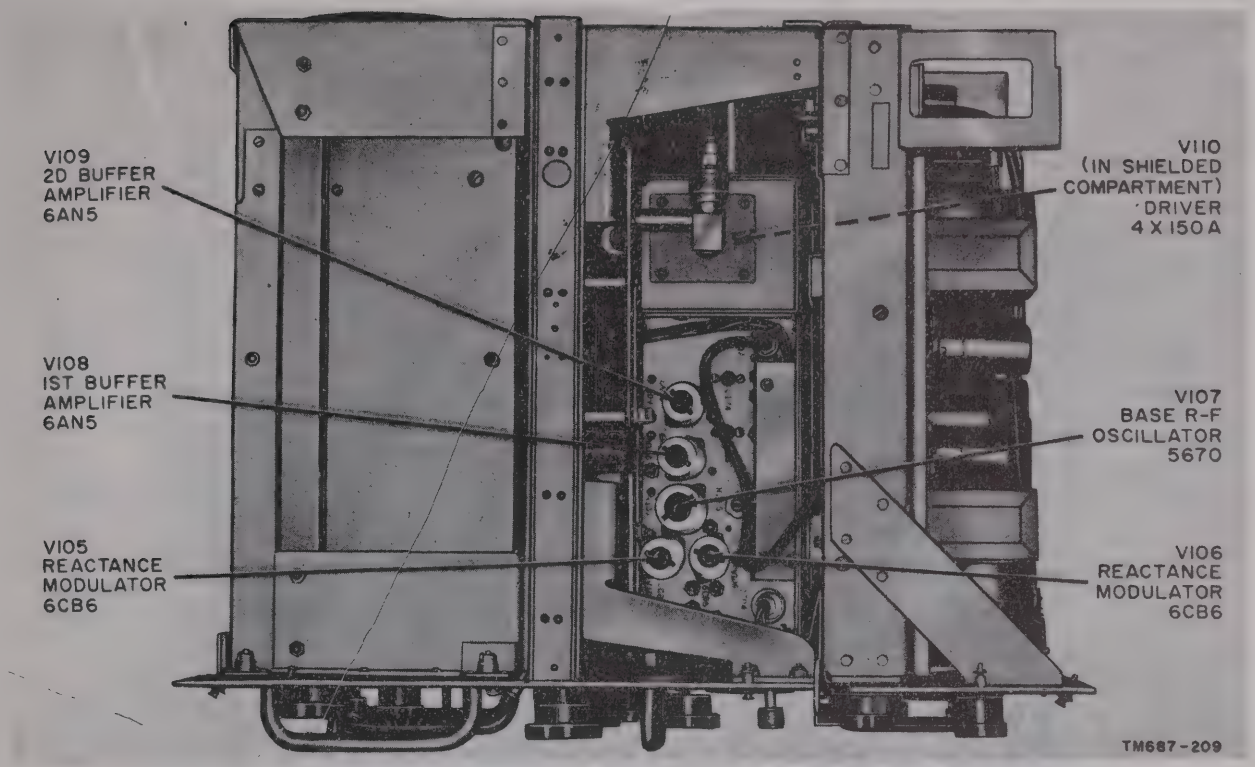

Figure 127. Radio Transmitter T-302/TRC, tube location, left-side view.

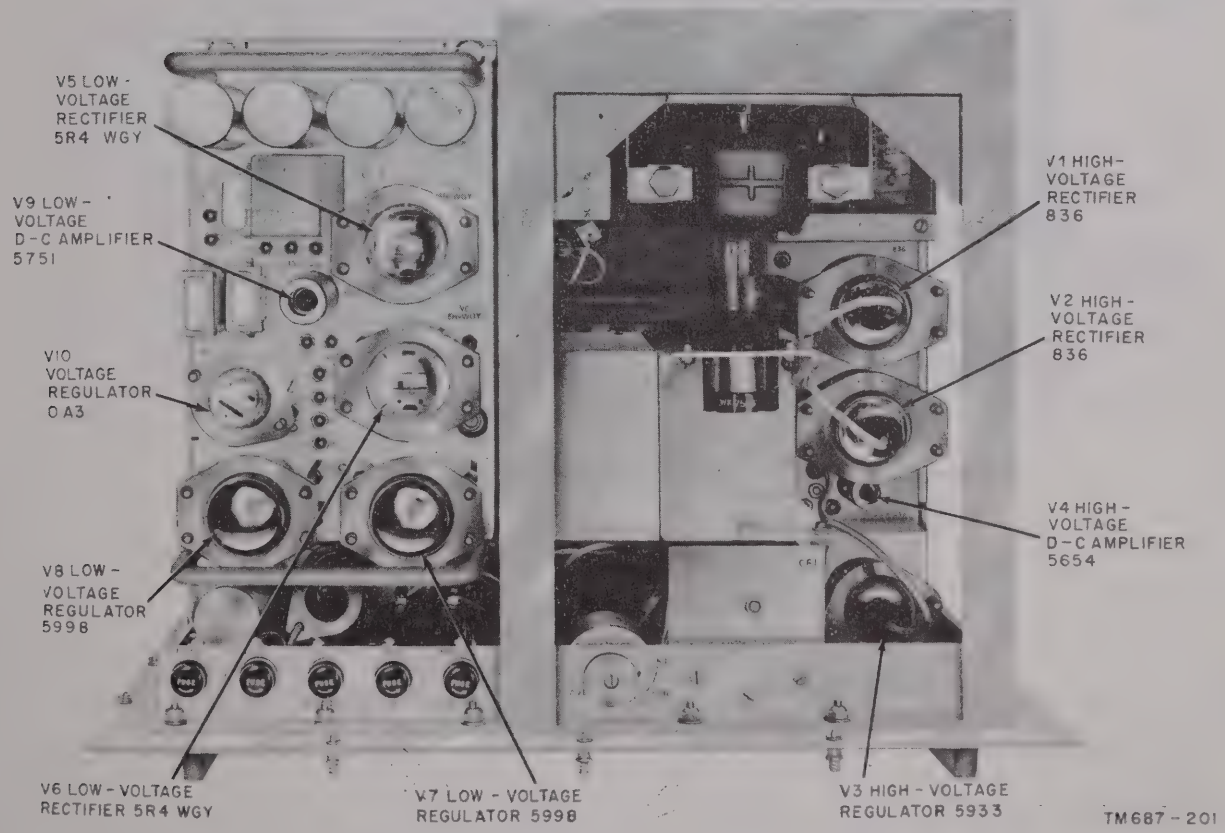

Figure 128. Power Supply PP-685/TRC, tube location.

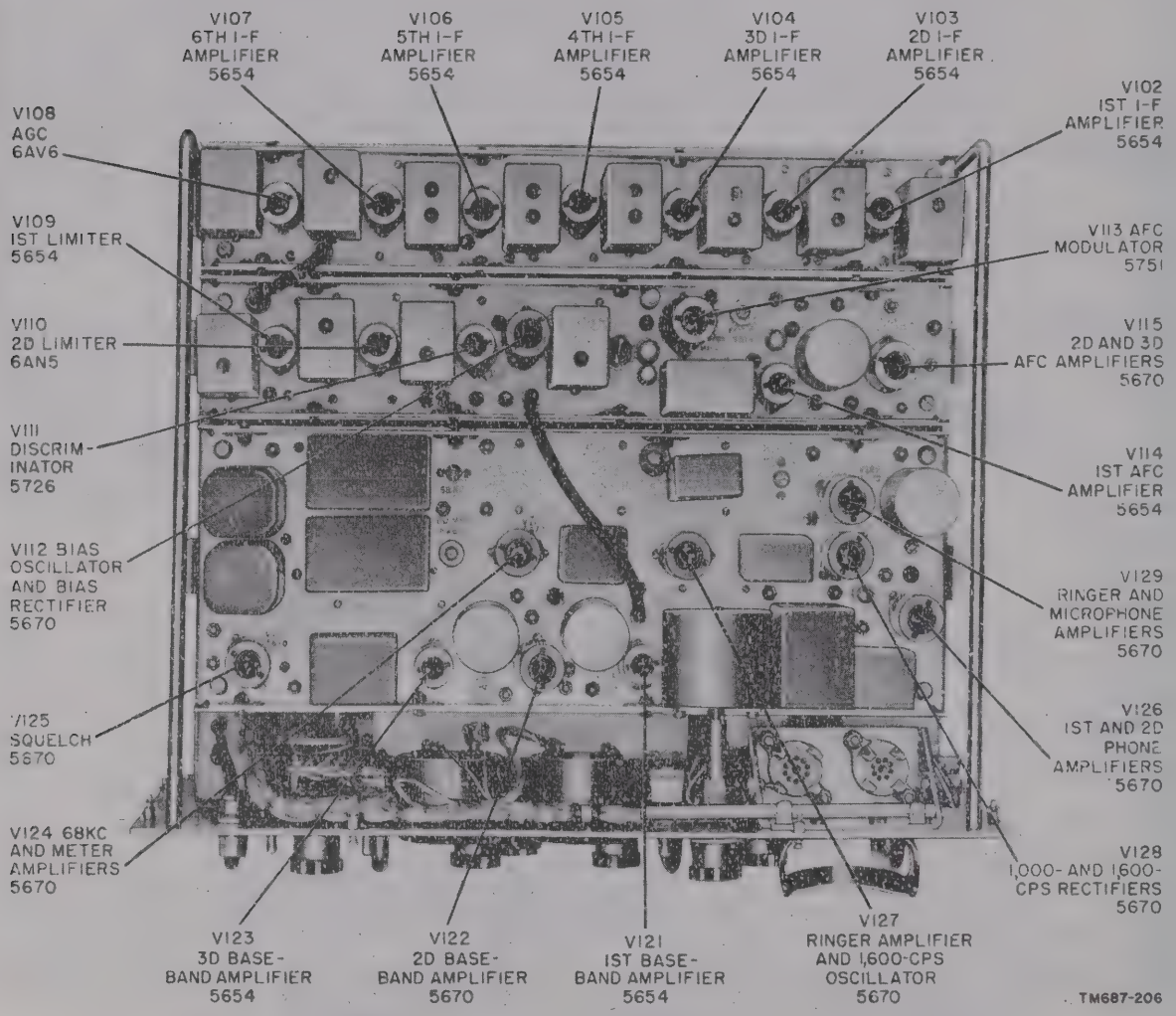

Figure 129. Radio Receiver R-417/TRC, tube location, top view.

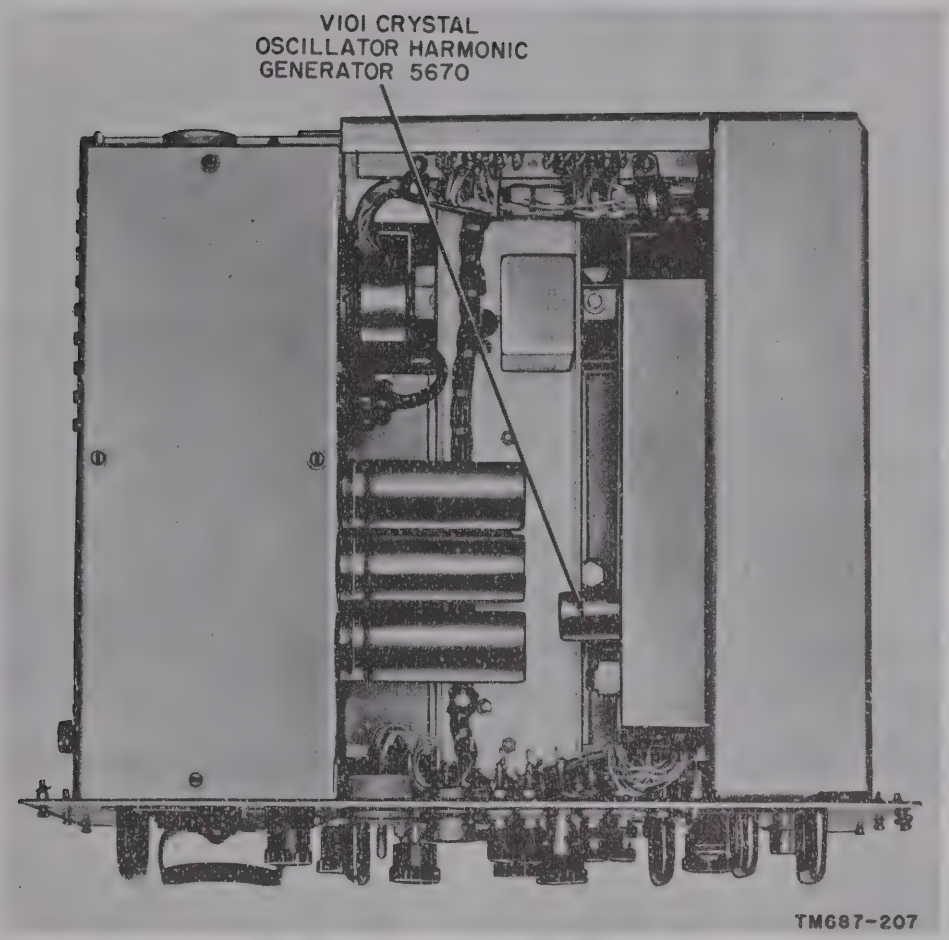

Figure 130. Radio Receiver R-417/TRC, tube location, bottom view.

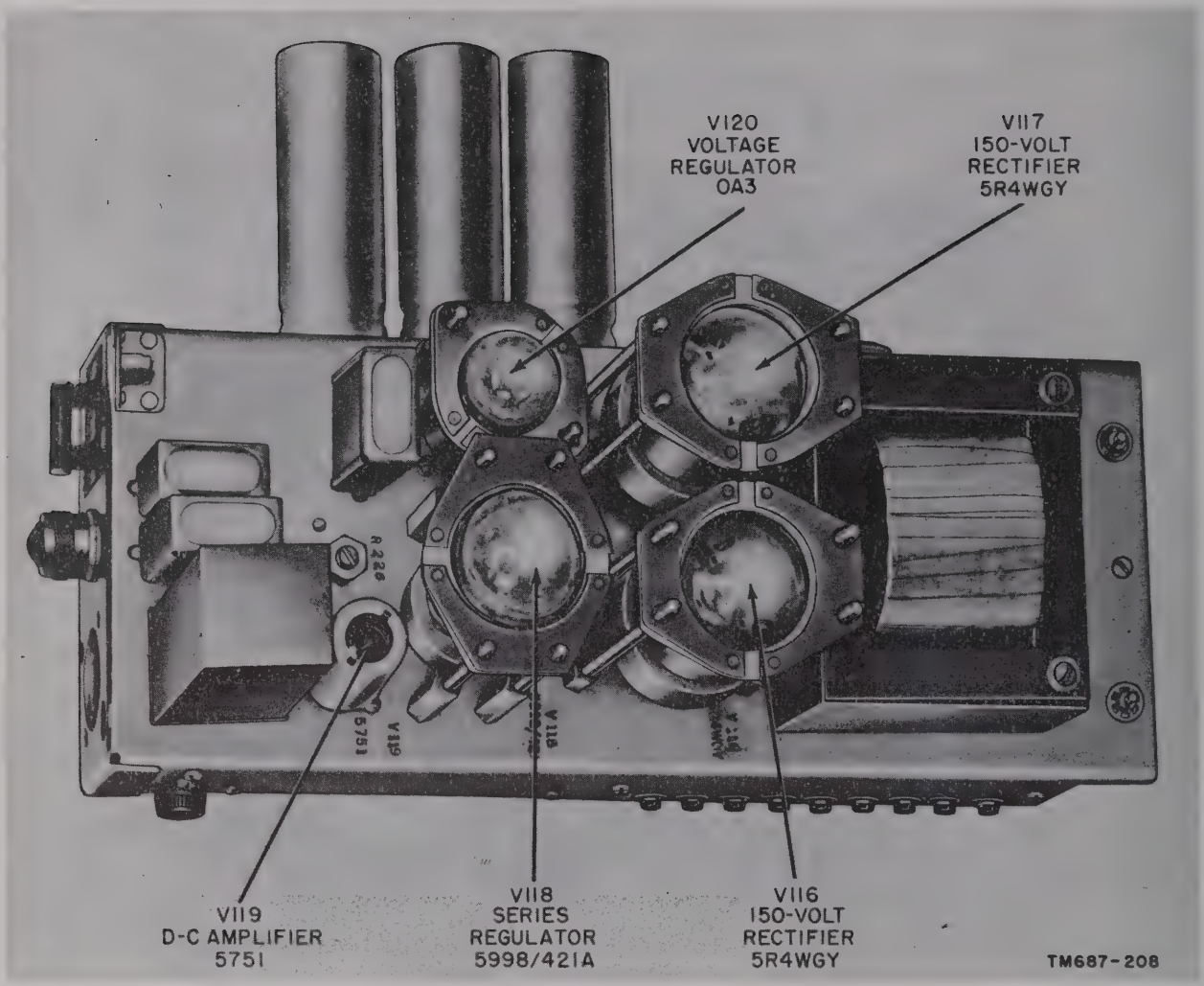

Figure 131. Receiver power supply, tube location.

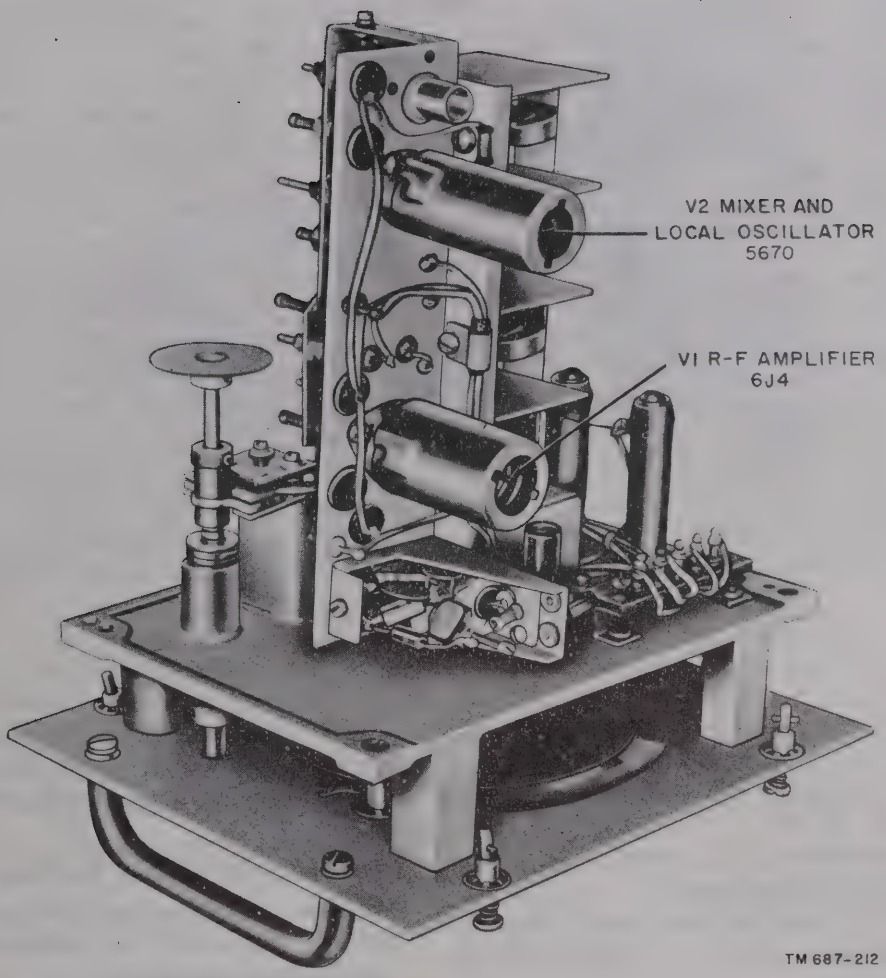

Figure 132. Amplifier-Converter AM-913/TRC, tube location.

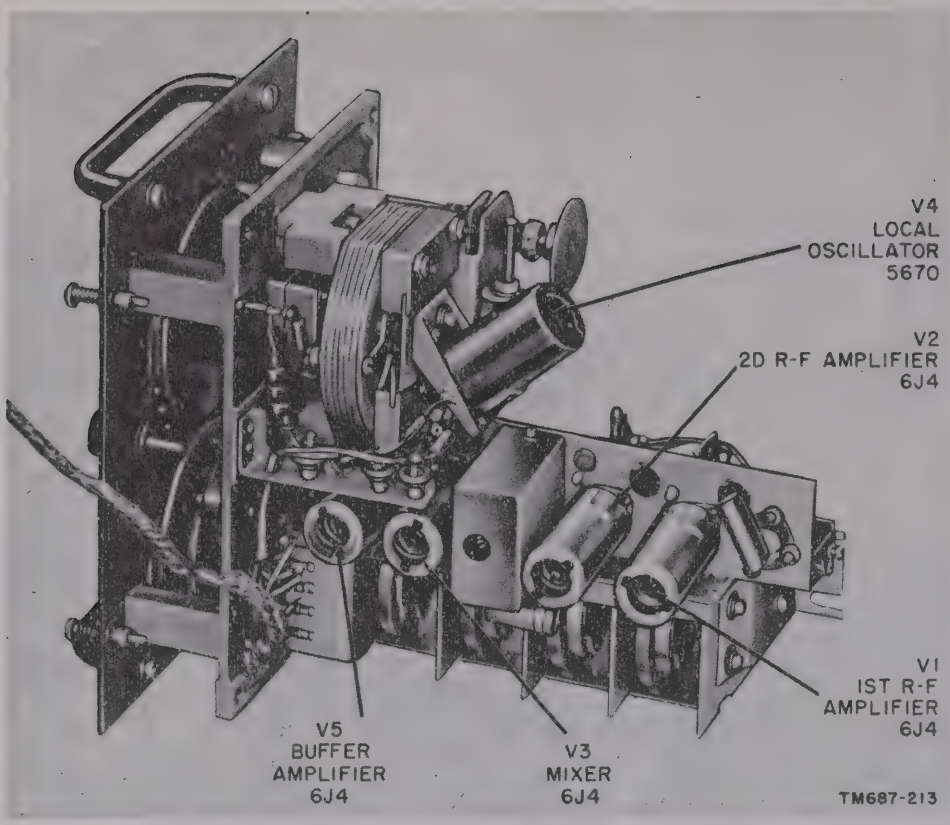

Figure 133. Amplifier-Converter AM-914/TRC, tube location.

153. Visual Inspection

a. Failure of this equipment to operate properly will usually be caused by one or more of the following faults:

(1) Disconnected or poorly connected plugs and receptacles.
(2) Worn or broken cords and cables.
(3) Burned-out fuses or open circuit breakers.
(4) Dirty relay contacts.
(5) Broken wires or loose connections.
(6) Defective crystals.
(7) Defective tubes.
(8) Improperly seated tubes.
(9) Improper tuning.
(10) Dirty contacts on tuner.
(11) Improper adjustment of antenna.
(12) Burned or open resistors.
(13) Swollen or leaking capacitors.

b. When failure is encountered and the cause is not immediately apparent, check as many of the above items as is practicable before starting a detailed electrical examination.

c. If possible, obtain information from the operator of the equipment regarding the performance at the time trouble occurred.

154. Test for Cable Continuity and Shorts

Follow the procedure outlined in *a* and *b* below to test a cable for continuity and shorts.

a. Connect a 50,000-ohm resistor between the inner conductor and the ground shield at one end of the cable.

b. Connect an ohmmeter between the inner conductor and the shield at the opposite end of the cable.

(1) If the ohmmeter reads approximately 50,000 ohms, the cable is normal.
(2) If the meter reads infinite resistance, the cable is open.
(3) If the cable reads zero resistance, the cable is shorted.
(4) If the meter reads more than zero but less than 50,000 ohms, the cable is partially shorted.

155. Removal of Assemblies, General Procedures

To remove an assembly from the AN/TRC–24, first remove the transmitter, receiver, or the power supply from its transit case (par. 156). After a unit has been removed from its case, follow the procedures outlined in paragraphs 157 through 166 to remove plug-in assemblies from the transmitter; paragraphs 167 through 171 to remove plug-in assemblies from the receiver; and paragraph 170 to remove the plug-in assembly from Power Supply PP–685/TRC. Paragraphs 173 and 174 respectively outline procedures for replacement of the air filter and blower motor of the receiver.

a. Tools for Removal of Assemblies. Two screwdrivers and three hexagonal wrenches are supplied with the equipment (fig. 22). These can be used to remove the assemblies and plug-in units. No other tools are necessary.

b. Removal of Knobs. Loosen the knob setscrews with a hexagonal wrench and pull off the knob.

c. Removal of Cam-Lock Fasteners. Rotate the cam-lock fastener one-fourth turn counterclockwise with a medium-size screwdriver. This will unlock the flanges of the fastener and the spring will cause the two sections to spring apart.

156. Removal of Transmitter, Receiver, and Power Supply from Transit Case

a. Remove all the connecting and grounding cables from the unit.

b. Release the cam-lock fasteners on the front panel (par. 155*c*).

c. Slide the unit out of the case as far as it will go.

d. Depress the drawer-stop levers on each side simultaneously and remove the unit from the case.

Warning: Discharge all capacitors in the transmitter or power supply with the shorting stick (par. 133*c*) as soon as the transmitter or power supply has been removed from its transit case.

157. Removal of Base-Band Amplifier Plug-in Assembly from Transmitter

Warning: Discharge all capacitors (par. 133*c*) in the transmitter before performing a disassembly.

a. Loosen the hexagonal set screws in the INPUT ADJ and MEASURE control knobs (fig. 87) and pull off the knobs.

b. Pull the vibration-mount lock control (fig. 6) on the front panel, as far forward as it will go. This releases the exciter unit from the upper chassis of the transmitter.

c. Release each of the three cam-lock fasteners on the rear of the chassis (par. 155*c*). This will allow springs to release the cam-lock fasteners and thus release the upper and lower chassis at the rear of the transmitter.

d. Raise the upper chassis from the rear until the hinged-brace catch operates (fig. 7). The brace, now rigid, will support the upper chassis in an almost vertical position.

e. Remove the cable that interconnects the pulsed oscillator and the rf exciter assemblies and passes through a hole in the base-band amplifier assembly.

(1) Separate cable connectors P104 and J107 at the rf exciter assembly.

(2) Pull cable connector P104 through the hole in the base-band amplifier assembly.

(3) Remove the pulsed-oscillator rf exciter cable from its holding clip and lay it back out of the way.

f. Disconnect connectors J103 and P103. This separates the base-band amplifier assembly and the if. amplifier assembly. Be careful not to kink the shaft.

g. Disconnect connectors P102 and J104. This separates the base-band amplifier assembly from the rf exciter assembly.

h. Release each of the four cam-lock fasteners, that hold the base-band amplifier to the transmitter chassis (par. 155).

i. Separate plug P101 and J102 by lifting the rear of the base-band amplifier away from the transmitter chassis.

j. Remove the base-band amplifier which is now free of the chassis and all connections.

158. Removal of Crystal-oscillator Plug-in Assembly from Transmitter

Warning: Discharge all capacitors (par. 133) in the transmitter before performing a disassembly.

a. Separate the upper and lower chassis of

the transmitter by following the procedures outlined in *a* through *d* of paragraph 157.

b. Rotate the XTAL SEL knob on the front panel (fig. 87) until the shaft setscrews are visible through the hole in the upper chassis.

c. Loosen the setscrews and pull the shaft as far forward as it will go.

d. Disconnect connectors P117 and J131 at the pulsed-oscillator assembly and move the cable out of the way.

e. Disconnect connectors J126 and P114.

f. Loosen the screw on terminal board TB111 and slide out spade lug E137. This will separate the crystal-oscillator assembly from the pulsed oscillator.

g. Release each of the four cam-lock fasteners that hold the crystal-oscillator assembly to the transmitter chassis (par. 155).

h. Lift the rear of the crystal-oscillator assembly to separate plug P113 from jack J123.

i. Pull the crystal-oscillator assembly backward and upward so that the switch shaft clears the panel cutout. Remove the crystal oscillator which is now free of all connections.

159. Removal of 60-cps Modulator Plug-in Assembly from Transmitter

Warning: Discharge all capacitors (par. 133*c*) in transmitter before performing a disassembly.

a. Separate the upper and lower chassis of the transmitter by following the procedures outlined in *a* through *d* of paragraph 157.

b. Remove the cables that connect to the pulsed-oscillator assembly by disconnecting connectors P115 and J127, P117 and J131, and P118 and J132. Move the cables out of the way.

c. Remove the remaining cable from the holding clip and move the cable out of the way.

d. Release each of the four cam-lock fasteners that hold the unit to the transmitter chassis (par. 155).

e. Lift the unit straight up and remove it from the transmitter.

160. Removal of Pulsed-oscillator Plug-in Assembly from Transmitter

Warning: Discharge all capacitors in transmitter (par. 133) before performing a disassembly.

a. Rotate front-panel PULSED OSC TUNE knob until the adapter-shaft setscrew can be viewed from the top rear of the front-panel.

b. Loosen the setscrew with the long-handled hexagonal wrench.

c. Extract the tuning knob and shaft assembly through the front-panel hole.

d. Disconnect the three cable connectors that connect the pulsed-oscillator assembly to other units.

e. Remove spade lug E137 from terminal board TB111 on the crystal oscillator.

f. Release the four cam-lock fasteners that hold the pulsed-oscillator assembly to the transmitter chassis (par. 155).

g. Lift the rear of the unit to separate plug P116 and jack J128.

h. Slide the unit toward the rear of the transmitter chassis (with the rear tilted upward) until the dials have cleared the panel wafer switch.

i. Lift the unit straight upwards, and remove it from the transmitter.

161. Removal of If. Amplifier Plug-in Assembly from Transmitter

Warning: Discharge all capacitors in transmitter (par. 133) before performing a disassembly.

a. Disconnect connectors P103 and J103 at the base-band amplifier assembly.

b. Remove the cable from the holding clip on the base-band amplifier assembly.

c. Disconnect connectors P118 and J132 at the pulsed-oscillator assembly.

d. Pull the flexible shaft coupling off the spline shaft on the discriminator. Be careful not to kink the shaft.

e. Release the two cam-lock fasteners that hold the assembly to the transmitter chassis (par. 155).

f. Lift the discriminator end of the assembly until plug P119 and jack J135 separate.

g. Tilt the assembly and lift it so that the finger-grip handles on the assembly clear the lifting handle of the transmitter chassis.

162. Removal of R-f Exciter Plug-in Assembly from Transmitter

Warning: Discharge all capacitors in transmitter (par. 133) before performing a disassembly.

a. Loosen the hexagonal setscrews on each of the five knobs on the front panel of the lower

transmitter chassis and remove the knobs.

b. Separate the upper and lower chassis of the transmitter by following the procedure outlined *a* through *d* of paragraph 157.

c. Disconnect connectors P104 and J107.

d. Disconnect connectors P102 and J104.

e. Remove the 11 screws that secure the cover of the rf exciter assembly and remove the cover.

f. Loosen the four captive screws that secure the cover of the driver unit and remove the cover.

g. Loosen the hose clamp near the driver and remove the hose from the manifold elbow.

h. Remove tube shield and tube V109 from its socket.

i. Remove the four screws that secure connectors J108 and P105.

j. Separate connectors J108 and P105 by pushing the mounting plate of connector J108 down.

k. Disconnect connectors P106 and J111 and move the cable aside.

l. Remove the hole plug at the top of the driver unit to gain access to the mounting nut beneath.

m. Remove the tube shields and tubes V105 and V107.

n. Remove the four elastic stop nuts that secure the assembly to the vibration mount studs.

o. Lift the rear end of the assembly to free the rear mounting studs.

p. Lift the front end and push the front mounting studs out of the square holes.

q. Tilt the rear and move the assembly backward to free the control shafts from the front-panel cutouts.

r. Slide the assembly toward the right side of the chassis until the spiral dial is free of the transmitter.

s. Tilt the assembly and lift it out of the transmitter.

163. Removal of Alarm-Circuit Plug-in Assembly from Transmitter

Warning: Discharge all capacitors in transmitter (par. 133) before performing a disassembly.

a. Separate the upper and lower chassis of the transmitter by following the procedures outlined in *a* through *d* in paragraph 157.

b. Release the two cam-lock fasteners that secure the alarm-circuit assembly (par. 155). The fasteners are accessible from the top of the lower chassis.

c. Pull the alarm-circuit assembly downward to separate plug P107 from jack J115. This completely frees the assembly for removal.

164. Removal of Crystal Rectifiers CR102 and CR103 from Directional-Coupler Assembly of Transmitter

Warning: Discharge all capacitors in transmitter before performing a disassembly.

a. Unscrew knurled caps of jacks J119 and J120.

b. Remove crystals from jack receptacles.

165. Removal of Rf Tuner from Receiver or Transmitter

a. Release the four cam-lock fasteners that secure the rf tuner to the receiver or transmitter panel (par. 155).

b. Slide out the rf tuner.

166. Removal of Band-Pass Filter or Dummy Filter from Receiver or Transmitter

a. Release the two cam-lock fasteners that secure the front panel of the filter to the receiver or transmitter front panel.

b. Slide the filter forward and out.

167. Removal of Power-Supply Plug-in Assembly from Receiver

a. Remove the power cables that connect the power supply with the receiver and with the blower motor.

b. Release the two front-panel cam-lock fasteners that are located above the POWER switch at the front panel of the receiver.

c. Position the receiver so that it rests on its left side.

d. Release the two cam-lock fasteners at the rear of the power supply (par. 155).

e. Lift the power supply away from the receiver chassis until the rear positioning pins are clear.

f. Move the power supply away from the front panel until the front positioning pins are clear.

g. Lift the power-supply assembly out.

h. The receiver power-supply assembly is shown in figure 131 detached from the unit.

168. Removal of Calibrator Assembly from Receiver

a. Remove the filter assembly from the receiver (par. 166).

b. Disconnect the coaxial connectors on the bottom of the calibrator assembly.

c. Release the two cam-lock fasteners that secure the calibrator assembly to the receiver (par. 155). The fasteners are accessible through holes in the receiver.

169. Removal of Base-Band Amplifier Plug-in Assembly from Receiver

a. Disconnect the coaxial-cable connector that connects the receiver base-band amplifier with the limiter-discriminator-afc assembly.

b. Turn the OUTPUT ADJ control to position 15.

c. Lift the spring at the rear of the OUTPUT ADJ control and pull the control knob away from the front of the panel.

d. Release the four cam-lock fasteners that secure the receiver base-band amplifier to the receiver.

e. Lift the assembly from the receiver.

170. Removal of Limiter-discriminator-afc Plug-in Assembly from Receiver

a. Disconnect the cable that connects the limiter-discriminator-afc plug-in assembly to the receiver if. amplifier assembly.

b. Disconnect the cable that connects the limiter-discriminator-afc assembly to the receiver base-band amplifier assembly.

c. Release the two cam-lock fasteners that secure the limiter-discriminator-afc assembly to the receiver.

d. Lift the assembly up and out of the receiver.

171. Removal of If. Amplifier Plug-in Assembly from Receiver

a. Disconnect the coaxial cable that connects the receiver if. amplifier assembly with the limiter-discriminator-afc assembly.

b. Release the two cam-lock fasteners that secure the receiver if. amplifier assembly to the receiver (par. 155).

c. Lift the assembly about an inch and disconnect the cable underneath it.

d. Tilt the assembly and lift it out of the receiver.

172. Removal of Low-Voltage Assembly from Power Supply PP–685/TRC

a. Release the four cam-lock fasteners that secure the low-voltage assembly to the power-supply chassis.

b. Grasp the handles of the assembly and lift it out of the power supply.

173. Removal and Replacement of Air Filter in Receiver

a. Remove the four cam-lock fasteners that secure the filter frame to the rear of the receiver chassis.

b. Lift out the filter.

c. To replace a clean filter, position it so that the arrow on the filter points toward the front of the receiver.

174. Removal and Replacement of Blower Motor in Receiver

a. Position the receiver so that it is lying on its right side.

b. Remove the blower connector from the power-supply assembly.

c. Release the two cam-lock fasteners at the sides of the blower opening, and lift out the blower assembly.

d. Note the distance between the edge of the blade and the opening. It should be three-sixteenths of an inch.

e. Loosen the hexagonal setscrew that holds the blade to the shaft of the blower.

f. Remove the blade.

g. Remove the four mounting screws in the motor body. These screws can be reached through the access holes in the bracket.

h. When replacing the four mounting screws in the motor body, apply glyptal enamel to the screw threads before the screws are inserted.

Section V. TROUBLESHOOTING AT ORGANIZATIONAL MAINTENANCE LEVEL

175. Organizational Maintenance Troubleshooting Procedures

When a trouble develops in an operating system, follow the procedure outlined in *a* through *f* below.

a. Refer to the procedures outlined in paragraph 177 to determine which component of the system is at fault.

b. If a component at the local radio station is determined to be faulty, communicate with

the control station (if possible), and wait for orders to proceed with the instructions in *c* through *f* below.

c. Replace the defective component with a spare.

d. Adjust the controls of the spare so that the system operation is resumed in the shortest possible time.

e. Perform the procedure outlined in the equipment performance check list (par. 179) to localize the source of the trouble.

f. Repair the component. If repair is not possible, refer the trouble to field maintenance personnel.

176. Test Equipment Required for Organizational Maintenance Troubleshooting

All of the test equipment required to troubleshoot the equipment at the organization maintenance level is supplied with the radio set. A listing of the test equipment and tools is given in paragraphs 131 and 132.

177. System Sectionalization of Trouble to a Component

a. General. When trouble occurs in a system, replace the defective component with a spare so that normal operation can be resumed with a minimum time delay. Follow the procedures outlined in *b* through *f* below to determine which components in the system are defective.

b. Easily Found Troubles. In the cases outlined in (1) through (3) below, it is possible to determine which component is faulty without performing any tests.

(1) If all the radio equipment at a station is dead, it is probable that the autotransformer, interconnection box, power unit, or the interconnections between the power unit and the autotransformer are faulty.

(2) If one component at a radio station is dead and the rest are operating, it is likely that the dead component is faulty.

(3) If the ALARM lamp of the transmitter lights after the transmitter has been operating for a sufficiently long period to warm the tubes, the transmitter or the power supply probably is at fault.

c. Procedure to Determine if Local Transmitter is Faulty. If a station is notified by a distant station that neither order-wire nor traffic communications are being received, either the local transmitter or the distant receiver is faulty. Follow the procedure outlined in (1) through (3) below to determine if the local transmitter is faulty.

(1) Place TEST switch S104 in the FWD PWR position and then to the REFL PWR position and check the TEST meter readings for normal indications (par. 107).

(2) Turn the transmitter MEASURE switch to the MOD ADJ position and check the MEASURE meter readings for normal indication (par. 103).

(3) If any of the indications are not normal, the local transmitter probably is faulty.

d. Procedure to Determine if Local Receiver Is Faulty. If the ALARM lamp lights in the receiver after the tubes have had sufficient time to warm up, either the local receiver or the distant transmitter is faulty. Follow the procedure outlined in (1) through (4) below to determine if the local receiver is faulty.

(1) Disconnect the antenna cable from the ANTENNA jack of the receiver.

(2) Connect cable CG–1031/U between the receiver CAL OUT and ANTENNA jacks.

(3) Adjust the receiver rf tuner to one of the red calibration marks on the dial. If the alarm is squelched by this procedure, the trouble probably is not caused by the local receiver. If the alarm continues to operate, the local receiver is defective.

(4) If the local receiver is determined to be all right, replace the antenna connection, readjust the rf tuner to the operating channel position, and stand by for the distant transmitter to resume operation.

e. Procedure to Determine if Telephone Carrier Equipment Is Faulty. If it is impossible for the attendant at a radio-terminal station to communicate with the local telephone carrier terminal over the spiral-four cable, but it is possible to communicate with the next radio station, the telephone carrier equipment or the spiral-four cable is defective.

f. Procedure to Locate Noise in System. When there is noise in the system, the terminal control station will contact each of the stations in the system in turn and instruct the attendant to proceed as follows:

(1) Disconnect the spiral-four cable at the REC binding posts of the receiver.
(2) Connect one end of the .1-μf capacitor (stored in the running-spares drawer) to one of the REC binding posts. Connect the 130-ohm resistor (stored in the running-spares drawer) between the free end of the .1-μf capacitor and the GND binding post.
(3) Connect Voltmeter ME–30A/U, with leads not exceeding 3 feet, across the 130-ohm resistor.
(4) Determine if the noise level reading (par. 118e) is excessive.
(5) If the noise level is not excessive, reconnect the spiral-four connections so that the next station in turn can make the test. If the noise level is excessive, replace the receiver with a spare. If noise at the faulty jump is still excessive, the receiver antenna or distant transmitter of the noisy jump is probably faulty.

178. Troubleshooting Using Equipment Performance Check List

a. General. The equipment performance check list (par. 179) will help the attendant to locate trouble in the equipment. The list gives the item to be checked, the normal indications and tolerances of correct operation, and the corrective measures the attendant can take. *To use this list, follow the items in numerical sequence.*

b. Action or Condition. For some items, the information given in the *Action or condition* column consists of various switch and control settings under which the item is to be checked. For other items, it represents an action that must be taken to check the normal indications given in the *Normal indications* column.

c. Normal Indications. The normal indications listed include the visible and audible signs that the operator should observe when he checks the items. If the indications are not normal the attendant should apply the recommended corrective measures.

d. Corrective Measures.

(1) Because of the numerous connectors and cables and connecting wires of the AN/TRC–24, corrective measures such as checking cable, plugs, and connectors for continuity have been omitted to avoid unnecessary repetition.
(2) The corrective measures listed are those that can be performed by an attendant who does not have access to a signal generator or a large store of replacement parts.
(3) If the corrective measure has been performed and the normal indication has not been restored, take voltage and resistance measurements (figs. 190–205) to locate the defective circuit element.
(4) If voltage and resistance measurements fail to localize the trouble, or if a necessary replacement part is not available to organizational maintenance personnel, refer the defective component to field maintenance personnel.

179. Equipment Performance Check List

	Item No.	Item	Action or condition	Normal indication	Corrective measures
	1	Power Unit PU–286/G	Operating	120-volt output	Refer to TM 11–940A.
	Omit items 2 through 12 below if components being checked are spares.				
PREPARATORY	2	Cable CX–2254/U	Connected between power unit and INPUT NO. 1 connector of switch box.		
	3	Spare Power Unit PU–286/G.	Not operating		
	4	Cable CX–2254/U	Connected between spare power unit and INPUT NO. 2 connector of switch box.		
	5	Switch box SA–331/U	POWER SUPPLY switch operated to NO. 1.		
	6	Interconnecting Box J–532/U.	Adjust bus bar link for 115-volt operation.		
	7	Cable CX–2251–U	Connected between switch box OUTPUT connector and interconnecting box AC INPUT 115/230V connector.	115 v ac power appears at the four convenience outlets.	Check fuses in interconnecting box.
	8	Cable CX–2257/U	Connect between an OUTPUT jack of the interconnecting box and AC INPUT 115–230V jack of autotransformer.		
	9	Antennas	Adjusted, erected and alined.		
	10	Wattmeter ME–82/U	Connected to ANTENNA jack on transmitter with cable CG–718/U.		
	11	Receiver REC, XMTG, and GND binding posts.	*a.* At a relay station, REC and XMTG binding posts of one receiver connected to XMTG and REC binding posts of the other receiver, respectively. (GND binding posts connected to rod MX–148/G (par. 65).) *b.* At a terminal station connected to cable assembly CX–1512/U spiral-four cable (GND connected to rod MX–148/G).		

	Item No.	Item	Action or condition	Normal indication	Corrective measures
	Perform items 12 through 16 below only if the components to be checked are spares.				
PREPARATORY	12	Wattmeter ME-82/U	Connected to ANTENNA jack of transmitter with Cable CG-718/U.		
	13	Cable CX-2257/U	Connected between spare autotransformer and spare power unit.		
	14	Cable CX-2256/U	Connected between spare autotransformer and spare receiver.		
	15	Cable CX-2258/U	Connected between spare autotransformer and spare transmitter.		
	16	Spare power unit	Operating	Output 120 volts, 60 cycles ac.	Refer to TM 11-940A.
	17	Handset H-90/U	Plugged into HANDSET jack of receiver.		
	18	Amplifier-Converter AM-913/TRC (or AM-914/TRC).	Plugged into receiver and locked securely.		
	19	Dummy filter	Plugged into receiver and locked securely.		
	20	Radio Frequency Amplifier AM-912/TRC or AM-915/TRC.	Plugged into transmitter and locked securely.		
	21	Dummy filter	Plugged into transmitter and locked securely.		
	22	Receiver and transmitter ALARM switches.	Operated to NOR position.		
	23	Receiver SQUELCH control.	Operated to extreme clockwise position.		
	24	Receiver AFC-OFF-CAL switch.	Operated to AFC position.		
START	25	Circuit breaker CB1 115V AC of power supply.	Operated to ON position	AC VOLTS meter M1 indicates input voltage to power supply.	Check circuit breaker CB1 (par. 332). Check four fuses in autotransformer and replace if defective. Check resistance of windings of transformer T1 of autotransformer (par. 318). Check switch S1 of autotransformer. Check meter M1.
				Blower motor B1 in power supply operates when temperature reaches 80° F.	Check blower motor (par. 328). Check thermostat S1.
				Amber FIL lamp of power-supply lights.	Replace FIL 1.5A fuse F5 in power-supply. Check transformer T5 (par. 318). Replace FIL lamp I 3.

	Item No.	Item	Action or condition	Normal indication	Corrective measures
				High-voltage tubes of power supply V1, V2, V3, and V4 light.	Replace HV FIL 1 A fuse F1. Check transformer T2 (par. 318). Replace tubes not lighted.
				Low-voltage tubes of power supply V5, V6, V8, and V9 light.	Replace LV FIL 1.5A fuse F2. Check transformer T3 (par. 318). Replace tubes not lighted.
				Blower motor B102 in the transmitter operates as soon as circuit breaker CB1 of power supply is operated.	Replace BLO 3A fuse F4 in power supply. Check blower motor (par. 330).
				Air is forced out of the vent holes in the front panel of transmitter and at the aperture at the bottom edge of front panel.	Check hose connections on the blower motor.
				All tubes in transmitter light.	Replace tubes not lighted.
	26	INCR OUT switch S1	Adjust until AC VOLTS meter M1 on Power Supply PP-685/TRC reads 115 V ac.	AC VOLTS meter M1 reads 115 V ac.	Check ac voltage source.
START	27	Switch S3 (DC TEST) of power supply.	Operate to 150 UPPER SCALE position.		
	28	Circuit CB3 (150V DC) power supply.	Operated to ON position.	Amber 150V DC lamp I 2 lights.	Replace lamp. Check circuit breaker (par. 332).
				DC TEST meter M2 reads 150 volts.	Replace .5 AMP fuse F3. Check tubes V5, V6, V7, V8, V9, and V10 and replace if defective. Adjust 150V ADJ control if reading is slightly in error.
	29	DC TEST switch S3	Turned to the 750 LOWER SCALE position.		
	30	750V DC circuit breaker CB2.	Thrown to the ON position.	Amber 750V DC lamp I 1 lights.	Replace lamp. Check circuit breaker (par. 332). Check Transformer T1 (par. 318). Check switch S2. Check blower motor (par. 330).
				DC VOLTS meter M2 of power supply reads 750 volts if C-band tuner is used; 350 volts if B-band tuner is used in transmitter.	Check tubes V1, V2, V3, and V4. Adjust 750V ADJ switch S2 until meter M2 reads 750 volts. Refer to paragraph 250*a* and *b* for functioning of hv interlock system.

EQUIPMENT PERFORMANCE

Item No.	Item	Action or condition	Normal indication	Corrective measures
31	DC TEST S3 of power supply.	Operated to 275 LOWER SCALE position.	DC VOLTS meter M2 of power supply reads 200 to 350 volts.	Same as item 30 above.
32	TEST switch S104 of transmitter.	Operated to OSC MOD PLATE position.	TEST meter M102 reads 10 to 15 μa.	Check tubes V105, V106, and V107. Check voltage and resistances at sockets of tubes V105, V106 and V107.
33	TEST switch S104 of transmitter.	Turned to DRIVER GRID position.	TEST meter M102 reads 10 to 25 μa.	Check tubes V108, V109, and V110. Check voltages and resistances at sockets of tubes V108, V109, and V110.
34	XTAL SEL switch S106	Turned to and held in DISCR CENTER position.		
35	DISCR CENTER control.	Adjusted until FREQ DRIFT meter reads 0.	Reading of FREQ DRIFT meter varies to each side of zero as DISCR CENTER control is adjusted.	Check tubes V114, V118, V119, V120, V121, V122, and V123. Replace the 10.125-mc crystal. Check flexible shaft from DISCR CENTER panel control to discriminator unit. Check crystal-oscillator operation by measuring voltage at jack J122.
36	MEASURE switch S102	Operated to RF CHAN TUNE position.	MEASURE meter M101 reads between 10 and 30 μa.	Check MEASURE switch for continuity in this position.
37	AFC switch	Operated to OFF position.		
38	XTAL SEL switch	Operated to DECADE CHANS position.		
39	PULSED OSC TUNE control L120.	Operated through a range of ±5 channels from normal setting.	FREQ DRIFT meter indication does not change.	Replace tubes V115 and V114.
40	XTAL SEL switch	Operated to UNIT CHANS position.		
41	PULSED OSC TUNE control L120.	Operated through a range of ±5 channels from normal setting.	FREQ DRIFT meter does not change indication.	Replace tube V113 or V114.
42	RF CHANNEL TUNE control L103.	Operated through a range of ±5 channels from normal setting.	MEASURE meter indicates a peak at each alternate channel. The peak of desired channel is about three times greater than peaks of other channels.	Check tubes V116, V117, V105, V106, V107, V108, and V109.
43	AFC switch S108	Operated to ON position.		
44	Front-panel AFC control C145.	Control rotates slowly during warm-up intervals.	After warm-up, the control assumes a fixed position.	Replace tubes V124 and V125. Check PULSED OSC switch.
		Manually displaced from fixed position.	Automatically returns to original position.	Check PULSED OSC TUNE dial channel setting.
45	XTAL SEL switch	Operated to DECADE CHANS position.		

EQUIPMENT LERFORMANCE

Item No.	Item	Action or condition	Normal indication	Corrective measures
46	RF CHANNEL TUNE dial.	Rotated through range of ±30 channels.	MEASURE meter indicates a peak response at each 10-channel interval.	Replace tube V115.
47	MEASURE switch S102.	Operated to 1KC ADJ position.		
48	1KC ADJ control R141	Operated within limits of its range.	MEASURE meter reading varies as control is operated.	Replace tube V104 (1-kc oscillator).
49	1KC ADJ control R141	Adjusted for 0-db indication on MEASURE meter (+10 db output).		
50	MEASURE switch S102	Operated to MTR CAL position.		
51	MTR CAL control R134	Operated within limits of its range.	MEASURE meter reading varies as control is operated.	Replace tubes V103 and V104. Refer to field maintenance for troubleshooting the metering, transmitter base-band, and 1-kc oscillator circuits.
52	MTR CAL control R134	Adjusted for 0-db indication on MEASURE meter (+10 db output).		
53	MEASURE switch S102	Operated to DISCR RF DRIVE position.		
54	DISCR RF DRIVE control R139.	Operated within limits of its range.	MEASURE meter reading varies as control is operated. Normal meter indication 0 (+10 db).	Refer to field maintenance to troubleshoot transmitter if. amplifier.
55	MEASURE	Operated to MOD ADJ position.		
56	MOD ADJ control R104	Operated within limits of its range.	MEASURE meter reading varies as the control is operated. Normal meter indication if 0 db if C-band tuner is used or +2 db if B-band tuner is used.	Check switch S102. Refer to field maintenance for troubleshooting of the if. amplifier.
57	RECEIVER jack J101 of transmitter.	Shorting wire connected between terminals A and J of jack J101.		
58	INPUT ADJ control	Operated within limits of its range.	MEASURE meter reading varies as the control is operated.	Check switch S102 and INPUT ADJ control for continuity.
59	INPUT ADJ control	Operated to position 15	MEASURE meter reads 0 db.	Check switch S102.
60	RECEIVER jack J101 of transmitter.	Shorting wire removed from terminals A and J.		
61	MEASURE switch S102 (omit this item if a 68-kc signal generator is not available).	Operated to MOD 68KC IN position.	MEASURE meter reading varies as INPUT ADJ control is operated when a 68-kc signal is applied to terminals A and J of jack J101.	Check switch S102.
62	TEST switch S104	Operated to DRIVER CATH position.	TEST meter M102 reads 10 μa.	Replace tube V110.

	Item No.	Item	Action or condition	Normal indication	Corrective measures
EQUIP. PERF.	63	DRIVER TUNE control L110.	Adjusted within limits of its range.	TEST meter M102 reading varies as control is adjusted. Dip in reading occurs when circuit is properly tuned. *Note.* The meter variation is very slight when control L110 is adjusted.	Check to be sure that transmitter is adjusted for proper channel and proper band. Check for proper operating voltages at terminals 1, 13, 20, and 21 of connector P105.

Items 64 through 70 below apply when the transmitter is equipped with Radio Frequency Amplifier AM–912/TRC

EQUIPMENT PERFORMANCE	64	TEST switch S104	Operated to PWR AMPL GRID position.		
	65	DRIVER TUNE control L110.	Adjusted for maximum reading on TEST meter (approximately 20 μa).	TEST meter reading varies as control is operated.	Replace tube V1. Check for agreement of dial positions of RF CHAN TUNE and DRIVER TUNE controls. Check for filament supply on tube V1.
	66	DRIVER OUTPUT COUPLING control.	Adjusted to provide TEST meter indication of 30 μa.	TEST meter reading varies as control is operated.	Same as item 65 above.
	67	GRID control of rf tuner.	Adjusted for maximum reading on TEST meter.	TEST meter reading varies as control is operated.	Same as item 65 above.
	68	TEST switch S104	Operated to PWR AMPL CATH position.		
	69	PLATE control of rf tuner.	Adjusted for minimum reading on TEST meter.	Wattmeter ME–82/U indicates maximum reading.	Check for agreement of dial positions of PLATE and GRID controls of tuner. Replace tube V1.
	70	AMPLIFIER OUTPUT COUPLING control of rf tuner.	Adjusted for minimum reading on TEST meter.	Wattmeter ME–82/U indicates maximum reading.	Same as item 69 above.

Items 71 through 82 below apply when the transmitter is equipped with Radio Frequency Amplifier-Multiplier AM–915/TRC.

EQUIPMENT PERFORMANCE	71	TEST switch S104	Operated to MULT GRID position.		
	72	DRIVER TUNE control L110.	Adjusted for maximum reading on TEST meter.	TEST meter reading varies as control is adjusted.	Check for agreement of dial positions of RF CHAN TUNE and DRIVER TUNE controls. Replace tube V1. Check for filament supply on tube V1.
	73	DRIVER OUTPUT COUPLING control.	Adjusted to provide TEST meter indication of 30 μa.	TEST meter reading varies as control is adjusted.	Same as item 72 above.
	74	MULTIPLIER GRID control of tuner.	Adjusted for maximum reading on TEST meter.	TEST meter reading varies as control is operated.	Same as item 72 above.
	75	TEST switch S104	Operated to MULT CATH position.		

EQUIPMENT PERFORMANCE

Item No.	Item	Action or condition	Normal indication	Corrective measures
76	MULTIPLIER PLATE control of tuner.	Adjusted for minimum reading on TEST meter.	Wattmeter ME–82/U indicates maximum reading.	Replace tube V1.
77	TEST switch S104	Operated to PWR AMPL GRID position.		
78	POWER AMPLIFIER GRID control of tuner.	Adjusted so that TEST meter reads maximum.	TEST meter reading varies as control is operated.	Replace tube V2.
79	MULTIPLIER OUTPUT control of tuner.	Adjusted so that TEST meter reads maximum.	TEST meter reading varies as control is operated.	Replace tube V2.
80	TEST switch S104	Operated to PWR AMPL CATH position.		
81	POWER AMPLIFIER PLATE control of tuner.	Adjusted for maximum indication on wattmeter.		
82	AMPLIFIER OUTPUT COUPLING control of tuner.	Adjusted for maximum indication on wattmeter.	Rf output should be at least 85 watts when TEST meter reads 27.5 μa.	Replace tube V2.
83	Directional coupler assembly.	Positioning marks on the forward-power and reflected-power sections aligned with positioning mark on transmission section of coupler.		
84	ALARM switch S105	Operated to OFF position.		
85	TEST switch S104	Operated to FWD PWR position.	TEST meter indicates 30 μa or higher.	Replace crystal CR102 in directional coupler (par. 164).
86	TEST switch S104	Operated to REFL PWR position.	TEST meter indicates 10 μa or lower.	Replace crystal CR103 in directional coupler (par. 164).
87	Wattmeter ME–82/U	Disconnected from ANTENNA jack of transmitter.	TEST meter indicates 15 μa or higher.	Refer to field maintenance for troubleshooting directional coupler.
88	Wattmeter ME–82/U	Connected to ANTENNA jack of transmitter.		
89	AMPLIFIER OUTPUT COUPLING control of tuner.	Adjusted to about 30 watts output on wattmeter.		
90	THRESHOLD ADJ control R191.	Adjust to extreme counterclockwise position.		
91	ALARM switch S105	Operated to NOR position.		
92	THRESHOLD ADJ control R191.	Rotate clockwise until LOW PWR ALARM lamp I 101 lights.	LOW PWR ALARM lamp I 101 lights and buzzer I 102 sounds.	Replace tube VIII of alarm circuit. Replace lamp. Replace buzzer. Check ALARM switch. Check relay K101 (par. 324).
93	AMPLIFIER OUTPUT COUPLING control of tuner.	Adjust for maximum reading on wattmeter.	LOW PWR ALARM lamp I 101 goes out and buzzer I 102 becomes silent.	Replace tube V112.

	Item No.	Item	Action or condition	Normal indication	Corrective measures
EQUIPMENT PERFORMANCE	94	ALARM switch S105	Operated to REV position.	LOW PWR ALARM lamp I 101 remains out and buzzer I 102 sounds.	Check ALARM switch S105 and relay K101 (par. 324).
	95	Dummy filter	Removed from transmitter.	LOW PWR ALARM lamp lights and buzzer is silenced.	
	96	The band-pass filter for the desired frequency (par. 64*e*).	Plugged into transmitter and locked securely in place.		
	97	Band-pass filter	Tuning of filter adjusted to desired channel without disturbing tuning of transmitter.	Wattmeter indicates 60 watts or more.	Refer to field maintenance for final testing of band-pass filters.
	98	TEST switch S104	Operated to FWD PWR position.	TEST meter indicates 25 μa or more.	
	99	TEST switch S104 (omit this item if equipment being checked is a spare.)	Operated to REFL PWR position.		
	100	Antenna rf cable (omit this item if equipment being checked is a spare).	Connected to ANTENNA jack of transmitter.	TEST meter indicates 10 μa or lower.	Check antenna assembly and rf cable for electrical or mechanical damage.
Radio Receiver R–417/TRC					
EQUIPMENT PERFORMANCE	101	Cable CX–2252/U	Connected between RECEIVER jack of transmitter and TRANSMITTER jack of receiver.		
	102	MEASURE switch S106	Operated to B+ position.		
	103	POWER circuit breaker CB101 of receiver.	Operated to ON position	POWER lamp I 101 lights.	Check interlock system (par. 333) for continuity. Replace lamp I 101. Check resistance of transformer T102 (par. 318). Check circuit breaker CB101 (par. 332).
				All tubes in receiver light.	Replace tubes not lighted.
				ALARM lamp I 102 lights and buzzer I 103 sounds.	Replace ALARM lamp. Replace buzzer.
				MEASURE meter M102 reads 0 until tubes watm up.	Check relay K101 (par. 324).
	104	ALARM switch	Operated to REV position before tubes have a chance to warm up.	ALARM lamp remains lighted. Buzzer becomes silent.	Check switch S104.
	105	MEASURE meter	Reads 30 μa (+150 volts) when tubes become warm.	ALARM lamp remains lighted and buzzer sounds. RING lamp goes out.	Check power supply and squelch circuits (field maintenance).
	106	ALARM switch	Operated to NOR position.	Buzzer becomes silent.	
	107	Cable CG–1031/U	Connected between CAL OUT and ANTENNA jacks.		

EQUIPMENT PERFORMANCE

Item No.	Item	Action or condition	Normal indication	Corrective measures
108	AFC control	Adjusted to 0 position.		
109	(a) B-band tuner (if used).	Adjust the dial to the red calibration marking nearest to the desired channel (same channel to which transmitter is tuned).		
	(b) C-band tuner (if used).	Adjust RF AMP and OSC dials to the red calibration markings nearest desired channel (same channel to which transmitter is tuned).		
110	MEASURE switch S106	Operated to SIG LEV position.		
111	AFC–OFF–CAL switch S101.	Operated and held to CAL position.		
112	OSC control of C-band tuner or RF AMP control of B-band tuner.	Operated to each side of red calibration mark.	MEASURE meter reading varies as OSC control is operated.	Check tuner tubes, and V101, V102, V103, V104, V105, V106, V107, and V108.
113	OSC dial of tuner	Operated a small amount for zero on FREQ DRIFT.	Reading on FREQ DRIFT meter varies as OSC dial is operated. Meter needle remains steady when control is adjusted.	Check tubes V109, V110, V111, V112, V113, V114, and V115.
			ALARM lamp goes out and buzzer silences to indicate that a calibrator signal is being received.	Replace tube V125. Check relay K101 (par. 324).
114	SQUELCH control R170.	Rotated to extreme counterclockwise position.	ALARM lamp lights and buzzer sounds to indicate that the receiver is squelched.	Replace tubes V108 and V125.
115	SQUELCH control R170.	Rotated clockwise until ALARM lamp goes out.	Buzzer silences and ALARM lamp goes out.	Replace tube V125.
116	AFC–OFF–CAL switch S101.	Released to OFF position.	ALARM lamp lights and buzzer sounds.	
117	Short piece of unshielded wire (about 6 inches long).	Inserted into ANTENNA jack of receiver.		
118	Rf tuner of receiver	Dials adjusted for zero reading on FREQ DRIFT meter.	ALARM lamp goes out and buzzer becomes silent.	Check to see that the transmitter and receiver are operating on the same frequency. Replace tubes of the rf tuner.
119	AFC–OFF–CAL switch S101.	Operated to AFC position.		
120	AFC control of transmitter.	Detune slightly to change frequency.	AFC knob C19 of receiver tuner moves with change of frequency.	Check tubes V113, V114, and V115.
121	MEASURE switch of transmitter.	Operated to 1KC ADJ position.		
122	1KC ADJ control of transmitter.	Adjusted for 0 db on transmitter MEASURE meter.	MEASURE meter reading varies as control is operated.	

	Item No.	Item	Action or condition	Normal indication	Corrective measures
EQUIPMENT PERFORMANCE	123	MEASURE switch of receiver.	Operated to MTR CAL position.	MEASURE meter reads 0 ±.5 db.	Adjust ADJ METER (internal adjustment) control R260 located on receiver base-band amplifier assembly.
	124	MEASURE switch of receiver.	Operated to 1KC OUT position.		
	125	MEASURE switch S102 of transmitter.	Operated to MOD ADJ position.	MEASURE meter of receiver reads 0 ±.5 db.	Check tubes V111, V122, and V123. Refer to paragraph 316.
	126	RING-TALK switch of receiver.	Operated to RING position.	RING lamp lights and buzzer sounds. MEASURE meter reading on receiver indicates signal is being transmitted.	Replace RING lamp. Check tubes V127, V128, and V129. Check filter FL102 of the receiver (par. 322).
STOP	127	All power switches of power supply and receiver.	Operated to off positions	All indicator lamps extinguish. MEASURE meter pointer at 0 μa.	Disconnect equipment from power source and check power switches. Adjust zeroing screw on meter.
	128	Short piece of wire	Removed from receiver ANTENNA jack.		
	129	Cable CX-2252/U	Disconnected if receiver is a spare.		
	130	Antenna rf cable	Connected to ANTENNA jack of receiver if receiver is not a spare.		

CHAPTER 5

AUXILIARY EQUIPMENT

180. Purpose of Scaffold Tower AB–216/U

Scaffold Tower AB–216/U provides a very rigid support for antennas and related equipment. The scaffold tower will support an antenna to a basic height of 78 feet over a horizontal ground surface.

181. Description of Scaffold Tower AB–216/U

Scaffold Tower AB–216/U is a sectionalized tower that consists of 1 base section and 12 upper sections. Each section is 6 feet high and is made of aluminum tubing with a semigloss white paint finish. The overall dimensions of the tower are 78 feet high, 4 feet wide, and 6 feet long. For further information on Scaffold Tower AB–216/U, refer to TM 11–5073.

182. Applications of Scaffold Tower AB–216/U to Radio Set AN/TRC–24

Scaffold Tower AB–216/U can be used to provide a higher and more rigid support for the antennas of Radio Set AN/TRC–24 than is provided by Mast AB–235/G. When the scaffold tower is used with Radio Set AN/TRC–24, Mast AB–235/G is not used.

CHAPTER 6

THEORY

Section I. THEORY OF CARRIER SYSTEM

183. Functioning of AN/TCC–7 Telephone System

a. General. The block diagram of a system using AN/TCC–7 carrier telephone terminals and Radio Sets AN/TRC–24 is shown in figure 134. This system provides 12 channels for voice-frequency traffic communications plus an order-wire channel for maintenance of the system. The system consists of Telephone Terminal AN/TCC–7, Telephone Repeater AN/TCC–8, and Radio Set AN/TRC–24. A brief description of the system is given in *b* through *f* below.

b. Telephone Terminal AN/TCC–7. The block diagram representation of Telephone Terminal AN/TCC–7 (fig. 134) is simplified to show the three modem (modulator-demodulator) units, the three subgroup modulators, the group modulator, the order wire, and the 68-kc pilot circuits. The telephone terminal provides 12 channels for the transmission of traffic signals and 1 channel for transmission of order-wire signals.

(1) Four voice-frequency signals, each occupying the frequency range of 250 to 3,500 cps, are applied to each of the three modem units. Each of the four voice-frequency signals in a modem modulates a different carrier frequency. The output of the modem consists of four modulated signals, each occupying a different frequency range. These four modulated signals are combined and applied to one of the subgroup modulators. The outputs of the other modem units occupy the same frequency range and are applied to the other subgroup modulators.

(2) In a subgroup modulator, the combined output from one modem unit modulates a carrier frequency. Different carrier frequencies are used in the three subgroup modulators so that the outputs of the three subgroup modulators occupy three distinct and separate frequency ranges. The outputs of the three subgroup modulators are combined and applied to the group modulator.

(3) The combined signals from the subgroup modulators modulate a carrier frequency in the group modulator to produce a band of lower sideband frequencies from 12 kc to 60 kc. The output of the group modulator is combined with the 68-kc pilot frequency and the order-wire signals. The order-wire signals occupy a voice-frequency range of approximately 250 to 3,000 cps. The pilot signal is used for automatic regulation of amplifiers and for alarm purposes. The output of the telephone terminal contains the output of the group modulator, the 68-kc pilot signal, and the order-wire signals. These output frequencies range from 250 cps to 68 kc. This range of frequencies is known as the base band.

c. Telephone Repeater AN/TCC–8. The base-band frequencies are transmitted from the terminal over spiral-four cable, through one or more unattended repeaters (not shown in fig. 134), to Telephone Repeater AN/TCC–8. The level of the base-band signals is adjusted in Telephone Repeater AN/TCC–8 to compensate for the loss-versus-frequency characteristics of the spiral-four cable. The base-band signals are

then transmitted over spiral-four cable directly or through additional attended repeaters to Radio Set AN/TRC–24.

d. Telephone Repeater AN/TCC–11. Unattended repeaters (AN/TCC–11) are located at points approximately 5½ miles apart in the spiral-four cable path between Telephone Terminal AN/TCC–7 and Telephone Repeater AN/TCC–8. Telephone Repeater AN/TCC–11 provides automatically regulated amplification of the base-band signal to compensate for attenuation of the spiral-four cable. The 68-kc pilot signal level is used to regulate the amplification of these unattended repeaters. The operating voltages for the unattended repeaters are supplied over the spiral-four cable and high voltages are therefore present on the cable coming from an unattended repeater. The unattended repeaters do not compensate for the slope (loss-versus-frequency) characteristic of the spiral-four cable. For these reasons, an unattended repeater (AN/TCC–11) must not be connected directly to Radio Set AN/TRC–24. For simplicity, the unattended repeaters are not shown on the system block diagram.

e. Radio Set AN/TRC–24. The base-band signals are applied to the fm transmitter of the AN/TRC–24 and the rf output is transmitted by radio waves to a distant AN/TRC–24. The signal is received in the fm receiver of the distant AN/TRC–24 where the fm signal is demodulated and is transmitted from the receiver to the remainder of the system over spiral-four cable as the base-band signals.

f. Remainder of System.

(1) From the distant AN/TRC–24, the signal may pass through additional repeaters to reach the distant Telephone Terminal AN/TCC–7. At the distant terminal, the signal is demodulated first in the group demodulator to produce three bands of signals. Each band is selected by filters and applied to a subgroup demodulator. The demodulated output of each subgroup is applied to one modem, and there filters divide the signal into four signals. Each of the four signals is demodulated to produce the original voice-frequency signal. Thus, 12 voice-frequency outputs can be obtained from the system.

(2) Simultaneous transmissions in the other direction are accomplished in the same way in the same frequency range except for the radio link. Radio transmissions in one direction must be at a different carrier frequency than the radio transmissions for the other direction.

Figure 134. Telephone carrier system, AN/TCC–7, combined with Radio Set AN/TRC–24, block diagram.

(Contained in separate envelope.)

184. Functioning of AN/TCC–3 Telephone System

a. In a system using Telephone Terminal AN/TCC–3, the base-band signals occupy the frequency range of 350 to 19,700 cps. The AN/TCC–3 system provides four channels for the transmission of traffic communications and one channel (order-wire channel) for maintenance communications. Telephone Terminal AN/TCC–3 contains one modem, which serves the same functions as one of the modems in Telephone Terminal AN/TCC–7, an order-wire circuit, and a circuit that generates a 4-kc system alarm pilot.

b. An AN/TCC–3 telephone system may include Telephone Repeater AN/TCC–5 located at suitable points in the system to compensate for the attenuation-versus-frequency characteristics of the spiral-four cable. When Radio Set AN/TRC–24 is used, it serves the same function as in an AN/TCC–7 telephone system.

185. Similarities in AN/TCC–7 and AN/TCC–3 Systems

a. In either an AN/TCC–3 or an AN/TCC–7 system, four traffic channels (one modem) may be replaced by one wide-band channel for the transmission of special-service information such as telephoto or high-speed data transmissions.

b. Signaling in both systems and in Radio Set AN/TRC–24 is at 1,600 cps. These ringing signals are transmitted over the order-wire channel.

c. In addition to the pilot signal that is transmitted continuously, in each system several test signals may be transmitted under the control of the telephone-terminal attendant. In the AN/TCC–7, test signals of 12 kc and 28 kc or of 64 kc can be introduced. In the

AN/TCC–3, test signals of 1 kc, 7 kc, 11 kc, 15 kc, and 19 kc can be introduced. These test signals are used for system line-up and for checking system operation. For Radio Set AN/TRC–24, only the 68-kc pilot from the AN/TCC–7 or the 1-kc test signal from the AN/TCC–3 is important.

186. Functioning of Radio Set AN/TRC–24

a. General. Radio Set AN/TRC–24 is an fm transmitter-receiver that has a frequency range of 100 to 400 megacycles. Functionally, the radio set can be divided into three major circuits: first, a radio transmitter that includes all the circuits necessary for the transmission of base-band information as an fm radio wave; secondly, a radio receiver that includes all the circuits necessary to select and demodulate the fm radio wave and to transmit the base-band frequencies to the spiral-four cable; and thirdly, order-wire and signaling circuits that permit the radio set attendant to communicate with other attendants in the communication system. A block diagram illustrating the interrelationship of these three major circuits of Radio Set AN/TRC–24 is shown in figure 135. With respect to a radio set, the system consists of two sides. One side of the system is connected to the radio set through spiral-four cable. This will be referred to as the cable side of the system. The other side of the system is connected to the radio set through the air. This is the air side of the system. The directions of transmissions will be referred to as the cable-to-air and the air-to-cable directions.

b. Radio Transmitter.

(1) The base-band signals from the spiral-four cable are applied to the input of the radio transmitter. The level of the base-band signals is adjusted and the signals are amplified. The amplified base-band signals frequency modulate the base rf oscillator. The center frequency of the base rf oscillator is accurately controlled by an afc circuit. The output frequency of the oscillator is doubled and applied to either the B-band or C-band rf tuner. The C-band tuner provides an additional frequency-doubler stage, and the B-band tuner serves as a straight amplifier. The output of the rf tuner is applied to the transmitting antenna to be radiated to the distant AN/TRC–24 and to other stations in the cable-to-air direction.

(2) The frequency range of the AN/TRC–24 is 100 to 400 megacycles. The range from 100 to 225 megacycles is designated the B-band; the range from 225 to 400 megacycles is the C-band. The band in which the AN/

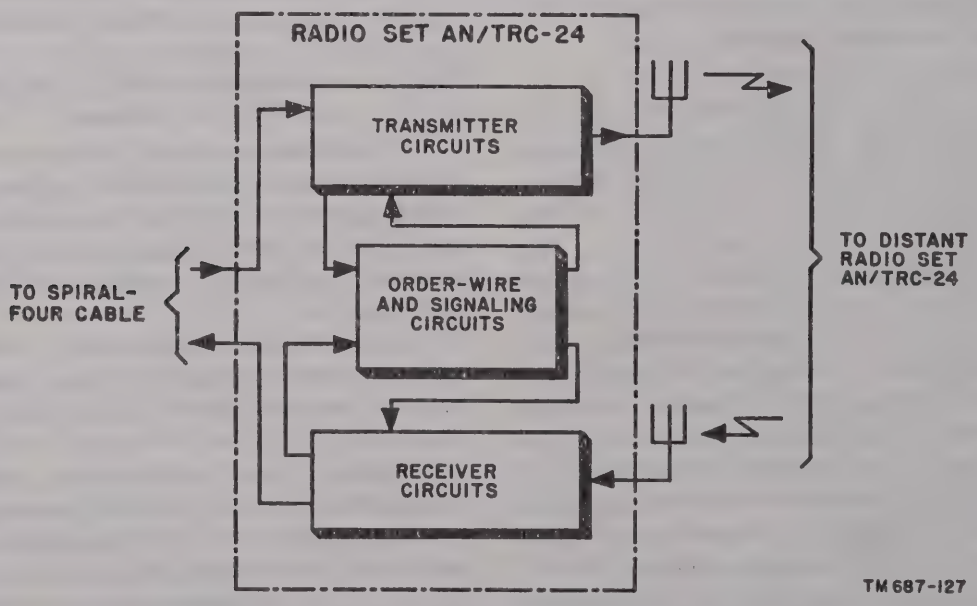

Figure 135. Radio Set AN/TRC–24, functional block diagram.

TRC–24 operates is determined by the rf tuner used. When A-band and D-band tuners are available, the range of the AN/TRC–24 will be 50 to 600 megacycles. The A-band will operate from 50 to 100 megacycles and the D-band from 400 to 600 megacycles. When the A-band is used, there will be no frequency multiplication because the base rf oscillator is tunable over the A-band of frequencies. When the D-band is used, the rf oscillator frequency is doubled and applied to the D-band tuner, which will operate as a frequency-tripler stage.

c. Radio Receiver.

(1) The radio receiver of the AN/TRC–24 is a superheterodyne fm receiver with a 30-megacycle intermediate frequency. The receiver has agc for the if. amplifier, automatic frequency control for the local oscillator, and squelch for automatic noise suppression. The radio receiver operates at a different frequency than the transmitter of the same radio set. This provision makes possible simultaneous transmissions in both directions. However, the receiver and transmitter may operate in the same frequency band or in different bands.

(2) The frequency-modulated signal that is transmitted from the distant radio set is applied in the receiver to either the B-band or the C-band tuner where the rf signal is amplified and converted to a 30-megacycle intermediate frequency. The local-oscillator frequency is accurately controlled by an automatic frequency control circuit. The 30-megacycle if. signal is amplified and then demodulated and the resulting base-band frequencies are further amplified and carried over spiral-four cable to the next station on the line.

d. Order-Wire and Signaling Circuits. Order-wire signals transmitted over the spiral-four cable occupy a frequency range of approximately 250 to 3,000 cps. The signaling frequency is 1,600 cps.

(1) Order-wire and 1,600-cps signals received at the AN/TRC–24 from the spiral-four cable are part of the base-band signals and are amplified in the transmitter. The amplified signals are connected to the order-wire and signaling circuits where the order-wire and 1,600-cps signals are selected and amplified, and applied both to the receiver unit in the handset and to the signaling circuits. The amplified signals in the transmitter also frequency modulate the oscillator and are transmitted to the distant AN/TRC–24.

(2) Signals transmitted from the distant AN/TRC–24 are received, demodulated, and amplified in the receiver of the AN/TRC–24. The amplified base-band signals are applied to the spiral-four cable and to the order-wire and signaling circuits. There the order-wire and 1,600-cps signals are selected from the base-band signals, are amplified, and are applied both to the receiver unit in the handset and to the signaling circuit.

(3) When a 1,600-cps signal of sufficient amplitude and duration is applied to the signaling circuit, a buzzer sounds and the RING lamp lights to indicate the reception of a ringing signal.

(4) Transmission of ringing or order-wire signals from the AN/TRC–24 is controlled by the RING-TALK switch. When the RING-TALK switch is in the RING position, the signaling circuit generates a 1,500-cps ringing signal. This ringing signal is applied to both the transmitter and receiver circuits. In the transmitter, this ringing signal is combined with the input base-band signals and is transmitted to the distant AN/TRC–24 as a frequency-modulated radio wave. In the receiver, the ringing signal is combined with the base-band signals, is amplified and applied to the spiral-four cable.

(5) When the RING-TALK switch is in the TALK position, voice signals from the transmitter unit in the handset are amplified and applied to both the radio transmitter and radio receiver

circuits in the same way as the ringing signal ((4) above). In addition, a portion of the voice-frequency output of the radio receiver is amplified and applied to the receiver unit in the handset in order to provide sidetone.

Section II. THEORY OF TRANSMITTER CIRCUITS

187. General

The transmitter circuits consist of the following components of Radio Set AN/TRC–24: Radio Transmitter T–302/TRC, Radio Frequency Amplifier AM–912/TRC or Radio Frequency Amplifier-Multiplier AM–915/TRC, the dummy filter or one of the band-pass filters of Filter Kit MK–123/TRC or of Filter Kit MK–124/TRC, Antenna AS–639/TRC or Antenna AS–640/TRC, Power Supply PP–685/TRC, Autotransformer Fixed Power Transformer TF–167/TRC, Interconnecting Box J–532/U, and Switch Box SA–331/U. A brief description of the function of the transmitter circuits is contained in paragraph 186*b*. The block diagram of the transmitter circuits is shown in figure 136. A detailed discussion of the block diagram is contained in paragraphs 188 through 213.

Figure 136. Transmitter circuits, block diagram.
(Contained in separate envelope.)

188. Functioning of Input Circuits

The base-band signal input (250 to 68,000 cps) to the transmitter can be applied from a balanced source having a characteristic impedance of either 600 ohms or 135 ohms. The input circuit matches either source impedance to 600-ohm low-pass filter FL101. The base-band signal input is filtered to eliminate interference at frequencies above 68 kc. The filtered signal is adjusted by the INPUT ADJ potentiometer during system line-up to compensate for daily variations in the level of the received signals. The signal is then applied to a pre-emphasis circuit that has an attenuation that decreases with frequency. The pre-emphasis circuit improves the signal-to-noise ratio of transmissions at the upper frequencies of the base-band range. The output of the pre-emphasis circuit is combined with any order-wire or ringing signals that originate at the local AN/TRC–24. A detailed description of the input circuits is contained in paragraph 214.

189. Functioning of Base-Band Amplifier

The combined signal from the input circuits is applied to the grid of tube V101, the first base-band amplifier. The base-band amplifier is a three-stage amplifier with an overall gain of 20 db. This gain raises the signal level to that required by the modulator. The last stage of the base-band amplifier is a phase inverter that supplies a balanced output to the reactance modulator. Paragraph 215 contains the theory of operation of the base-band amplifier.

190. Functioning of Reactance Modulator

The base-band signals are applied to the grids of tubes V105 and V106 of the reactance modulator. A portion of the base rf oscillator output also is applied to the grids of the reactance modulator tubes. The output of the reactance modulator is an rf current, which lags or leads the oscillator voltage by 90°. This current is applied to the oscillator tank circuit and causes the oscillator frequency to increase or decrease from the center frequency by an amount proportional to the instantaneous applied base-band signal voltage. The detailed analysis of the reactance modulator is given in paragraph 216.

191. Functioning of Base Rf Oscillator

The base rf oscillator is the Colpitts type. The oscillator can be tuned by the RF CHANNEL TUNE control over the frequency range of 50 to 112.5 megacycles. A trimmer capacitor in the oscillator tuned circuit is continuously kept in adjustment by the afc motor to compensate for oscillator frequency drift from the center frequency. The base rf oscillator is discussed in detail in paragraph 217.

192. Functioning of Buffer Amplifiers

The frequency-modulated output of the base rf oscillator is applied to the grid of tube V108, the first of two buffer amplifiers. The buffer amplifiers operate at the base rf oscillator fre-

quency and are ganged tuned with the oscillator and reactance modulator stages. The buffer amplifiers reduce loading effects on the oscillator, reduce by limiter action any amplitude modulation of the oscillator output, and provide sufficient output for the operation of the driver stage. A small portion of the output of the second buffer is applied to the afc mixer. A detailed description of the buffer amplifiers is contained in paragraphs 218 and 219.

193. Functioning of Driver

The output of the buffer amplifiers is applied to the grid of the driver stage, tube V110. When the transmitter is operating in the B- or C-band, the driver operates as a class C frequency doubler and the output of the driver covers the frequency range of 100 to 225 mc. The output of the driver is applied to the rf tuner. Paragraph 220 contains the theory of operation of the driver stage.

194. Functioning of Rf Tuners

a. General. Two types of rf tuners are available at present. One tuner covers the B-band and one the C-band. These tuners are plug-in units and are interchangeable. Replacement of one type of rf tuner with the other type changes the output frequency of the transmitter. A- and D-band rf tuners are not available at present; therefore, only the B-band and C-band tuners will be described.

b. Transmitter B-Band and Rf Tuner. Radio Frequency Amplifier AM–912/TRC is the transmitter B-band tuner. The B-band rf tuner consists of one power amplifier that operates at the same frequency as the driver. The power-amplifier grid and plate circuits are tuned with adjustable cavity resonators. The detailed analysis of the B-band tuner is contained in paragraph 221.

c. Transmitter C-Band Rf Tuner. Radio Frequency Amplifier-Multiplier AM–915/TRC is the transmitter C-band rf tuner. When this C-band tuner is plugged into the circuit (on the block diagram, this tuner is shown as the alternate plug-in unit), the output of the driver is applied to the frequency-doubler stage of the tuner. When the transmitter is operating in the C-band, the driver is not tuned over its full range. The output frequency of the driver on the C-band covers only the portion of the driver tuning range that is between 112.5 and 200 mc. The output of the tuner frequency-doubler tube V1 is twice the frequency of its input and therefore covers the range of 225 to 400 mc. This output is applied to the power-amplifier stage, tube V2. A detailed description of the C-band tuner is given in paragraphs 222 through 224.

195. Functioning of Band-Pass Filters

a. The band-pass filter provides the necessary selectivity to reduce unwanted transmissions from the transmitter. Each of the 12 band-pass filters consists of 2 independently tuned, inductively coupled cavity-resonator circuits. Six of the band-pass filters are supplied to cover the B-band and six for the C-band. Each of the band-pass filters is tunable within a different portion of the B- or C-band. The theory of operation of the band-pass filters is discussed in paragraph 225.

b. When it is not necessary to filter the output, the band-pass filter may be replaced by the dummy filter. The dummy filter consists of a section of coaxial cable, which connects the output of the rf tuner to the directional coupler. The dummy filter has no selective properties but causes less loss to the desired signal than the tuned band-pass filter.

196. Functioning of Directional Coupler

The output of the band-pass filter (or dummy filter when used) is connected through the directional coupler to the transmitting antenna. A small portion of output power is tapped off at two points within the directional coupler and is rectified to provide voltages that are proportional to forward power and reflected power. The forward-power voltage is applied to the low-power alarm circuit (par. 212). The forward- and reflected-power voltages are connected to the TEST meter circuits (par. 211). For simplicity, the inputs to meter circuits are omitted on the block diagram of the transmitter circuits (fig. 136).

197. Functioning of Antenna

The transmitting antenna is identical with the receiving antenna and may be mounted on the same mast with it. Each antenna consists of a pair of adjustable dipoles on a plane reflector. Different dipoles are used for the B-band and the C-band. The dipoles and the reflector may be rotated for either vertical or horizontal polarization.

381345 O—56——14

198. Functioning of Afc Circuits

a. The function of the afc system is to control the base rf oscillator frequency in such a way as to maintain an exact base frequency. A simplified block diagram of the afc circuit is shown in figure 137.

b. The pulse generator, which is synchronized by the crystal oscillator, furnishes a crystal-controlled reference frequency with which the base rf oscillator frequency is compared. If the base rf oscillator is exactly on frequency, the output of the afc mixer will be 10.125 mc, the frequency to which the afc discriminator is tuned. Therefore, there will be no output from the afc discriminator. However, if the base rf oscillator center frequency drifts off frequency, the output of the mixer will be either above or below 10.125 mc, depending on the direction in which the frequency drifts. The afc discriminator produces a positive or negative dc voltage that is proportional to the frequency drift. This error voltage controls oscillator tuning to correct the oscillator frequency.

c. The afc circuits are used to tune the base rf oscillator, as well as to keep it tuned automatically. In the detailed block diagram discussion of the afc circuits (pars. 199–204), only the automatic-frequency-control function will be discussed. Examples given will be based on the assumption that the transmitter is to operate on frequency channel 124. The other functions of the afc circuits are described briefly in paragraph 208.

199. Functioning of Crystal Oscillator

a. General. The crystal oscillator, tube V114, produces any one of three frequencies (2.5 mc, 1.0 mc, and 10.125 mc) as determined by the position of the XTAL SEL switch. The 2.5-mc output is used during the tuning of the base rf oscillator; the 1.0-mc output is used both for tuning and for maintaining the tuning of the base rf oscillator; the 10.125-mc output is used to tune the afc discriminator. Only the use of the 1.0-mc output for afc will be discussed in *b.* below.

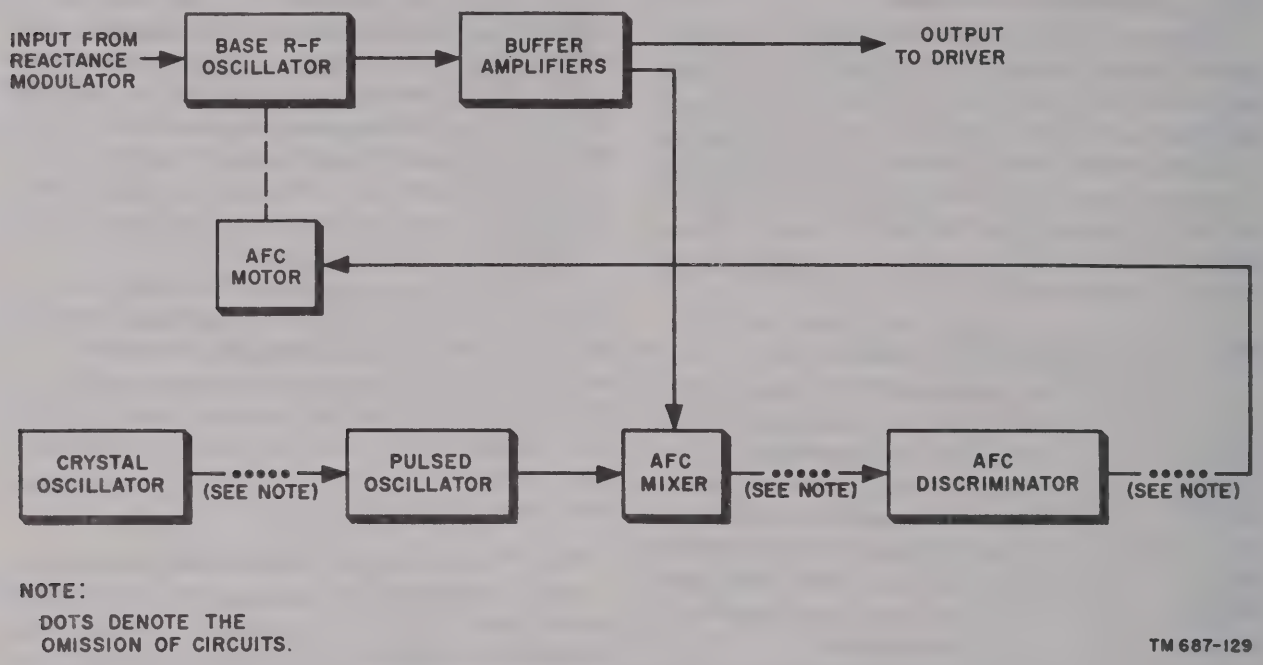

Figure 137. Afc circuits, block diagram.

b. 1.0-mc Output. The crystal oscillator is a two-stage feedback oscillator. When the XTAL SEL switch is in the UNIT CHANS position, the 1.0-mc crystal is connected in the circuit and the crystal oscillator produces an output of 1.0 mc. This output is applied to and synchronizes the .5-mc pulse generator. The frequency of .5 mc corresponds to the difference in base rf oscillator frequency for adjacent odd or even rf channels. For example, the base rf oscillator frequency of 80.375 mc

at rf channel 122 is .5 mc below its frequency of 80.875 mc at rf channel 124, which is the higher adjacent even channel.

200. Functioning of .5-mc Pulse Generator

The 1.0-mc output of the crystal oscillator is applied to the grid of the .5-mc pulse generator, tube V113. This pulse generator is a blocking oscillator, the natural repetition rate of which is slightly lower than .5 mc. The applied 1.0-mc signal synchronizes the blocking oscillator so that the pulse-repetition rate is exactly half of the applied frequency. The .5-mc output is applied to the cathode follower.

201. Functioning of the Cathode Follower

The main purpose of the cathode follower, tube V116A, is to match the high-impedance output of the pulse generator to the low-impedance input of the pulsed oscillator. The output of the cathode follower is clipped so that the peaks of the positive pulses are not applied to the grid of the pulsed oscillator.

202. Functioning of Pulsed Oscillator

a. The pulsed oscillator is tuned to a frequency which, for even-numbered rf channels, is 10.125 mc above the base rf oscillator frequency and for odd-numbered rf channels, is 10.125 mc below the base rf oscillator frequency. For example, on channel 123, an odd-numbered channel, the base rf oscillator frequency is 80.625 mc and the pulsed-oscillator frequency is 70.500 mc; on channel 124, an even-numbered channel, the base rf oscillator frequency is 80.875 mc and the pulsed-oscillator frequency is 91.000 mc.

b. The pulsed oscillator, tube V116B, is a tuned regenerative amplifier using a modified Colpitts circuit. The input positive pulses trigger the pulsed oscillator. The input pulse, which is rich in harmonics, is amplified and the harmonics at or near the frequency to which the pulsed oscillator is tuned are fed back regeneratively. The output of the pulsed oscillator therefore contains harmonics of the pulse-repetition rate (.5 mc). The desired output for operation on frequency channel 124 is the 182d harmonic of .5 mc, or 91.000 mc. This is the harmonic to which the pulsed oscillator is tuned and, because of regeneration, the output at this frequency is larger than at other harmonic frequencies.

203. Functioning of Afc Mixer

a. General. There are two inputs to the grid of tube V117, the afc mixer. One of these is the pulsed-oscillator output, which contains several of the harmonics of .5 mc. The other input is a portion of the output of the buffer amplifiers, which is at the base rf oscillator frequency. If the base rf oscillator is on frequency, a difference frequency of 10.125 mc will be produced by the mixing of the base rf oscillator frequency and the desired harmonic output of the pulsed oscillator. The difference frequencies produced by the mixing of the base rf oscillator frequency and the other harmonic outputs of the pulsed oscillator are either too high or too low to be amplified by the 10.125-mc afc if. amplifiers; these difference frequencies will not be discussed.

b. Even-Channel Operation. When the transmitter is operating on an even-numbered rf channel, the pulsed oscillator is tuned above the base rf oscillator frequency. If the base rf oscillator center frequency increases, the difference frequency produced in the mixer will be less than 10.125 mc by an amount equal to the frequency drift. Similarly, a decrease in the oscillator center frequency will cause an equal increase in the mixer output frequency.

c. Odd-Channel Operation. For odd-channel operation, the pulsed oscillator is tuned below the base rf oscillator frequency. If the base rf oscillator center frequency increases, the difference frequency produced in the mixer will be greater than 10.125 mc by an amount equal to the frequency drift. Similarly, a decrease in the oscillator center frequency will cause a decrease in the mixer output frequency. It will be noticed that frequency drift has opposite effects on the mixer output frequency for odd- and even-channel operation.

d. Mixer Output Signal. Because the base rf frequency is frequency-modulated, the output of the mixer is also a frequency-modulated signal. The center frequency of the fm mixer output is 10.125 mc if the base rf oscillator is on frequency.

204. Functioning of Afc If. Amplifiers and Afc Limiters

a. The output of the afc mixer is applied to the grid of tube V118, the first of three afc if. amplifier stages each of which is tuned to 10.125 mc. The if. amplifiers amplify the de-

sired mixer output; that is, the output of which the center frequency is near 10.125 mc. Harmonic outputs of the mixer (par. 203*a*) are not amplified by, and are not present in the output of, the if. amplifiers.

b. The output of the third if. amplifier is applied to the first of two limiter stages. The output of the second limiter is practically free of amplitude-modulation effects.

205. Functioning of Afc Discriminator and FREQ DRIFT Meter

a. Afc Discriminator. The output of the afc discriminator tube, V123, is a dc voltage with an ac component. The ac component is proportional to the modulating signal applied to the reactance modulator (par. 190). The ac component is measured to permit adjustment of the input signal level to the reactance modulator. The dc voltage is proportional to the frequency drift of the base rf oscillator. When there is no frequency drift, the dc voltage is zero; when frequency drift occurs, the dc voltage is either positive or negative, depending on the direction in which the frequency has drifted. This dc voltage is applied to the FREQ DRIFT meter and, when the AFC switch is in the ON position, to the 60-cps modulator.

b. FREQ DRIFT Meter. The FREQ DRIFT meter, M103, is a zero-center dc meter. The dc output of the afc discriminator is applied to the FREQ DRIFT meter. The reading on this meter is proportional to the frequency drift. The meter circuit is arranged so that a reading to the right of zero indicates an increase in the base rf oscillator center frequency, and a reading to the left of zero indicates a decrease in the base rf oscillator center frequency. Thus, the FREQ DRIFT meter provides an indication for tuning the base rf oscillator and an indication of the operation of the afc circuits.

206. Functioning of 60-cps Modulator and Amplifier

a. Transmitter 60-cps Modulator. The dc output from the afc discriminator is applied to the grid of one-half of twin triode V124. The grid of the other section of tube V124 is at ground potential. A 60-cps voltage is applied to the cathode of both sections and the plates are connected to a push-pull output circuit. The 60-cps modulator produces a 60-cps output the magnitude of which is proportional to the dc output of the afc discriminator and the phase of which is either 90° leading or 90° lagging the 115-volt ac voltage that is applied to the afc motor (par. 207). The phase of the modulator output depends on the polarity of the afc modulator dc output. When the AFC switch is in the OFF position, the dc output of the discriminator is not applied to the 60-cps modulator and there is no output from the modulator. The detailed theory of operation of the 60-cps modulator is described in paragraph 240.

b. Transmitter 60-cps Amplifier. The transmitter 60-cps amplifier is a two-stage feedback amplifier which provides the proper output to drive the afc motor. A detailed description of the 60-cps amplifier is contained in paragraph 241.

207. Functioning of Transmitter Afc Motor

a. The afc motor is a two-phase ac motor, which is mechanically connected to a variable trimmer capacitor in the base rf oscillator tuned circuit. The motor controls the base rf oscillator center frequency by adjusting the trimmer capacitor.

b. The first field winding of the two-phase motor is connected to 115 volts ac from the power supply. The second field winding is connected to the output of the transmitter 60-cps amplifier. The direction of rotation of the motor is determined by the phase of the voltage applied to the second field winding relative to the voltage applied to the first. The speed of rotation is determined by the amplitude of the voltage applied to the second field winding.

(1) When the base rf oscillator is on frequency, the difference frequency produced in the afc mixer, 10.125 mc, is equal to the frequency to which the afc discriminator is tuned. Therefore, there is no dc output from the discriminator, no 60-cps output from the 60-cps modulator, and no output to the second field winding of the afc motor. As a result, the afc motor does not rotate and there is no adjustment of the base rf oscillator frequency.

(2) When the frequency drifts, the difference frequency produced in the afc mixer will differ from 10.125 mc; therefore, a dc voltage will be present in the output of the afc discriminator.

The output of the 60-cps modulator is a 60-cps voltage the phase of which is determined by the polarity of the discriminator output. The modulator output is amplified and applied to the second field winding of the afc motor. The afc motor rotates the trimmer capacitor in the direction determined by the phase of the modulator output, returning the base rf oscillator to the desired center frequency.

208. Other Functions of Afc Circuits

In addition to maintaining the base rf oscillator frequency automatically, the afc circuits supply the necessary information to tune the base rf oscillator to a particular frequency. The afc circuits also contain provisions for tuning the afc discriminator to 10.125 mc.

a. Discriminator Tuning. When the XTAL SEL switch is in the DISCR CENTER position, the crystal oscillator produces an output of 10.125 mc. This is the frequency to which the afc if. amplifiers are tuned. The crystal-oscillator output is fed through the afc if. amplifier, the afc limiters, and the afc discriminator. This output permits the correct adjustment of the afc discriminator tuning. If the afc discriminator is tuned accurately to the incoming frequency of 10.125 mc, there will be no dc output from the discriminator. However, if the afc discriminator is detuned, there will be a dc output and this output will be indicated on the transmitter FREQ DRIFT meter. The DISCR CENTER control is adjusted to tune the afc discriminator to 10.125 mc; a zero reading on the FREQ DRIFT meter of the transmitter indicates correct adjustment.

b. Base Rf Oscillator Tuning.

(1) When the XTAL SEL switch is in the DECADE CHANS position, the crystal oscillator generates an output of 2. 5mc. This frequency corresponds to the difference in base rf oscillator frequencies for successive odd or even decade channels. For example, the base rf oscillator frequency of 79.875 mc for channel 120 is 2.5 mc less than its frequency of 82.375 mc for channel 130, which is the next even decade channel. It will be seen in (2) below that the 2.5-mc output is used when tuning the base rf oscillator to a decade channel.

(2) The 2.5-mc output of the crystal oscillator is applied to the 2.5-mc pulse generator, tube V115. This pulse generator has a saturable-reactor circuit that produces one pulse during each half-cycle of the applied voltage. The output of this pulse generator consists of positive and negative pulses with a pulse-repetition rate of 2.5 mc. The output of the 2.5-mc pulse generator is applied through the cathode follower to the pulsed oscillator. The positive pulses trigger the pulsed oscillator. The output of the pulsed oscillator contains a pulse-repetition-rate harmonic that is either 10.125 mc below or 10.125 mc above the base rf oscillator frequency for a decade channel. With the AFC switch in the OFF position, the afc motor does not operate, and the base rf oscillator may be manually and accurately tuned to the desired decade channel using the rectified output of the third afc if. amplifier and the FREQ DRIFT meter zero reading as tuning indications. The base rf oscillator then is tuned to the desired unit channel with the XTAL SEL switch in the UNIT CHANS.

209. Functioning of Transmitter MEASURE Meter Circuit

The transmitter MEASURE meter circuit measures various signal levels in the transmitter. These measurements permit the adjustment of many of the operating controls of the transmitter. The transmitter MEASURE switch determines the input to the transmitter MEASURE meter circuit. Paragraph 242 describes the theory of operation of the transmitter MEASURE meter circuit.

210. Functioning of 1-kc Oscillator

The 1-kc oscillator tube V104B, operates in only three positions of the transmitter MEASURE switch. The output of the 1-kc oscillator is adjustable to a standard output level. The adjusted output of the 1-kc oscillator is the reference signal used to calibrate the amplifiers of the transmitter and receiver MEASURE

meter circuits, and to adjust the level of modulation in the transmitter. The theory of operation of the 1-kc oscillator is contained in paragraph 243.

211. Functioning of TEST Meter Circuit

The TEST switch connects the TEST meter, M102, to the reactance modulator, driver, or rf tuner stages to measure grid, cathode, or plate current. The measurements are useful as tuning indications and as indications of proper operation. In addition, the TEST switch connects the TEST meter to measure forward power or reflected power. A detailed description of the TEST meter circuit is contained in paragraph 245.

212. Functioning of Low-Power Alarm

The low-power alarm is coupled to the transmitter rf power output through the directional coupler (par. 196). The directional coupler produces a rectified current that is proportional to the rf power flowing to the antenna. When the rectified current decreases to too low a value, indicating a failure in the rf power output of the transmitter, the relay in the alarm amplifier circuit closes the circuit to the buzzer and LOW PWR ALARM lamp, which provides audible and visual indications of the decrease in rf output power. The low-power alarm is described in detail in paragraph 244.

213. Functioning of Transmitter Power Supply

The voltages required for the operation of the radio transmitter are obtained by use of Switch Box SH–331/U, Interconnecting Box J–532/U, Autotransformer Fixed Power Transformer TF–167/TRC, and Power Supply PP–685/TRC.

a. Switch Box. Two power sources of either 115 volts or 230 volts ac can be connected to the switch box. The POWER SUPPLY switch is operated when it is desired to transfer from one of two equal power sources to the other without interrupting operation. To prevent the possibility that the switch will disconnect a source of 115 volts and connect, in its place, a source of 230 volts, two sources of different voltage outputs must not be connected to the switch box. The output of the switch box is at the same voltage as the source and is applied to the interconnecting box.

b. Interconnecting Box. The ac input voltage to the interconnecting box may vary slightly at either 115 volts or 230 volts, depending on the source voltage. A bus bar link in the interconnecting box is connected differently for 115-volt and 230-volt inputs so that the power correct voltage is applied to the autotransformer.

c. Autotransformer TE–167/TRC. The autotransformer provides an adjustable 115-volt ac output from either a nominal 115-volt or 230-volt ac input. The adjustable 115-volt output is applied to Power Supply PP–685/TRC and to the receiver power supply.

d. Power Supply PP–685/TRC. This power supply unit contains the rectifier, filter, and voltage-regulator circuits needed to supply the following voltages:

(1) A high-voltage unregulated dc output is provided for the plates of the driver and rf tuners. This voltage is adjustable from +300 to +900 volts and is normally adjusted to 750 volts for operation in the C-band and 850 volts for operation in the B-band. This voltage output is referred to as the 750-volt output.

(2) A regulated dc voltage is provided for the screen grids of the rf tuners. This voltage can be adjusted from +200 to +350 volts. This voltage output normally is referred to as the 275-volt output.

(3) A +250-volt unregulated dc output is provided for the cathode-follower and low-power alarm circuits.

(4) A +150-volt regulated dc output is provided for the plates and screen grids of all of the remaining stages in the radio transmitter.

(5) A −12-volt unregulated dc output is provided for the handset transmitter, for the interlock circuit, and for the time-delay circuit, which delays application of plate voltage to the 750-volt rectifier tubes sufficiently to permit the heating of the rectifier filaments.

(6) Two ac filament voltages, 2.5 and 6.3 volts, are provided for the tubes of the radio transmitter.

(7) An output of 115 volts ac is applied to the transmitter blower motor. This output is applied also to the receiver power supply.

214. Input Circuits

The schematic diagram of the input circuits of the radio transmitter is shown in figure 138. A brief description of the input circuits, based on the block diagram, is contained in paragraph 188.

a. Switch 600 OHMS–135 OHMS. The input base-band signal from the spiral-four cable is applied to the circuits of the radio transmitter through a portion of Radio Receiver R–417/TRC. Lightning arresters E156 and E157 short to ground any high voltages (exceeding 500 volts peak) that have been induced in the spiral-four cable by lightning or other causes. The 600 OHMS–135 OHMS switch applies the base-band signal across all or part of the primary windings of transformer T101 in order to match the impedance of the spiral-four cable to the input impedance of filter FL101. In the 600 OHMS position, the switch connects the signal to terminals 1 and 6 of the input transformer. In the 135 OHMS position, the switch connects the signal to terminals 2 and 5.

b. Low-Pass Filter. The base-band signal is applied from secondary windings 7–8 of transformer T101 to terminals 1 and 2 of filter FL101, which is a low-pass filter. This filter passes all signals in the frequency range up to 68 kc but rejects all signals above 68 kc to eliminate undesired signals from the input to the base-band amplifier.

c. INPUT ADJ Potentiometer. The output of the low-pass filter is applied across the INPUT ADJ potentiometer, R101. All frequencies of the signal are attenuated equally by the potentiometer by an amount determined by the setting of the INPUT ADJ control. When the control is set to OFF, there is no input to the base-band amplifier; when the control is set to 30, maximum signal is applied to the base-band amplifier. The signal at the variable contact of potentiometer R101 is applied to the MEASURE meter circuit (par. 209) in order to measure the signal level and to adjust the INPUT ADJ control for a measurement of 0 db.

d. Pre-emphasis Circuit. The signal from the variable contact of the INPUT ADJ potentiometer is applied across a voltage divider that consists of the parallel combination of resistor R103 and capacitor C101 and the series resistance of potentiometer R104.

(1) For frequencies below 5 kc, capacitor C101 has a relatively high impedance, and therefore, its shunting effect on resistor R103 is negligible. At these frequencies, approximately one-eighth of the signal voltage existing at the output of the INPUT ADJ potentiometer appears across potentiometer

(2) At frequencies above 5 kc, the impedance of the parallel combination of resistor R103 and capacitor C101 decreases with increasing frequency. At 68 kc, approximately one-fourth of the signal voltage existing at the output of the INPUT ADJ potentiometer appears across potentiometer R104.

(3) The effect of the pre-emphasis circuit is to attenuate the low frequencies (frequencies below 5 kc) more than the high frequencies (frequencies above 5 kc). Emphasis is placed on the higher frequencies since noise generated in electronic circuits is greater at these frequencies. By increasing the high-frequency signals applied to R104 and then decreasing them ((4) below), an undistorted signal with a minimum amount of noise is obtained.

(4) The variations of signal level with frequency that are introduced by the pre-emphasis circuit are compensated for by a de-emphasis circuit in the receiver (par. 286*f*).

e. MOD ADJ Potentiometer. Potentiometer R104 is the MOD ADJ potentiometer. Adjustment of the MOD ADJ control sets the level of the input signal to the base-band amplifiers and also the input to the reactance modulator. Thus, the setting of potentiometer R104 controls the modulation level. The adjusted output from the 1-kc oscillator (par. 243) is applied across the MOD ADJ potentiometer to provide a reference modulating tone used to adjust the potentiometer.

215. Base-Band Amplifier

(fig. 139)

a. First Base-Band Amplifier.

(1) The signal at the variable contact of the MOD ADJ potentiometer is applied to the grid of tube V101. The amplified voltage that appears at the

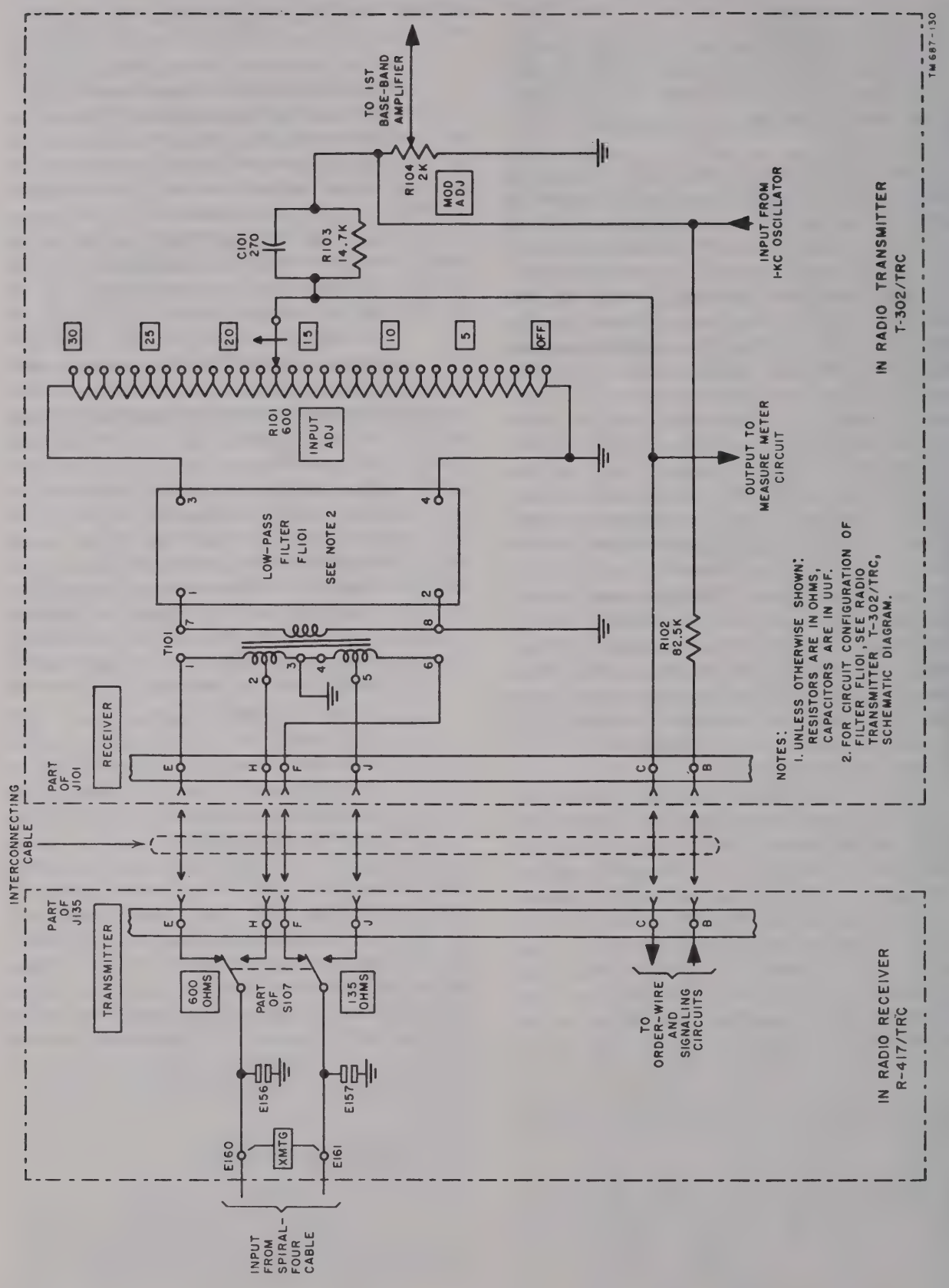

Figure 138. Input circuits.

plate of the tube V101 is developed across plate load resistor R101. R104.

(2) Screen voltage is supplied to the screen grid through dropping resistor R109 and parasitic suppressor R108. Capacitor C105 bypasses ac screen-grid current to ground.

(3) Cathode bias is developed across unbypassed resistor R105. The negative feedback voltage (*d* below) from the third base-band amplifier also is applied to the cathode at resistor R105.

b. Second Base-Band Amplifier.

(1) The output signal from the first base-band amplifier is coupled through capacitor C106, is developed across grid-leak resistor R111, and is applied to the grid of tube V102A through parasitic suppressor R112. The amplified voltage is developed across plate load resistor R114.

c. Third Base-Band Amplifier. The third base-band amplifier is a single-tube paraphrase amplifier that provides two balanced outputs that are 180° out of phase with each other.

(1) The output signal from the second base-band amplifier is coupled through capacitor C107, is developed across grid-leak resistor R118, and is applied to the grid of tube V102B. There are two load resistors, R119 in the cathode circuit and R120 in the plate circuit. Half of the total output is developed across each of these resistors, and the voltage across resistor R119 is 180° out of phase with the voltage across resistor R120. The outputs are applied to the reactance modulator stage through coupling capacitors C108 and C109.

(2) Resistors R115, R116, R117, and R118 form a voltage-divider network, which is connected between +150 volts and

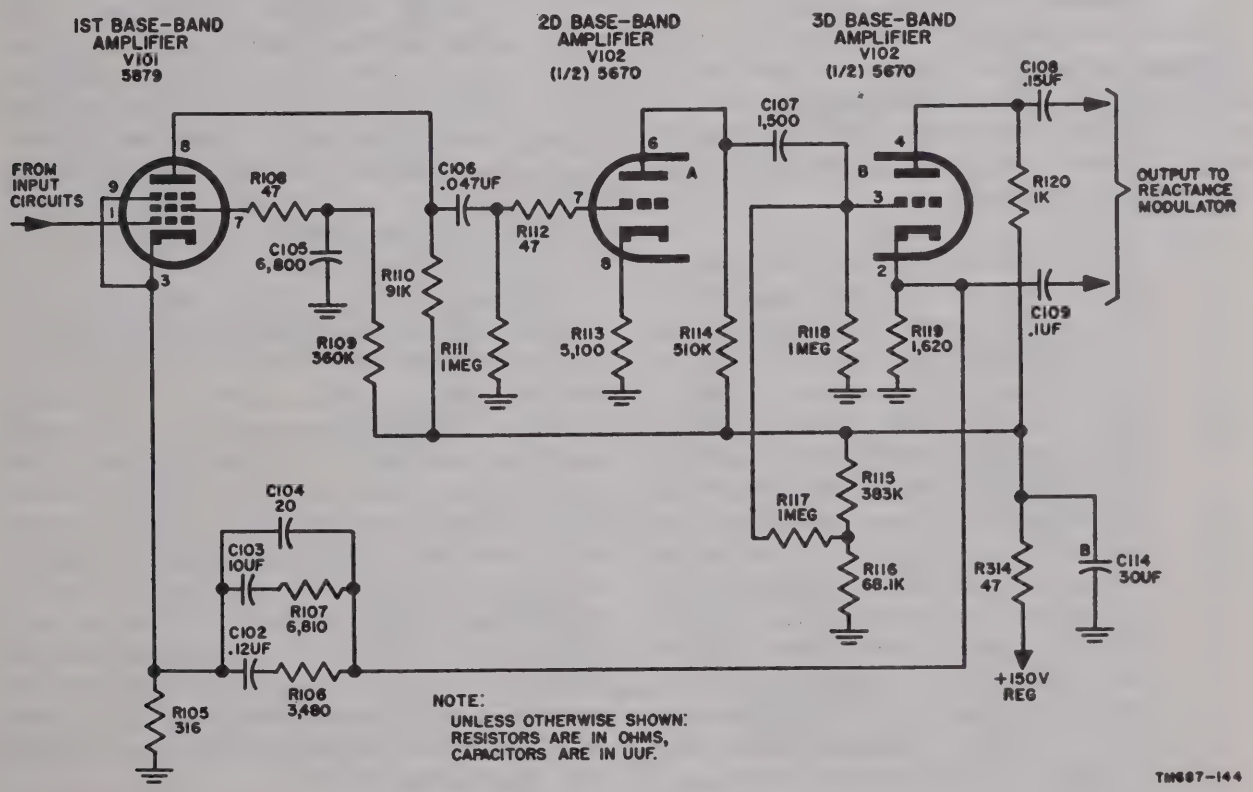

Figure 139. Base-band amplifiers.

(2) Cathode bias is developed across unbypassed resistor R113. The resistor is unbypassed to introduce degeneration for stage stability.

ground to supply a small positive voltage for the grid of the tube V102B. This positive voltage is smaller than the bias voltage developed across

cathode resistor R119, thus the resulting grid-to-cathode voltage is negative.

(3) Plate voltage for tubes V101 and V102 and screen voltage for tube V101 are supplied through the decoupling filter consisting of resistor R314 and capacitor C114B.

d. Feedback Network. A portion of the output signal voltage developed across cathode resistor R119 is applied to the cathode of tube V101 through the feedback network, which consists of resistors R106 and R107 and capacitors C102, C103, and C104. The feedback is degenerative and serves to reduce distortion and to stabilize the gain of the base-band amplifier. The feedback network, because of the capacitive elements, feeds back more voltage at higher frequencies to prevent high-frequency oscillations.

216. Reactance Modulator
(figs. 140 and 141)

The two out-of-phase outputs from the third base-band amplifier are applied to the control grids of the two tubes of the reactance modulator. A portion of the base rf oscillator output also is applied to the control grids of the reactance modulator tubes.

a. Rf Input.

(1) The rf voltage from the base rf oscillator is coupled through a phase-shifting network consisting of capacitors C307 and C308 and resistor R324 to the tuned circuit consisting of capacitors C131 (the MOD TRIM control), C133, and C134 and inductor L103A, which is one section of a four-section ganged tuning inductance. The tuned circuit appears resistive at the radio frequency and because of the high capacitive reactance of the phase-shifting network, the voltage applied to the tuned circuit leads the base rf oscillator voltage by 90°. This tuned-circuit voltage is applied to the grid of tube V105 through coupling capacitor C129.

(2) In some rf exciters, the reactance modulator circuit is as shown in figure 141. In this circuit, the tuned-circuit voltage is applied to the grid of tube V106 through coupling capacitor C130 and parasitic suppressor R149.

(3) In figure 140, the center of the tuned circuit is grounded and the voltage at the bottom of the tuned circuit is 180° out of phase with the voltage at the top. Therefore, the rf voltage at the bottom of the tuned circuit lags the base rf oscillator voltage by 90°. This tuned circuit voltage is applied to the grid of tube V106 through coupling capacitor C130.

(4) In the reactance modulator shown in figure 141, the center of the tuned circuit is grounded, and the voltage at the top of the tuned circuit is 180° out of phase with the voltage applied at the bottom. The voltage applied to the bottom leads the base rf oscillator voltage by 90° (par. 216*a*(1)) and the rf voltage at the top of tuned circuit lags the base rf oscillator voltage by 90°. The voltage at the top of the tuned circuit is applied to the grid of tube V105 through coupling capacitor C129 and parasitic suppressor R148. Therefore, the voltages applied to tubes V106 and V105 are 90° out of phase with the base rf oscillator, and also 180° out of phase with each other.

b. Base-Band Input. The signal from the plate circuit of the third base-band amplifier is applied to the grid of tube V105 through the low-pass filter, which consists of capacitors C124 and C125 and inductor L101, and through isolating resistor R146. The low-pass filter prevents the output circuit of the third base-band amplifier from loading the tuned circuit of the reactance modulator. The isolating resistor prevents the low-pass filter from detuning the tuned circuit. The signal from the cathode circuit of the third base-band amplifier is applied to the grid of tube V106 through the low-pass filter, which consists of capacitors C123 and C126 and inductor L102, and through isolating resistor R147.

c. Circuit Operation (fig. 142). The effect of the base-band signal is similar to that of a relatively slowly changing bias because the rate of change of the base-band voltage is very much lower than that of the rf voltage. The rf voltage applied to the control grids are 90°

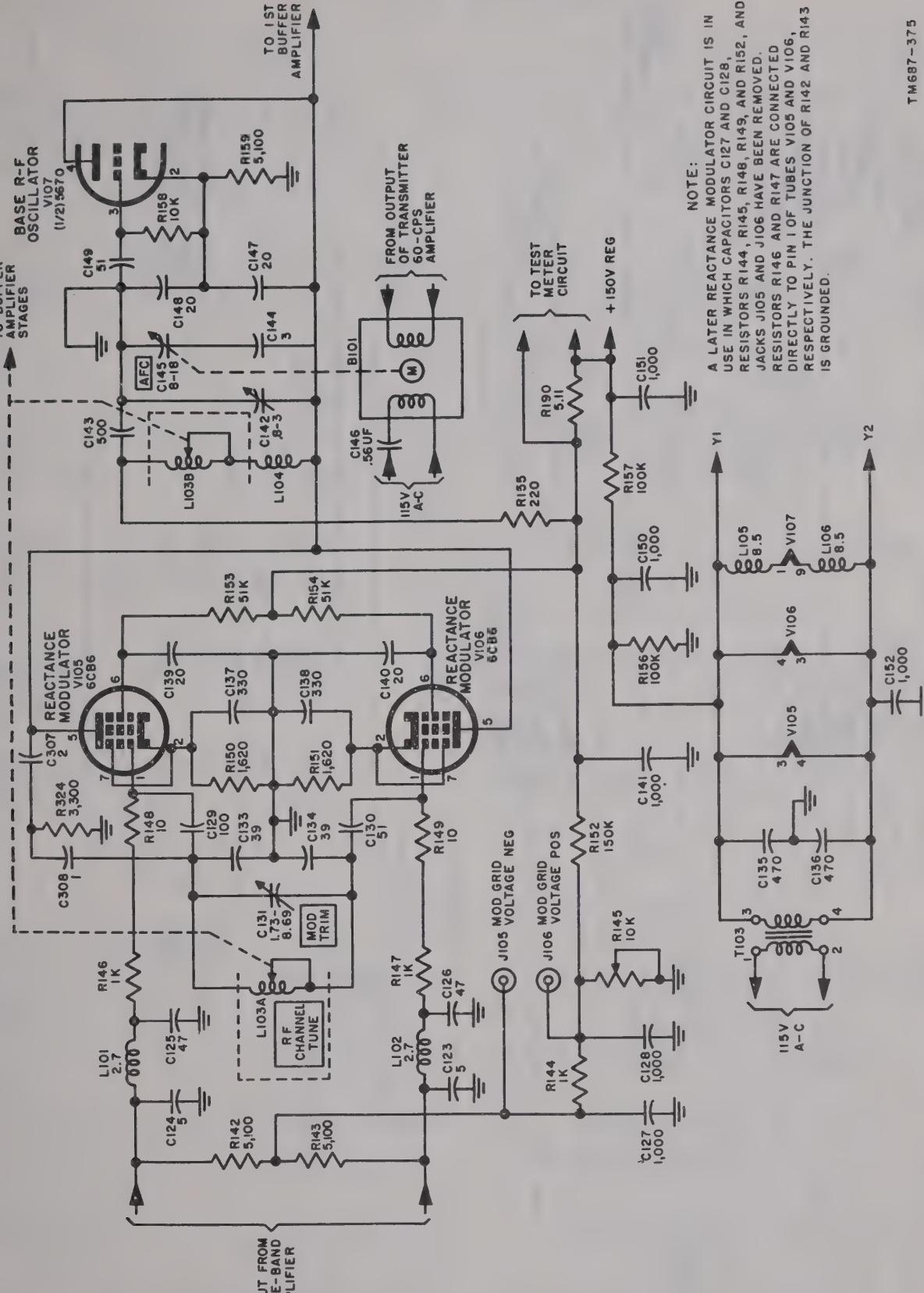

Figure 140. Modified reactance modulator and base rf oscillator (also effective with serial number 1 of Order No. 32146-Phila-51).

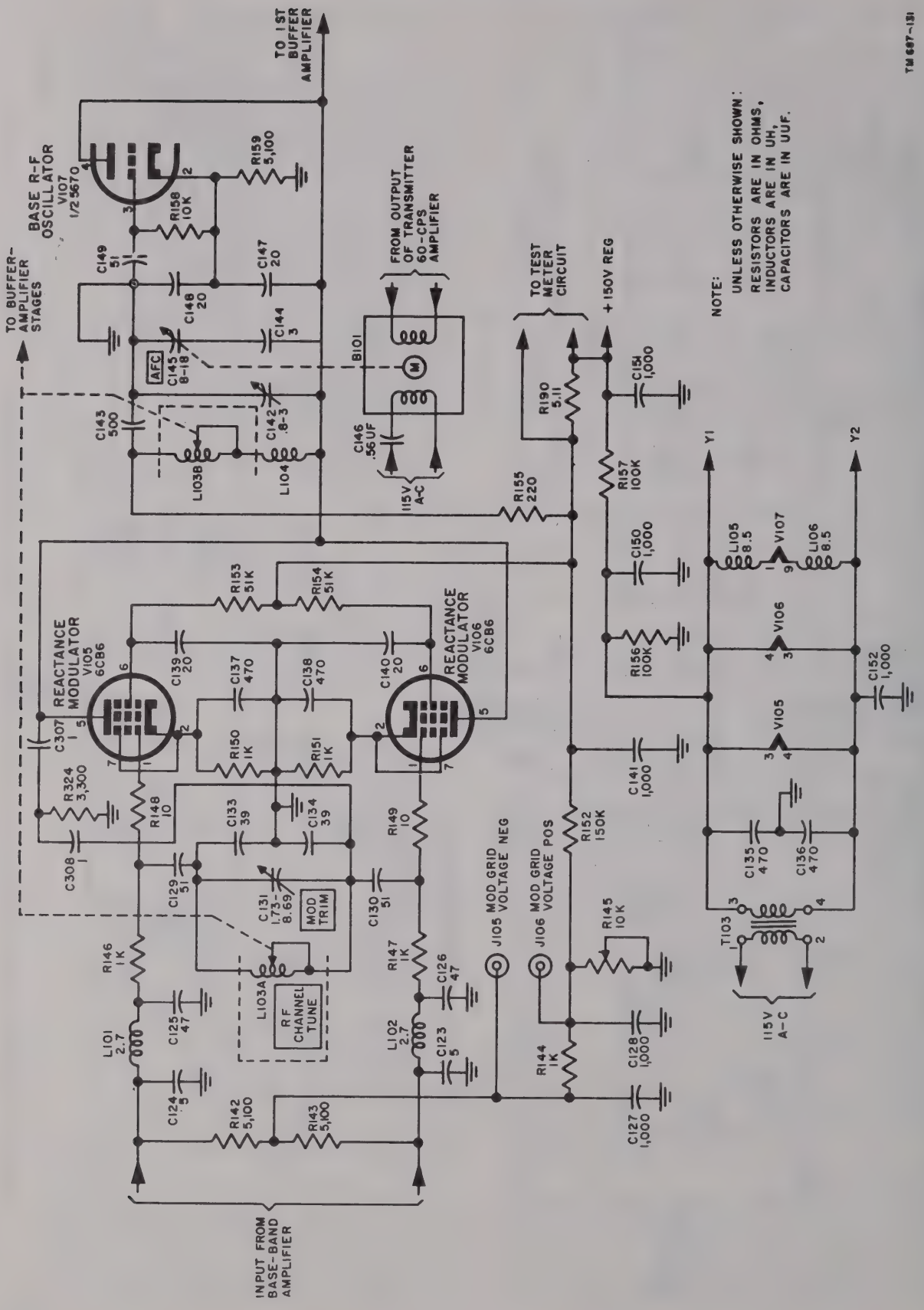

Figure 141. Reactance modulator and base rf oscillator (Order No. 16811-Phila-51).

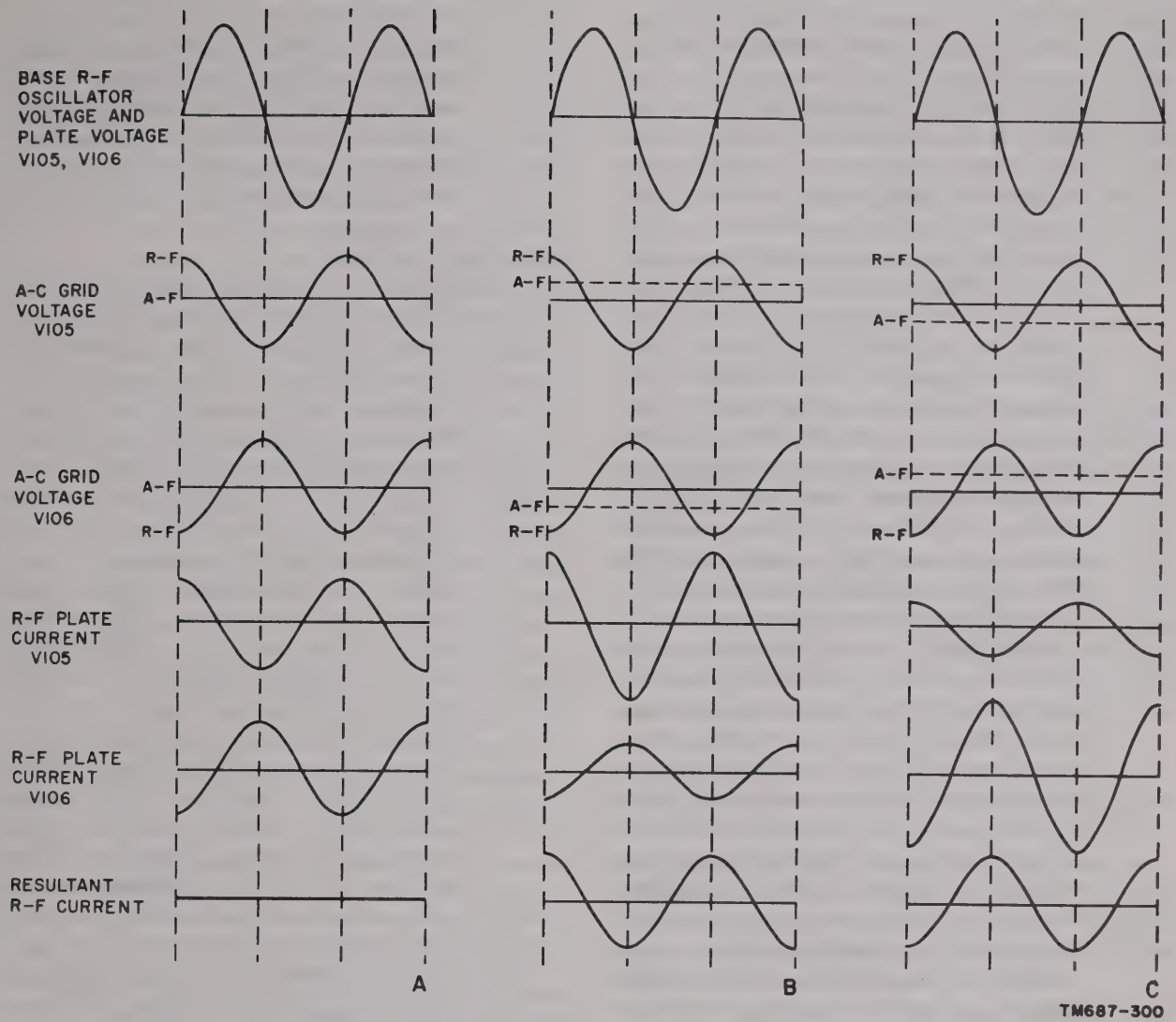

Figure 142. Reactance modulator, current and voltage wave forms.

out of phase with the base rf oscillator voltage and 180° out of phase with each other. The current in each tube is in phase with the rf grid voltage and the magnitude of the rf current depends on the instantaneous base-band voltage, which can be assumed to remain constant during an rf cycle. The plates of the two tubes are connected together and the currents of the two tubes are combined and pass through the tuned circuit of the base rf oscillator.

Note. The information in *c*(2), (3), and (4) below applies to the modulator circuit shown in figure 141 if V105 is changed to V106, and V106 is changed to V105.

(1) When there is no base-band signal (A, fig. 142) or when the base-band signal is passing through zero, the bias on both reactance modulator tubes is equal and the rf currents in these tubes are equal in magnitude and 180° out of phase. Therefore, the rf components of the plate currents cancel each other and only direct current flows to the tuned circuit of the base rf oscillator. The base rf oscillator operates at its center frequency.

(2) When the base-band signal causes the grid of tube V105 to become positive and the grid of tube V106 to become negative (relative to the dc grid voltage) (B, fig. 142) tube V105 draws more current than tube V106. Thus, the rf current in tube V105, which leads the base rf oscillator voltage by 90°, exceeds the rf current in tube

V106, which lags the base rf oscillator voltage by 90°. Therefore the resultant (combined) rf plate current leads the base rf oscillator voltage by 90°. The magnitude of the resultant rf current depends on the difference in the bias voltages at the two control grids, which is determined by the magnitude of the applied base-band signal. The phase of resultant current causes the reactance modulator stage to appear as a capacitor connected across the tuned circuit of the base rf oscillator to reduce the frequency of the base rf oscillator. The larger the magnitude of the applied base-band signal, the larger the effective capacitance of the reactance modulator and, hence, the larger the decrease in oscillator frequency.

(3) When the base-band signal causes the grid of tube V105 to become negative and the grid of tube V106 to become positive (relative to the dc grid voltage) (C, fig. 142), the resultant current lags the base rf oscillator voltage by 90° and the reactance modulator appears to be an inductor that is connected across the tuned circuit of the base rf oscillator. Thus, the total inductance of the tuned circuit decreases and the frequency increases. The larger the magnitude of the applied base-band signal, the larger the effective inductance of the reactance modulator and, hence, the larger the increase in oscillator frequency.

(4) The effect of the reactance modulator stage is to change the base rf oscillator tuning continuously in accordance with the applied base-band signal. The base rf oscillator frequency operates at its center frequency when no base-band signal is applied. The magnitude of the instantaneous frequency deviation is proportional to the amplitude of the applied base-band signal. That is, the larger the applied base-band signal, the larger the frequency deviation or difference between the base rf oscillator frequency and the center frequency. The polarity of the base-band signal determines whether the base rf oscillator frequency is above or below the center frequency. When the potential on the grid of tube V106 is increasing, the oscillator frequency is increasing; when this grid potential is decreasing, the oscillator frequency is decreasing.

d. Dc Circuits.

(1) *Plate and screen-grid circuits.* The dc plate current in tube V105 is combined with the dc plate current in tubes V106 and V107 (fig. 140). The combined plate currents flow through inductors L104 and L103B, through resistors R155 and R190, to the +150-volt regulated supply. The voltage drop across resistor R190 provides an indication of the tube currents flowing in the reactance modulator and base rf oscillator stages. This voltage drop is measured on the TEST meter when the TEST switch is in the OSC MOD PLATE position. Dc screen-grid current from tube V105 flows through current-limiting resistor R153 and is combined with the dc screen-grid current from tube V106, which flows through current-limiting resistor R154. The combined screen-grid currents, in addition to the combined plate currents, flow through resistor R190 to the +150 volts regulated supply. Capacitors C139 and C140 bypass to ground the rf screen-grid currents for tubes V105 and V106, respectively. Capacitor C143 and resistor R155 form a plate decoupling network for tubes V105, V106, and V107.

(2) *Cathode and control-grid circuits.* The dc grid-to-cathode voltage is the resultant of three voltages: the cathode voltage, fixed positive grid voltage, and the grid-leak voltage. Cathode voltage for tube V105 is developed across resistor R150, which is bypassed by capacitor C137, and for tube V106 across resistor R151 which is bypassed by capacitor C138. The fixed positive grid voltage is obtained from the voltage divider consisting of fixed resistor R152 and variable resistor

R145. This voltage divider is connected between +150 volts and ground and is bypassed by capacitor C141. The voltage developed across resistor R145 is adjusted by varying its resistance. This voltage is applied through an resistance-capacitance (RC) filter, which consists of resistor R144 and capacitors C127 and C128, and through grid-leak resistor R142 to the grid circuit of tube V105, and through grid-leak resistor R143 to the grid circuit of tube V106. Positive peaks of the applied base-band signal cause grid current to flow to either coupling capacitor C108 or C109 (fig. 139). The capacitor discharges slightly between grid-current surges through the grid-leak resistor R142 or R143 (fig. 140) producing grid-leak bias. The dc grid current flows through resistor R144 of the RC filter; the negative voltage across resistor R144 is an indication of the grid current and hence of the drive to the reactance modulator. This voltage can be measured by connecting a vacuum-tube voltmeter between jacks J105 and J106.

Note. The voltage-divider circuit described above, which applies the adjustable positive dc voltage to the grids of tubes V105 and V106, and the associated test jacks J105 and J106 have been eliminated from later circuits and the junction of resistors R142 and R143 has been grounded (refer to the note on figure 140). In the unchanged reactance modulator circuit, during operation potentiometer R145 is set to the maximum clockwise position effectively connecting the junction of resistors R142 and R143 to ground. Thus, the permanent grounding of the resistor junction duplicates the actual operating conditions in previous modulator circuits.

e. Filament Circuit. The heaters of tubes V105 and V106 receive 6.3 volts ac and are held about +75 volts dc above ground.

(1) *Ac supply.* The heater voltage is obtained from secondary winding 3–4 of transformer T103. Each side of the 6.3-volt ac line is bypassed for rf by capacitors C135 and C136. The primary winding of transformer T103 is connected to 115 volts ac from Power Supply PP–685/TRC.

(2) *Dc supply.* The +75 volts dc is obtained from the +150-volt regulated supply through the RC filter, which consists of resistor R157 and capacitors C150 and C151. Resistor R156 is the bleeder resistor for this RC filter. The 75 volts keep the filaments at a more positive potential than the cathodes of tubes V105 and V106 to eliminate electronic coupling between filament and cathode.

217. Base Rf Oscillator
(fig. 140)

a. Tube V107 operates as a class C Colpitts oscillator. The frequency-determining portion of the oscillator is the tuned circuit, which consists of fixed capacitors C144, C147, and C148, trimmer capacitor C142, afc capacitor C145, padder inductor L104 and tuning inductor L103B. Inductor L103B is one section of the four-section inductor that is adjusted by the front panel RF CHANNEL TUNE control; the other sections are in the tuned circuits of the reactance modulator and the buffer-amplifier stages.

b. The ac plate current flows through capacitor C147 to the cathode and supplies energy to the tuned circuit. The dc plate current is combined with the plate currents of the reactance modulator (par. 216*d*(1)). Cathode resistor R159 provides the dc return to ground for the cathode of the oscillator. Capacitor C149 and resistor R158 provide grid-leak bias.

c. Padder inductor L104 and trimmer capacitor C142 cause the tuned circuit to track the RF CHANNEL TUNE dial. The afc capacitor can be varied by the front panel AFC control; normally, this capacitor is controlled continuously by the afc motor, B101, which in turn is controlled by the afc circuits. Through the control of the afc capacitor, the oscillator tuning is adjusted to compensate for frequency drift (change in the oscillator center frequency).

218. First Buffer Amplifier
(fig. 143)

a. The output of the base rf oscillator is fed to the first buffer amplifier. The purpose of the buffer stage is to provide sufficient rf excitation to following stages in the transmitter. Also, they serve to isolate the oscillator from

the driver and final stages so that tuning or load changes in these stages will not affect the oscillator frequency stability. Another function of the buffer stages is to reduce by limiter action any amplitude-modulation effects.

b. The output of the base rf oscillator is coupled through capacitor C153 to the grid of the first buffer amplifier, V108. The amplified signal is developed across the tuned plate circuit, which consists of variable inductor L103C, fixed inductor L107, fixed capacitor C161, trimmer capacitor C163, and resistor R163. Variable inductor L103C is one of four ganged inductors. These ganged inductors are varied by the front panel RF CHANNEL TUNE control. Fixed inductor L107 and trimmer capacitor C163 are used to adjust for proper tracking of the gauged tuned circuit. The adjustment of trimmer capacitor C163 compensates for the differences in the stray capacitances and inductances that exist in the tuned circuits. The tuned circuit is shunted by resistor R163 to decrease the Q of the circuit, which increases the bandwidth.

c. Resistor R160 is the grid-return resistor, which places the grid at 0 dc volt with respect to ground. Resistor R161 is the cathode-biasing resistor and is bypassed by capacitor C154. Resistor R164 and capacitor C160 form a decoupling network for the plate voltage supply. Resistor 162 is the screen-dropping resistor and is bypassed by capacitors C158 and C159. Capacitors C155, C156, and C157 bypass the heater to ground (fig. 268).

219. Second Buffer Amplifier
(fig. 143)

a. Because the circuitry of the two buffer stages are similar, only the differences will be discussed.

b. The output of the first buffer stage is coupled through capacitor C162 to the grid of the second buffer stage, V109. Rf choke coil L108, shunted by resistor R167, is in series with the grid to suppress parasitic oscillations. A dc voltmeter connected across pin jacks J109 and J110 will measure a voltage drop that is proportional to the grid current flowing in this stage. This measured voltage is an indication of the rf excitation delivered by the preceding stage. Capacitor C164 is an rf bypass for this metering circuit.

c. One rf output of the second buffer amplifier supplies rf drive for the driver stage. Another rf output is supplied to the afc mixer. These outputs are at the base rf oscillator frequency.

220. Driver
(fig. 144)

The driver uses a class C amplifier as a frequency doubler for operation in the B- or C-band. Tube V110 and some of the circuit elements of the driver are contained in a shielded compartment.

a. The rf output of the second buffer amplifier is coupled through capacitor C173 (fig. 10.125 mc below the base rf oscillator fre- 143), is developed across grid-leak resistor R173, (fig. 144) and is applied to the grid of the driver, tube V110. The amplified voltage that appears at the plate of the drive is developed across the tuned circuit which consists of variable inductor L110 and the output capacitance of the tube. The range of the tuning inductor permits tuning the driver from 50 to 225 mc. Inductor L110 is varied by the DRIVER TUNE control. The output voltage is applied to the rf tuner through variable coupling capacitor C184 which is varied by the DRIVER OUTPUT COUPLING control to obtain an impedance match between the high impedance at the plate of the tube and the 50-ohm coaxial output circuit.

b. The average grid current that flows through resistors R173 and R172, together with the cathode bias, develops sufficient bias voltage for the tube to operate class C. A portion of this voltage, developed across resistor R172 and filtered by capacitor C172, is applied to the TEST meter circuit. This voltage is measured in the DRIVER GRID position of the TEST switch and is an indication of the rf drive applied to the driver. To increase TEST meter indication, R172 has been changed from 51.1 ohms to 100 ohms on some sets on Order No. 16811–Phila-51; also, for all sets bearing serial numbers 1 through 1847 on Order No. 32146–Phila–51.

c. Cathode bias is developed across resistor R175, which is bypassed for rf by capacitors C175, C177, C179, and C180. A voltage divider that consists of resistors R177 and R176 is connected across resistor R175 to provide a portion of the cathode-biasing voltage to the

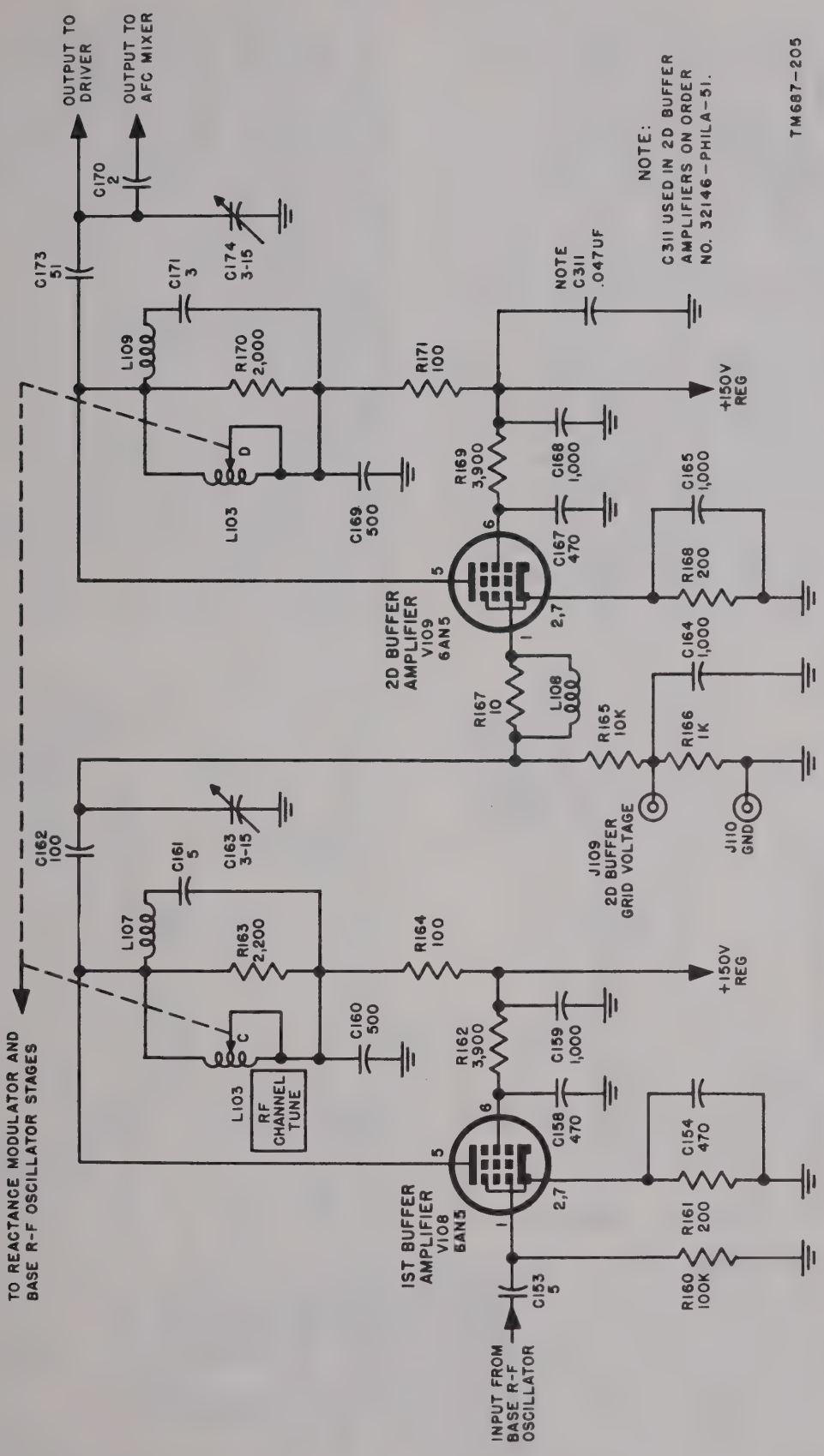

Figure 148. Buffer amplifiers

TEST meter circuit. This voltage is measured in the DRIVER CATH position of the TEST switch and is an indication of normal operation of tube V110.

d. Dc plate voltage is supplied from the +750-volt output of the power supply through the RC decoupling filter which consists of resistor R178 and capacitors C182 and C183. The plate supply voltage normally is adjusted to +750 volts for operation in the C band and to +850 volts for operation in the B band. Screen-grid voltage is supplied from the +150-volt regulated output of the power supply through resistor R188. The screen grid is held at rf ground potential by capacitors C181 and C176. When the C-band rf tuner is in place in the transmitter, switch S103 is closed and resistor R189 is connected between the screen grid and ground. As a result, the screen-grid voltage is decreased so that, with the lower plate voltage used in the C band, the screen grid will not draw excessive current.

221. Transmitter B-Band Tuner

a. General. Radio Frequency Amplifier AM–912/TRC is the transmitter B-band rf tuner, and it is used as a power amplifier in the B-band of 100 to 225 megacycles. Figure 145 is mechanical diagram showing the cutaway view of the B-band tuner; a complete schematic diagram is shown in figure 269; and an equivalent electrical diagram is shown in figure 146.

b. Mechanical Description. A cutaway view that shows the mechanical construction of the B-band tuner is given in figure 145. As may be seen in this diagram, two cylindrical resonant cavities are used. Cavity Z1 is used in the grid circuit of the tuner, and cavity Z2 is used in the plate circuit. Cavity Z1 is formed by outer cylinder A and inner cylinder B. One end of the cavity (the end closer to tube VI) is open. The other end of the cavity is closed by end plate C, to which is attached gearing arrangement D, driven by hand wheel E. In order

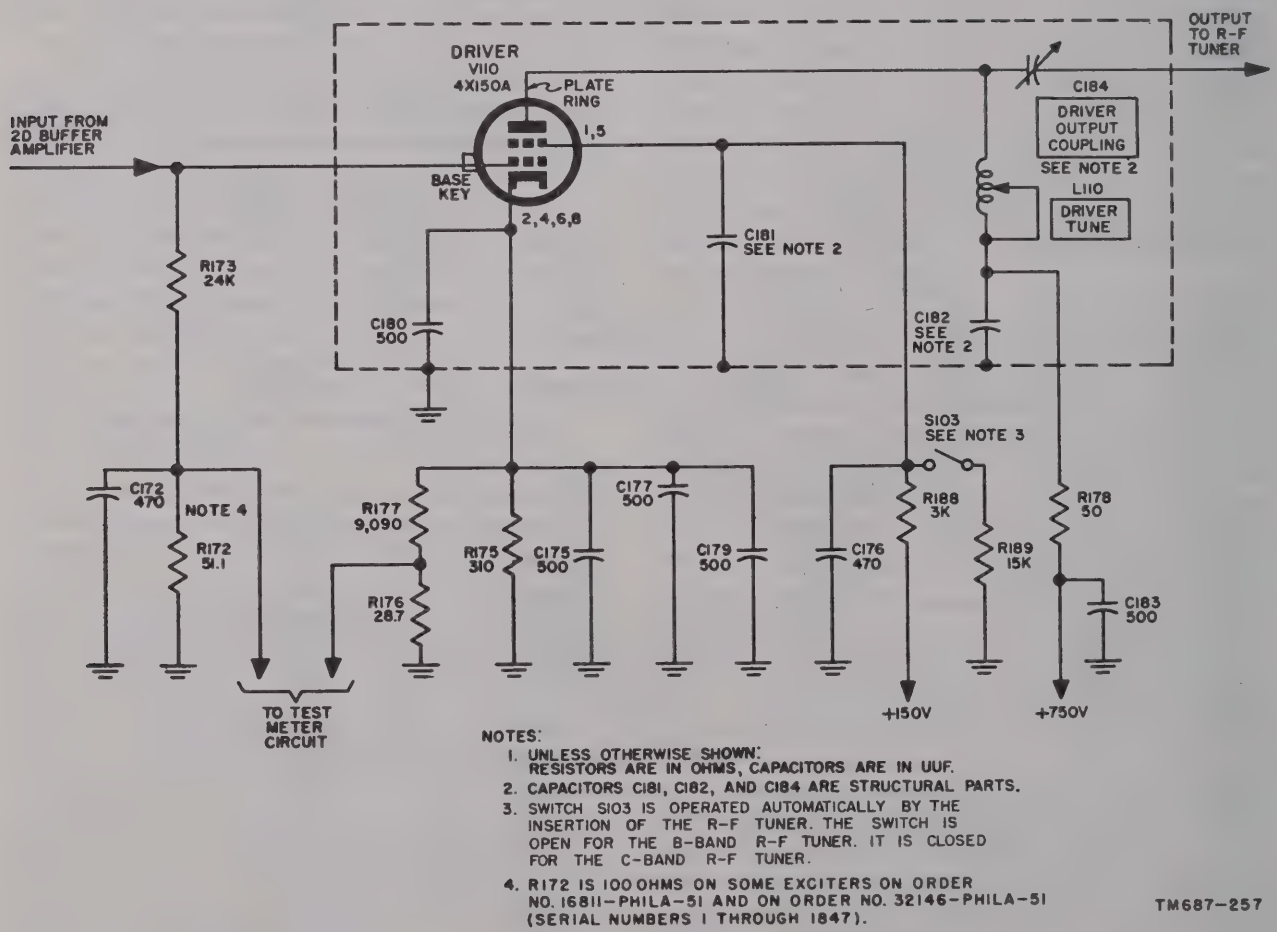

Figure 144. Driver.

that the effective length of the cavity may be varied, shorting plunger F is moved back and forth within the cavity. The prongs on plunger F make contact with both outer cylinder A and inner cylinder B, producing a short circuit at the point at which the plunger is adjusted, and effectively closes the cavity which exists between plunger F and the open end. Plunger F contains two threaded holes in which rods G and H rotate. These rods are turned by gearing arrangement D. When the hand wheel E, GRID tuning knob, is turned, plunger F moves within the cavity and changes the effective cavity length. Cavity Z2 is constructed mechanically in a similar manner. In addition, cavity Z1 contains a loop J that is attached to plunger F. This loop provides the input to the tuner and is connected to the rf input plug. Rod K is slotted, and passes through a hole in plunger F. As the plunger is moved back and forth, it causes rod K to rotate. Rod K is mechanically coupled to capacitor C12, so that the capacitance is varied at the same time as the length of cavity Z1 is varied. In the same manner, capacitor C16 (not shown in fig. 145) is varied as the length of cavity Z2 is changed.

c. Electrical Description (fig. 146).

(1) The output of the driver is inductively coupled to the tuned grid circuit of the B-band tuner by loop J (fig. 145), which is represented by inductor L1 (fig. 146). The tuned grid circuit consists of the inductance of cavity Z1 and variable capacitor C12. The tuned-circuit voltage is applied through coupling capacitor C9 and the parallel combination of resistor R8 and capacitor C8 to the grid of tube V1. When the rf input causes the grid to become more positive than the cathode, grid current will flow, charging capacitors C8 and C9. When the instantaneous rf voltage decreases, capacitor C8 discharges slightly through resistor R8 and capacitor C9 discharges slightly through a length of wire, which is represented by inductor L2 and resistor R9. The combined voltage drops across resistors R8 and R9 produce sufficient grid-leak bias to result in Class C operation. Capacitor C10 is an rf bypass capacitor for R9. Inductor L2 represents the inductance of the wire between capacitors C9 and C10. This inductance serves as an rf choke and reduces the shunting effect of capacitor C10 and resistor R9. The voltage developed across resistor R9 is applied to the TEST meter when the TEST switch is in the PWR AMPL GRID position (par. 245).

(2) The amplified voltage that appears at the plate of tube V1 is coupled through capacitor C15 and is developed across the tuned circuit consisting of the inductance of cavity Z2 and variable capacitor V16. The tuned-circuit voltage is coupled to the output connector through AMPLIFIER OUTPUT COUPLING capacitor C18. The dc plate current flows through a length of wire represented by rf choke L3 and through the parallel combination of resistors R10 and R11. Capacitors C17 decouples the +750-volt supply. The +750-volt output of the power supply is adjusted to +850 volts for operation in the B-band.

(3) Cathode current flows through cathode-biasing resistor R6, which is bypassed by capacitors C2, C4, C7, C13, and C14. A voltage divider that consists of resistors R5 and R7 is connected across the cathode-biasing resistor. The voltage across resistor R7 is applied to the TEST meter when the TEST switch is in the PWR AMPL CATH position (par. 245).

(4) The screen grid of tube V1 is bypassed for rf by capacitors C1, C6, and C11. The screen grid is connected to the regulated high-voltage output of the power supply (par. 251*c*).

222. Transmitter C-Band Tuner

a. General. Radio Frequency Amplifier-Multiplier AM–915/TRC is the transmitter C-band tuner that operates over a range of output frequencies from 225 to 400 mc. This tuner consists of a multiplier (frequency doubler) and a power-amplifier stage. A mechanical diagram showing a cutaway view of the multiplier is shown in figure 147; the complete schematic diagram of the tuner is shown in

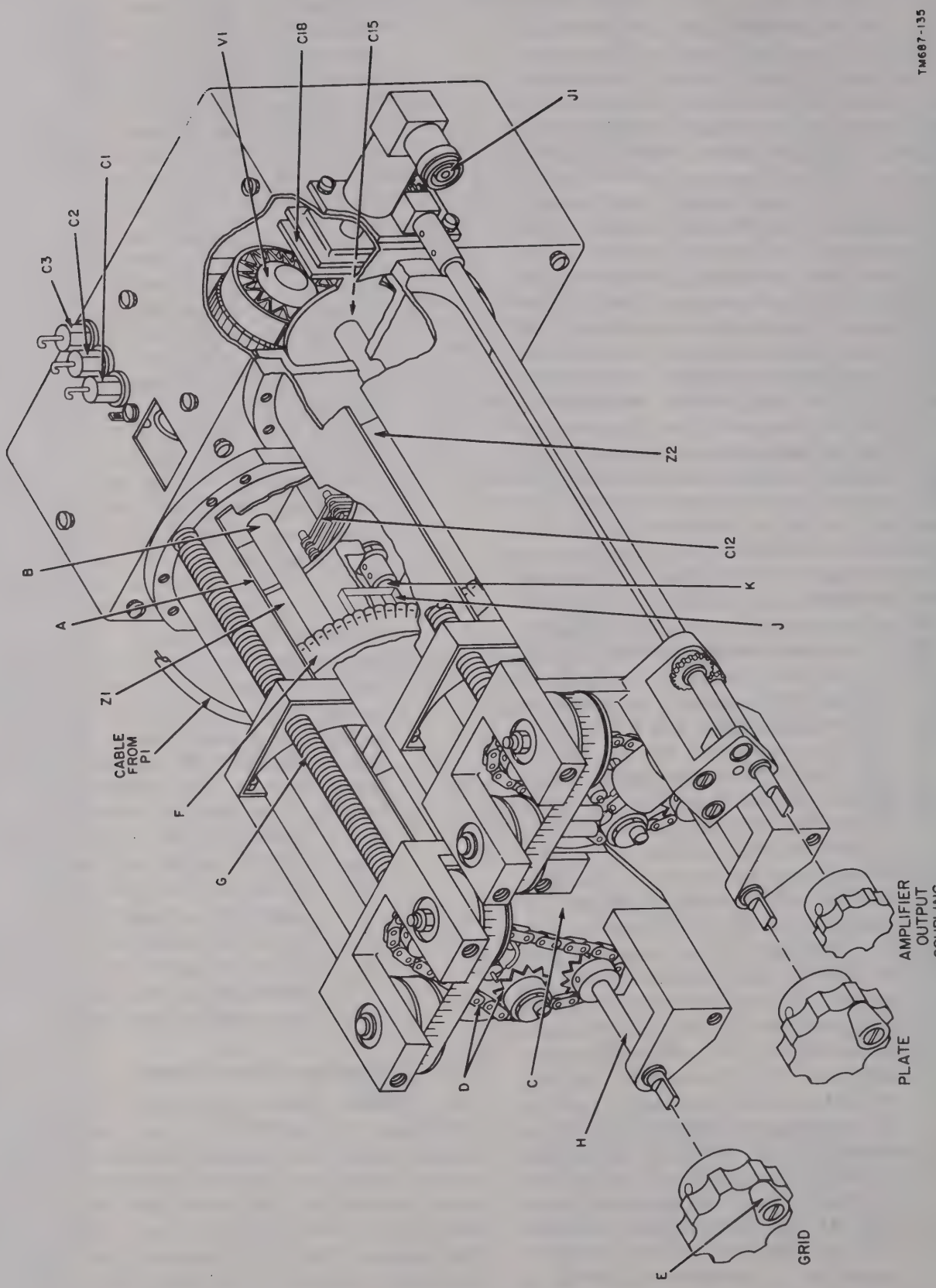

Figure 145. Transmitter B-band rf tuner, cutaway view.

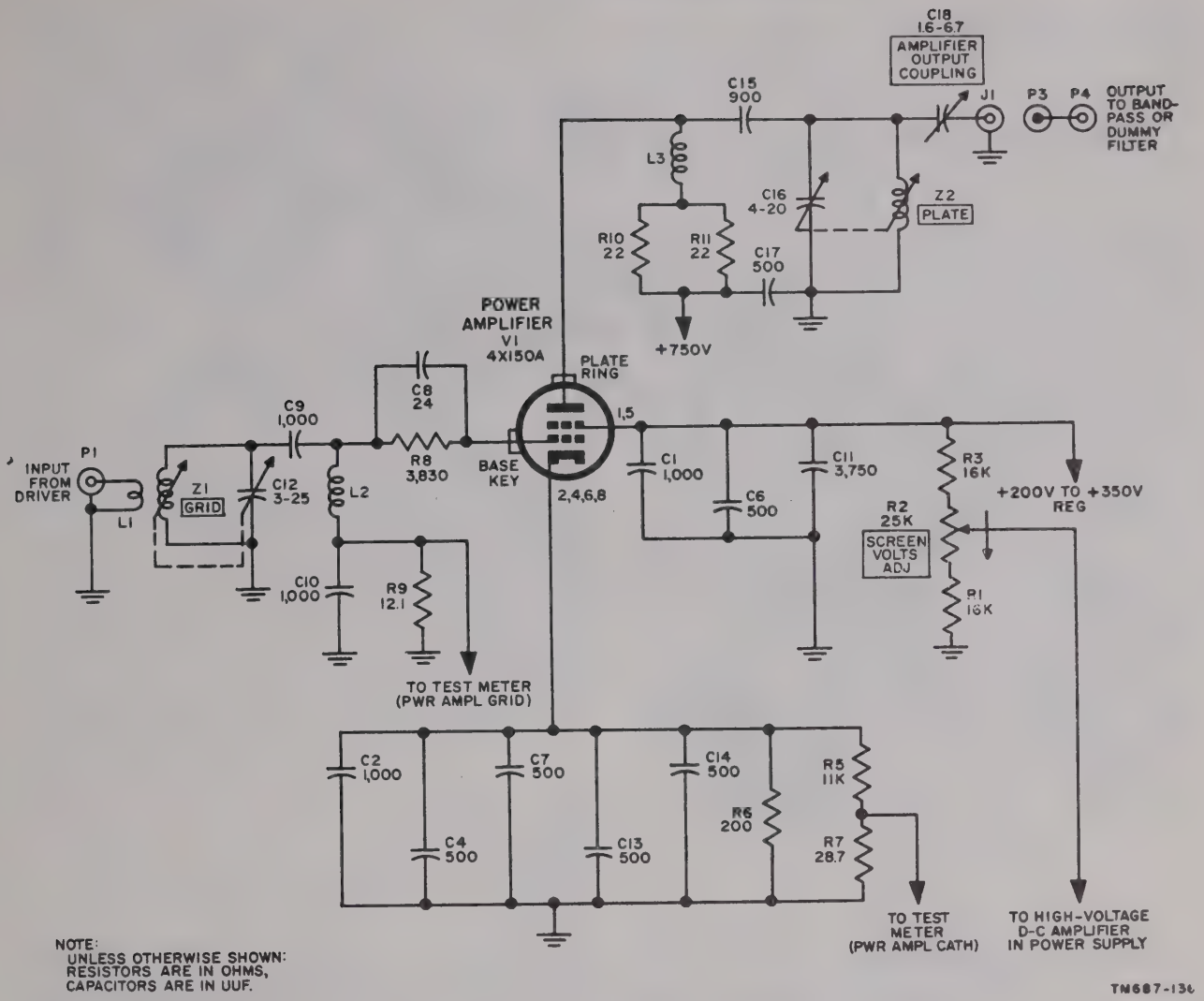

Figure 146. Transmitter B-band tuner, equivalent electrical diagram.

figure 270; and equivalent electrical diagrams of the multiplier and of the power amplifier are shown, respectively, in figures 148 and 149.

b. Mechanical Description. As may be seen in the exploded view (fig. 226), two sets of two concentric cylindrical cavities are included in the C-band tuner. One set is in the multiplier stage; the other in the power amplifier. Each set consists of three cylinders (fig. 147): an inner cylinder A, a middle cylinder B, and an outer cylinder C. Cavity Z1, used in the multiplier plate circuit, is formed by cylinders B and C. Cavity Z2, used in the multiplier grid circuit, is formed by cylinders A and B. Cavities Z3 and Z4 in the power amplified are formed in the same manner, and therefore, the construction of only cavities Z1 and Z2 is described. The ends of cavities Z1 and Z2 that are near tube V1 are open. The other ends of the cavities are closed by shorting plungers D and E, which can be moved back and forth. Prongs on plunger D make contact with cylinders A and B. Prongs on plunger E make contact with cylinders B and C. Plunger D is moved by the rotation of threaded rod F which, in turn, is controlled by the front panel GRID knob. Plunger E is moved by the rotation of threaded rods G and H, which are geared to the front panel PLATE knob. Rod F, which is geared to the GRID knob, controls capacitor C11. Loop K is attached to plunger D and couples the input signal into cavity Z2.

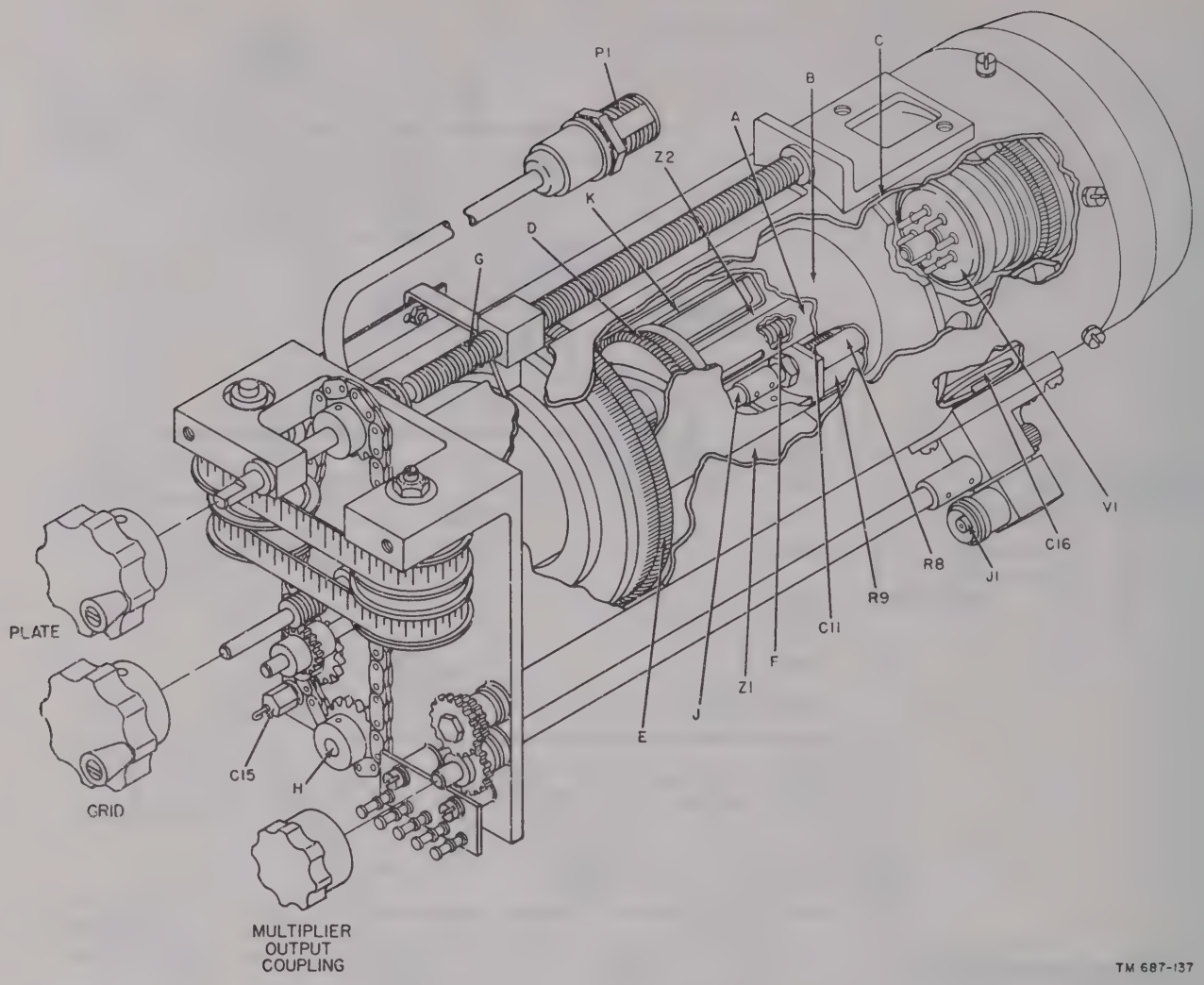

Figure 147. Transmitter C-band tuner multiplier, cutaway view.

223. Transmitter C-Band Tuner Multiplier (fig. 148)

a. The output of the driver is inductively coupled to cavity Z2 by loop K (fig. 147), which is represented by inductor L1 (fig. 148). Cavity Z2 is of such a length as to present inductive reactance at the input frequency. The cavity is tuned to resonance by variable capacitor C11 and the input capacitance of tube V1 Resistors R8 and R9 are connected across the tuned circuit to widen the bandwidth of the circuit sufficiently to pass the fm signal. One side of the tuned circuit is held at cathode rf potential by capacitors C5 and C6. The other side of the tuned circuit is connected through capacitor C9 to the control grid. When the grid is driven positive, grid current flows and charges capacitor C9. When the rf grid voltage decreases, capacitor C9 discharges slightly through a length of wire, which is represented as inductor L2, and through resistors R7 and R10, which are bypassed by capacitors C10 and C15. Inductors L2 serves as an rf choke which prevents capacitor C10 from placing the grid at rf ground potential. The voltage across resistor R10 is proportional to the grid drive and is applied to the TEST meter when the TEST switch is in the MULT GRID position.

b. Rf plate current flows through blocking capacitor C8 to cavity Z1. This cavity is of such length as to act as a parallel-tuned circuit that is resonant at twice the input frequency. Therefore, the multiplier operates as a frequency doubler. The plate side of cavity Z1 is grounded for rf and the other side is connected through capacitors C13 and C14 to the cathode and through capacitor C16 and connectors J1 and P3 to the power amplifier of

the tuner. Capacitors C13 and C14 isolate the dc cathode circuit from cavity Z1. MULTIPLIER OUTPUT COUPLING capacitor C16 provides impedance matching and couples the output of Z1 to the 50-ohm coaxial cable. The dc plate circuit is isolated from the ac circuit by a length of wire which is represented as L5. Resistor R11 provides additional isolation between the ac and dc plate circuits.

c. The screen grid is held at the cathode rf potential by capacitors C4 and C12. The dc screen-grid circuit is isolated from the ac circuit by a length of wire, which presents the inductance represented by rf choke L4. Capacitor C1 and the parallel combination of R4 and R5 provide decoupling for the regulated high-voltage output of the power supply (par. 251*c*).

d. Cathode bias is developed across resistor R19 and is bypassed by capacitor C2. The inductance, L3, of a length of wire isolates the dc cathode circuit from the ac circuits, which are connected to the cathode. The voltage divider, which consists of resistors R18 and R20, is connected across the cathode-biasing resistor. The voltage across R20 is proportional to the total dc tube current and is applied to the TEST meter when the TEST switch is in the MULT CATH position.

224. Transmitter C-Band Tuner Power Amplifier
(fig. 149)

a. Rf Circuits. The output of the multiplier is coupled from connector P3 through capacitor C26 to cavity Z4. The input connection to the cavity is made at a point within the cavity to provide an impedance match between the coaxial cable and the cavity. One side of the cavity is at the rf reference voltage and is connected through coupling capacitors C19 and C25 to the control grid and through capacitors C17 and C22 to the screen grid. Thus, the control and screen grids are held at the rf reference voltage and the circuit functions as a grounded-grid amplifier. The other side of the cavity is connected to the cathode that causes the cathode voltage to vary at an rf rate with respect to the grid. The rf plate current is coupled to cavity Z3 through capacitor C23. Cavity Z3 is tuned to the same frequency

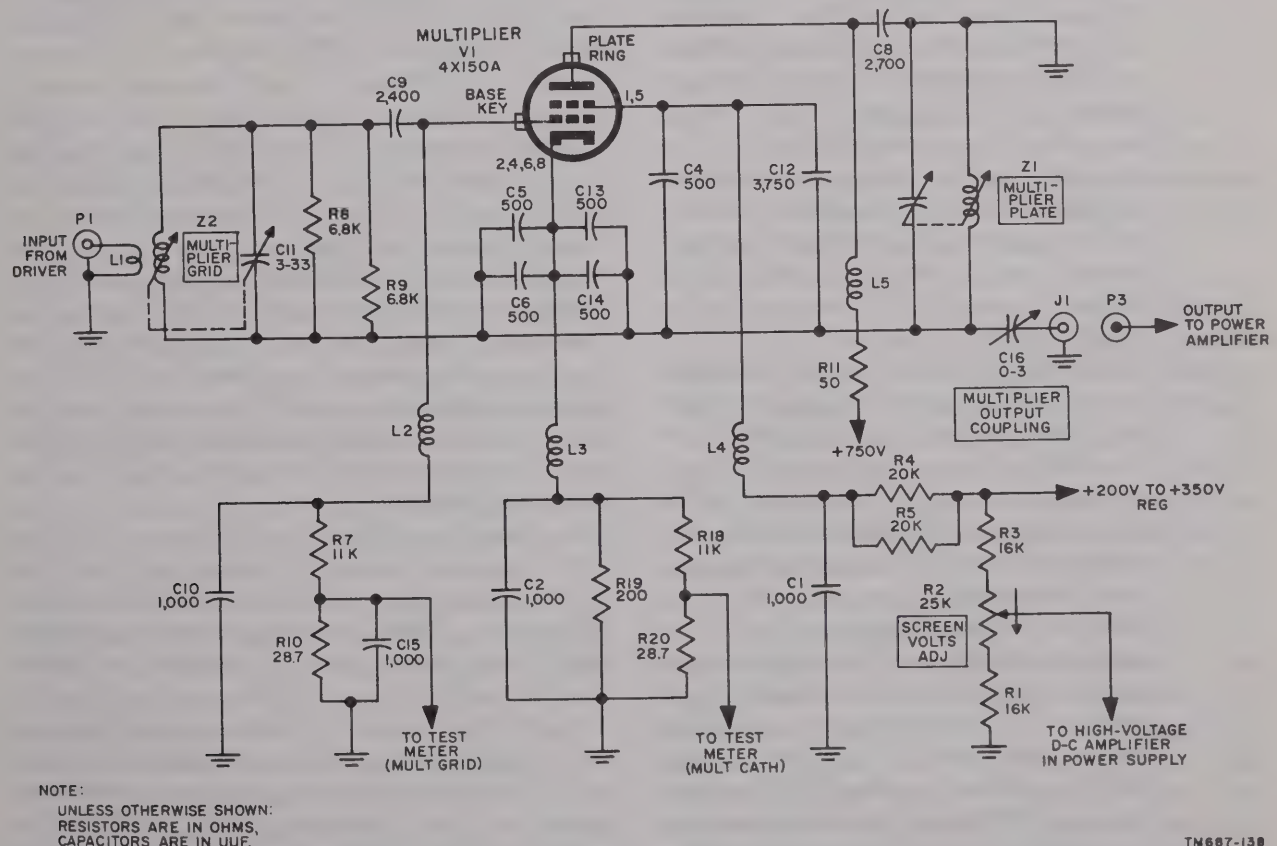

Figure 148. Transmitter C-band tuner multiplier, equivalent electrical diagram.

as the cathode circuit by the POWER AMPLIFIER PLATE control. The control adjusts the position of the shorting plunger and hence the physical length of the cavity. The cavity is tuned when its length corresponds to a quarter wavelength at the operating frequency. The plate side of cavity Z3 is grounded and the other side, which is the cylinder that is common to both Z3 and Z4, is at the rf reference voltage. The reference voltage with respect to ground is the voltage across cavity Z3 and is connected to the output through AMPLIFIER OUTPUT COUPLING capacitor C28 and connectors J3, P4, and P5.

b. Dc Circuits.

(1) The dc cathode circuit is connected to the innermost cylinder (fig. 270) beyond the shorting plunger. The rf energy is contained on the other side of the shorting plunger and is thus isolated from the dc circuit. This isolation is represented on the electrical equivalent diagram (fig. 149) by rf choke L1. Cathode bias is developed across resistor R15, which is bypassed by capacitor C29. Capacitor C27 prevents the dc cathode voltage from being shorted to ground through cavity Z3. A voltage divider, which consists of resistors R16 and R17 is connected across the cathode-biasing resistor. The voltage across resistor R17 is proportional to the total tube current and is applied to the TEST meter when the TEST switch is in the PWR AMPL CATH position.

(2) When the cathode becomes more negative than the control grid, grid current flows and charges capacitors C19 and C25. When the cathode voltage increases during the remainder of the rf cycle, these capacitors discharge through a length of wire, represented by rf choke L2 and resistors R13 and R14, which are bypassed for rf by capacitors C20 and C21. The voltage across resistor R14 is roughly proportional to the amount of drive to the cathode and is applied to the TEST meter when the TEST switch is in the PWR AMPL GRID position.

(3) The dc screen-grid circuit is isolated from the rf circuit by the inductance, L3, of a length of shielded wire. Capacitor C18 provides additional decoupling for the regulated high-voltage output of the power supply.

(4) Inductor L4, which is a length of shielded wire, isolates the dc from the rf plate circuit. Resistor R12 provides additional decoupling for the +750-volt output of the power supply.

225. Band-Pass Filter

a. General. A brief description of the band-pass filters is contained in paragraph 195. In the B-band, each filter can be tuned over a range of 21 mc. In the C-band, each tuner covers 30 mc. Each filter inserts a loss of approximately 1 db at the operating frequency. A loss of about 45 db occurs at all frequencies more than 21 mc away from the operating frequency in the B-band, and 30 mc away in the C-band when the filter is used.

b. Mechanical Description. A cross section of band-pass filter is shown in A, figure 150. This cross section has been simplified so that it applies equally to any of the band-pass filters. Each of the two cavities of a band-pass filter is identical. The input cavity consists of an outer cylinder, E, with two end plates F and G. Located on end plate F is an input coaxial connector P1, to which a coupling loop, A, is connected. Rod B, which lies along the axis of outer cylinder E, supports the fixed inner cylinder C. Rotation of knob I, which is coupled to the shaft through a gearing arrangement, causes the inner cylinder D to move along the axis within cylinder C. In figure 150, the gearing arrangement has been simplified and is represented by screw H. A second coupling loop, J, is connected to coupling loop K, which is in the output cavity and corresponds to input coupling loop A.

c. Equivalent Electrical Diagram (B, fig. 150). At the vhf or uhf range for which the band-pass filter is used, rods B and L present inductance. These inductances are represented on the equivalent electrical diagram as inductors L2 and L5 (B, fig. 150), respectively, and are also represented by dotted lines in figure 271. The fixed capacitance of each cavity consists of the distributed capacitance between the center rod and the outer cylinder and the capacitance between the fixed inner cylinder, C or M, and the outer cylinders C1 and C4 (fig.

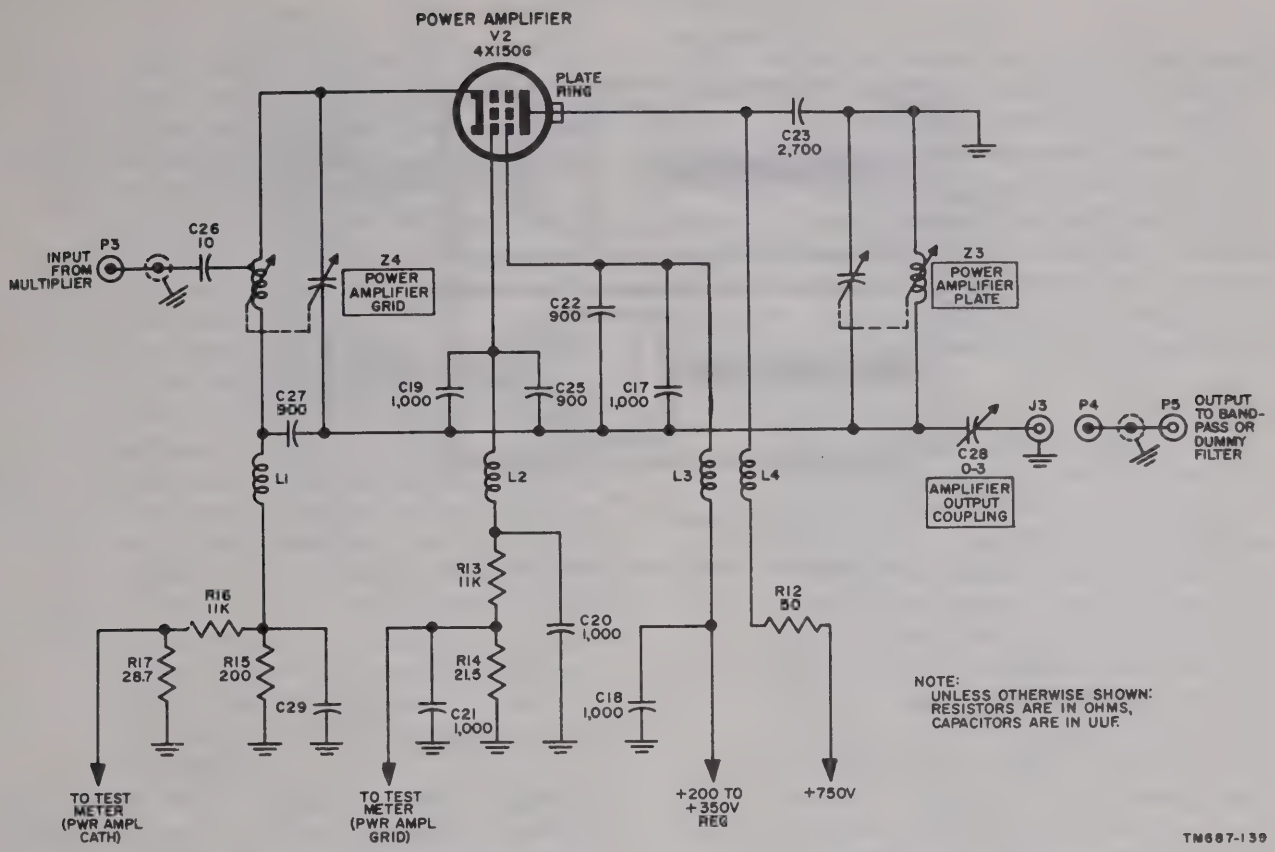

Figure 149. Transmitter C-band tuner power amplifier, equivalent electrical diagram.

271). The sum of these distributed capacitances is represented by capacitor C1 for the input cavity and by capacitor C4 for the output cavity (B, fig. 150). The fixed inner cylinders are represented as the connection dots appearing above capacitors C1 and C4. In the input cavity, capacitance exists between the adjustable inner cylinder D and inner cylinder C. This capacitance appears on the equivalent diagram as capacitor C2. The adjustable inner cylinders and the outer cylinders of both cavities are at ground potential and are represented by the common ground line. In the output cavity, capacitor C3 corresponds to capacitor C2. Coupling loops A, J, K, and R are shown as inductors L1, L3, L4, and L6, respectively.

d. Theory of Operation. Because the theory of operation of the input and output cavities is identical, only the input cavity will be discussed.

(1) Clockwise rotation of front-panel control I causes the adjustable cylinder to move into the fixed inner cylinder. Thus, capacitor C2 increases and the total capacitance of the input cavity increases. As a result, the frequency to which the circuit is tuned decreases and this frequency is indicated on the dial connected to knob I.

(2) The input signal is applied to connector P1 and is inductively coupled into the input cavity through coupling loop L1. The physical positioning of loop L1 produces a good impedance match between the coaxial cable that is connected to connector P1 and the cavity. The signal from the input cavity is coupled to the output cavity by loops L3 and L4. Typical selectivity curves for the band-pass filters are shown in figure 53.

e. Differences in Band-Pass Filters. Each of the band-pass filters covers a different portion of the frequency range. The spacing between end plate F and the front panel is necessarily the same for all the filters because each must be fitted into the same space in the transmitter or receiver. The spacing between end

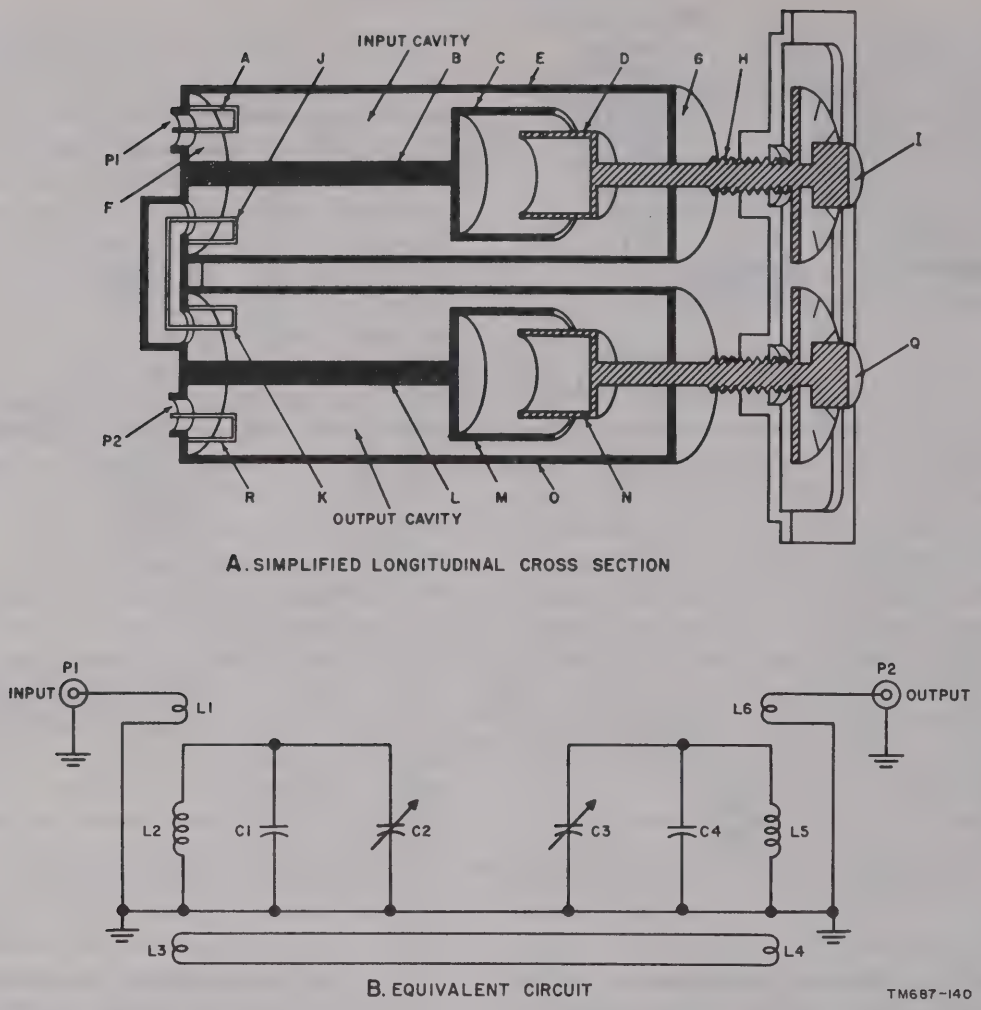

Figure 150. Band-pass filter, mechanical and electrical diagram.

plates F and G is smaller in the higher-frequency filters, and also the inductance of rod B is smaller. The result is higher resonant frequencies.

226. Directional Coupler

A brief description of the directional coupler is contained in paragraph 196.

a. Mechanical Description (fig. 151).

(1) The directional coupler consists of three sections: the transmission section, the forward-power section, and the reflected-power section. The transmission section has a rectangular cross section and contains a short length of slotted coaxial transmission line that delivers the output from either the band-pass filter or dummy filter to ANTENNA jack J121. Above the slots in the transmission line, the transmission section has two cylindrical indentations into which the forward-power section and reflected power section fit. Figure 151 shows the reflected-power section seated in the transmission section. The forward-power section is shown exploded to show the internal construction.

(2) The forward-power section consists of a sleeve that contains the circuit elements. Crystal CR102 fits into the sleeve and makes contact with the hollow prong in the center of the sleeve. One end of the hollow prong is connected to a metallic plate that is separated by a dielectric from the sleeve. One end of resistor R192 is connected to the sleeve and the other end is connected through a short length of wire, L1, to the metallic

plate. When the forward-power section is seated in the appropriate cylindrical indentation of the transmission section, the wire, L1, can be made parallel to the center conductor by rotating the sleeve until the positioning mark on the sleeve lines up with the positioning mark on the transmission section.

(3) The construction of the reflected-power section and the forward-power section is identical. The only difference between these two sections is in their positioning. The positioning mark on the forward-power section points toward jack J121 and the positioning mark on the reflected-power section points toward jack J118. Thus, a difference occurs in the relative position of the resistance and inductance (short length of wire) within the forward-power and reflected-power sections.

b. Electrical Description. The forward-power section provides a negative dc voltage that is roughly proportional to the power transmitted at the antenna. This voltage is applied to the low-power alarm circuit, which provides alarm indications when the voltage decreases to too low a value (par. 244). This voltage is applied also to the TEST meter circuit to provide an indication of the forward power. The reflected-power section provides a negative dc voltage, which is roughly proportional to the power reflected from the transmitting antenna, and is transmitted back through the directional coupler. This voltage is applied only to the TEST meter circuit to provide an indication of the reflected power.

(1) *Equivalent electrical diagram* (fig. 152). The capacitance existing between the central prong of the forward-power section and the center conductor of the slotted transmission line is represented by C1, and the capacitance between the plate and the sleeve is represented by C2. The short length of wire between resistor R192 and the metallic plate is represented by L1; the plate is represented as a connection point and the sleeve is ground. In the reflected-power section, capacitors C3 and C4 correspond to capacitors C1 and C2, respectively, of the forward-power section, and inductor L2 corresponds to inductor L1.

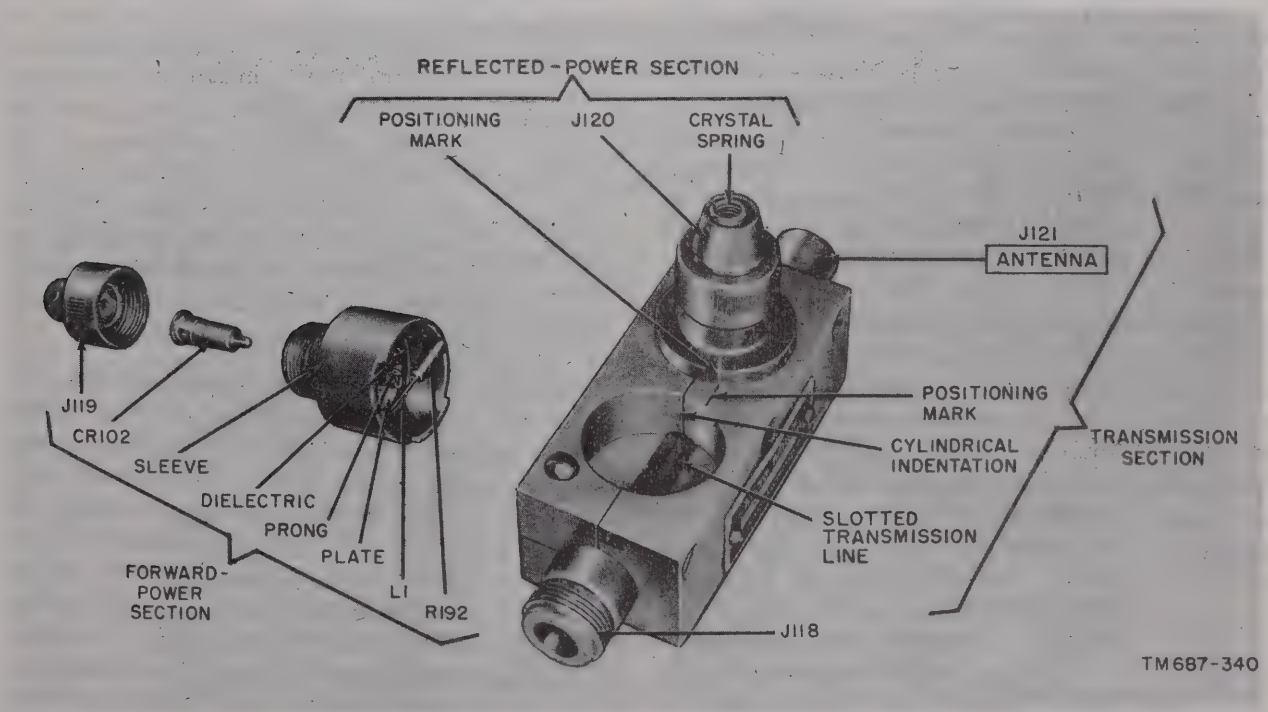

Figure 151. Directional coupler, partially exploded view.

Rectifiers CR102 and CR103 are in the forward-power and reverse-power sections, respectively.

Note. Rectifier symbols in the complete and simplified schematic diagrams in this manual are arranged so that the arrowhead portion of the symbol points opposite to the direction of low resistance to electron flow.

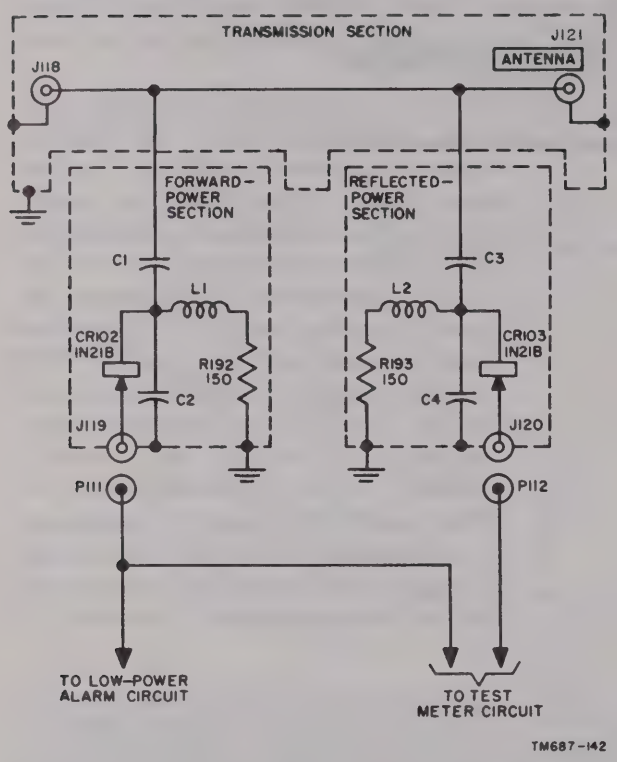

Figure 152. Directional coupler, equivalent electrical diagram.

(2) *Theory of Operation.*

(*a*) Various electrical conditions can exist at different times on the transmission line. The directional coupler, in conjunction with the TEST meter circuit, indicates the electrical condition of the line. Ideally, the antenna is perfectly matched to the transmission line and the voltage and current at any point in the transmission line are in phase. All the power transmitted down the line is radiated, none is reflected, and standing waves do not exist on the line. If the transmission line is completely open or shorted, the current in the line will be 90° out of phase with the voltage on the line at every point. All the power transmitted down the line is reflected, none is radiated by the antenna, and standing waves exist on the transmission line. Normally, some reflected power exists because of imperfect termination of the line at the antenna and the current and voltage are slightly out of phase.

(b) In the forward-power section, the voltage, E, on the line causes current to flow through capacitor C1 and crystal rectifier CR102 to the load. The load consists of the low-power alarm circuit, and also the TEST meter when the TEST switch is in the FWD PWR position. The load current, because of high-impedance capacitor C1, leads the voltage on the line by 90°. The current on the line induces a voltage in inductor L1, which leads the current on the line by 90°. This induced voltage causes current I_L to flow through resistor R192, crystal rectifier CR102, and the load. This current is in phase with the induced voltage because of the relatively high series resistance of resistor R192 and the load. In the forward-power section, inductor L1 is positioned so that the current flow caused by inductive coupling leads the current in the line by 90°. The algebraic sum of the capacitively coupled current and the inductively coupled current is rectified and the resultant pulsating direct current is filtered by capacitor C186 and resistor R194 (fig. 268) and applied to the load.

(*c*) In the reflected-power section, the capacitively coupled current is the same as in the forward-power section. The inductively coupled current, because of the positioning of L2, is 180° out of phase with the inductively coupled current in the forward-power section and lags the current in the line by 90°. The algebraic sum of the two components of current is rectified by crystal rectifier CR103 and filtered by capacitor

C187 and resistor R195 (fig. 268) and applied to the load.

(*d*) Figure 153 shows the currents induced in both the forward-power section and the reflected-power section for two conditions. Condition A is the idealized condition—that is, when the reflected power is so much less than the forward power that it can be neglected. Condition B represents complete mismatch of the transmission line resulting in nearly equal forward and reflected power.

(*e*) In condition A, the voltage E and current I on the line are in phase. The current I_C that is capacitively coupled into the forward-power section is equal and in phase with the current I_L that is inductively coupled into the forward-power section. The resultant current I_T is equal to I_C+I_L and is rectified by rectifier CR102. The negative dc voltage resulting from the rectification is proportional to I_T and appears between jack J119 and ground. The current I_C that is capacitively coupled into the reflected-power section is equal to, but 180° out of phase with, the current I_L that is inductively coupled into the reflected-power section. The resultant current I_{TR} is equal to I_C+I_L. Thus I_L cancels I_C and I_T is zero. Therefore, the voltage that appears between jack J120 and ground is equal to zero.

(*f*) In condition B, the voltage and current on the transmission line are 90° out of phase. In the forward-power section, the capacitively coupled component of current leads the voltage on the line by 90°. The inductively coupled component of current leads the current in the line by 90° and so is 90° out of phase with the capacitive component. In the reflected-power section, the inductively coupled component of current lags the current in the line by 90° and so is 90° out of phase with the capacitively coupled component. Therefore, the resultant current is equal in magnitude in the two sections.

(*g*) The voltage at jack J119 is measured on the TEST meter when the TEST switch is in the FWD PWR position. The voltage at jack J120 is measured when the TEST switch is in the REFL PWR position. Under normal conditions, the meter reading in the FWD PWR position will be much larger than the meter reading in the REFL PWR position. The reading of reflected power normally is less than 10 microamperes. The reading of forward power depends on the power output of the transmitter and usually is greater than 30 μa. However, when the antenna is not matched to the transmission line, as would happen if the antenna stubs were not properly adjusted, the reading of reflected power will increase and could approach one-half of the forward-power reading. If the transmission line becomes opened or shorted, the reflected-power reading will be approximately equal to the forward-power reading.

227. Transmitting Antenna

The transmitting antenna, like the receiving antenna, consists of a pair of dipoles mounted on a plane reflector. Conventional rod-type dipoles are used for the C-band, and V-type dipoles for the B-band. The length of the dipole is adjustable so that the total dipole length approximates a half-wavelength at the output radio frequency. The spacing between the dipoles and the plane reflector is adjustable so that this distance approximates a quarter-wavelength at the operating frequency. In addition, the spacing between the dipoles is adjustable so that this distance approximates a half-wavelength at the operating frequency. These three adjustments of spacing provide for the best possible directivity over the operating range of the radio set. Typical directivity patterns are shown in figure 154.

228. Crystal Oscillator
(fig. 155)

a. General. The crystal oscillator is de-

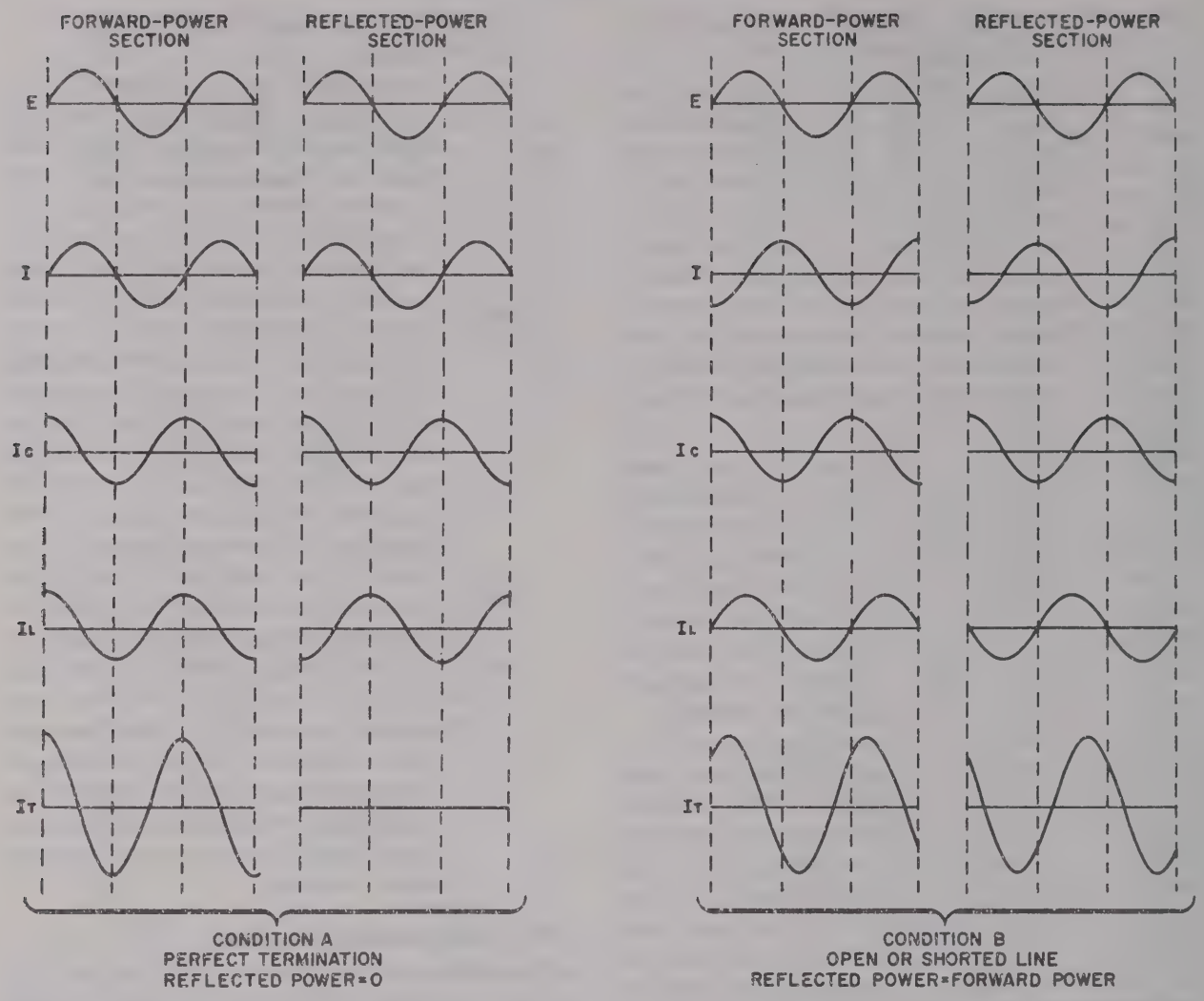

Figure 153. Directional coupler, idealized current and voltage waveforms.

scribed briefly in paragraph 199. The crystal-oscillator circuit contains twin triode tube V114. One triode section operates as a cathode follower and the other section as a grounded-grid amplifier. When B+ is applied to the plate of V114B, the crystal in the cathode circuit of this stage is shock-excited producing an ac voltage. The voltage at the plate of V114B is coupled to the grid of the cathode-follower section of tube V114A. The voltage at the cathode of the cathode-follower section is coupled through capacitor C104 and a crystal to the cathode of the grounded-grid amplifier. The crystal operates as a series-resonant circuit at the resonant frequency of the tuned plate circuit of the grounded-grid amplifier. Thus the crystal passes the desired frequency and rejects the other frequencies. This circuit, with two selective circuits, produces a very stable frequency.

b. Output, 2.5-mc. When the XTAL SEL switch is in the DECADE CHANS position (fig. 155), the crystal oscillator produces an output frequency of 2.5 mc. The tuned plate circuit of the grounded-grid tube V114B consists of fixed capacitor C198 and adjustable inductor L111. This circuit is resonant at 2.5 mc. The ac voltage across this tuned circuit is coupled through capacitor C192 and appears across grid resistor R197. During a portion of the positive half-cycle of the applied ac voltage, the grid of the cathode follower draws current, increasing the charge on capacitor C192. During the remainder of the cycle, the capacitor discharges through resistors R197 and R199. Capacitor C193 filters the voltage across resistor R199. This dc voltage can be measured at test jack J122. The voltage at the test jack is an indication of the operation of the crystal oscillator.

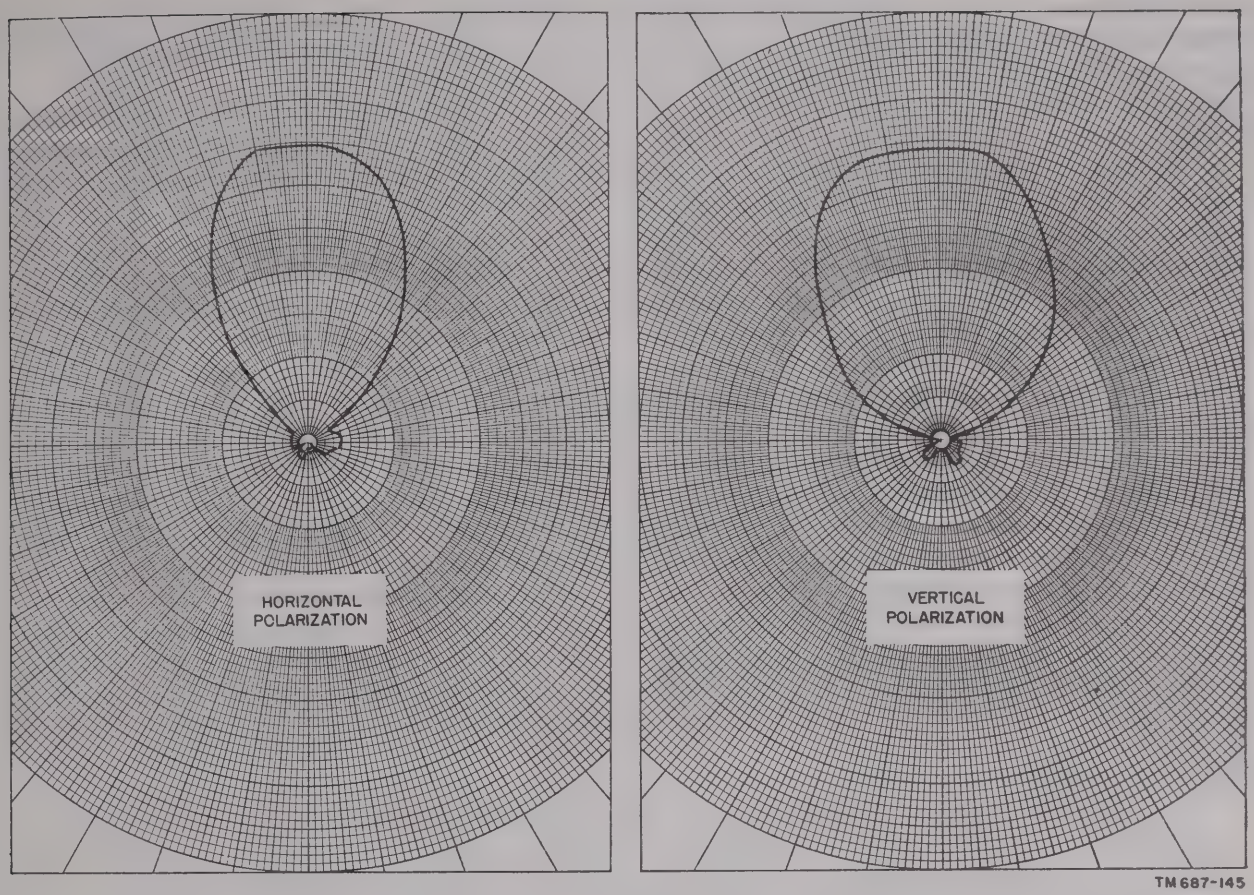

Figure 154. Typical antenna directivity patterns.

The plate of tube V114A is held at ac ground by capacitor C191, which is connected to the plate in the DECADE CHANS and DISCR CENTER positions of the XTAL SEL switch. The ac output of the cathode follower is developed across resistor R207. Resistor R207 shunts cathode-biasing resistor R198 to provide an impedance match for crystal Y101. Capacitor C194 prevents the application of dc to the crystal. Crystal Y101, at 2.5 mc, effectively is a series-resonant circuit and the 2.5-mc voltage across resistor R207 appears across resistor R204, which is the cathode resistor for tube V114B. The 2.5-mc voltage is amplified and developed across the tuned plate circuit. The 2.5-mc output of the crystal oscillator is applied through coupling capacitor C200 to the grid circuit of the 2.5-mc pulse generator (par. 230). Dc plate voltage for the grounded-grid amplifier is applied through an RC filter, which consists of resistors R222 and R221 and capacitors C215, C214, and C208. Dc plate voltage for tube V114A is applied through resistor R200 and part of the XTAL SEL switch.

c. Output, 10.125-mc. When the XTAL SEL switch is in the DISCR CENTER position, the crystal oscillator produces an output frequency of 10.125 mc. The circuit is similar to that for the DECADE CHANS position (*b* above). Section 2A of the XTAL SEL switch connects a different tuned circuit to the plate of the grounded-grid amplifier. When the XTAL SEL switch is in the DISCR CENTER position, the tuned plate circuit consists of fixed capacitors C209 and C210 and adjustable inductor L114. This circuit is resonant at 10.125 mc. A small portion of the tuned-circuit voltage appears across capacitor C210 and is developed across the voltage divider, which consists of resistors R220 and R223. Resistor R223 provides an impedance match with the 52-ohm coaxial cable, W109, which applies the 10.125-mc output to the output circuit of the afc mixer. Section 2C of the XTAL SEL switch connects crystal Y103 (10.125 mc) in place of crystal Y101 and re-

sistor R209 in place of resistor R207. The remainder of the circuit remains unchanged by operation of the XTAL SEL switch from the DECADE CHANS to the DISCR CENTER position.

d. Output, 1.0-mc. When the XTAL SEL switch is in the UNIT CHANS position, the crystal oscillator generates an output of 1.0 mc. Section 2A of the XTAL SEL switch connects fixed capacitor C204 and adjustable inductor L112 to the plate of tube V114B. This circuit is resonant at 1.0 mc. Crystal Y102 (1.0 mc.) is switched into the circuit and this crystal requires no impedance-matching resistor since its impedance is almost equal to that of the cathode circuit of tube V114A. Section 1A of the XTAL SEL switch disconnects capacitor C191 from the plate of tube V114A. Resistor R211 now functions as the plate load and the 1.0-mc. voltage developed across resistor R211 is applied through coupling capacitor C190 and dropping resistor R196 to the grid of the .5-mc pulse generator.

229. Pulse Generator, .5-mc (fig. 156)

a. Circuit Operation. Tube V113 is used as a synchronized single-swing blocking oscillator, which cuts itself off after 1 cycle because of the accumulation of a negative charge on the grid capacitors, C202 and C206. As the charge on the grid capacitors leaks off, the grid bias is reduced. The reduction of grid bias and the positive swing of the 1.0-mc synchronizing voltage cause tube V113 to begin to conduct. As plate current starts to flow, a magnetic field is established around winding 3–4 of transformer T104. This field builds from zero to a maximum in direct proportion to the plate current. While the plate current is increasing, winding 2–1 of the transformer applies an increasingly positive voltage to the grids of tube V113 and plate saturation is reached quickly. During the rise of plate current, grid current flows and recharges the grid capacitors. When saturation is reached, there is no induced voltage in winding 2–1 of the transformer and the grid voltage is negative because of the charged grid capacitors. Plate current decreases and the magnetic field in the transformer collapses, inducing a negative voltage in winding 1–2, which cuts off the tube. The tube remains cut off until the alternative positive swing of the synchronizing voltage and the discharge of the grid capacitors brings the tube out of cut off and the cycle is repeated.

b. Circuit Description. The two triode sections (B, fig. 156) of tube V113 are connected in parallel through parasitic-suppressor resistors R203 and R206. The 1.0-mc output of the crystal oscillator (par. 228) is applied to the grids of tube V113. The positive swing of alternate cycles of the 1.0-mc voltage accurately determines the start of the cycle and synchronizes the .5-mc pulse generator. The idealized waveforms for the .5-mc pulse generator are shown in A, figure 156. The tube conducts only on alternate positive cycles. This is represented by the portions of the waveform on the grid voltage curve above the broken line (cutoff). The slight rise in voltage at the center of the curve represents the interval of the nonconducting alternate cycle during which the synchronizing 1-mc oscillator voltage drives the grid in a positive direction but not above cutoff. The free-running frequency of the circuit is slightly lower than .5 mc and is determined by the time-constant circuit consisting of capacitors C202 and C206 and resistor R213. Capacitor C206 is factory adjusted and sealed to provide the correct free-running frequency. A portion of the negative voltage across the grid capacitors is developed across resistor R212, is filtered by capacitor C201, and is applied to test jack J125. The measurement of the voltage at this test jack is an indication of the amplitude of oscillations in the circuit. Resistors R208, R213, and R212 form a voltage divider that supplies the initial positive voltage to the grid, reduces the negative grid bias, and stabilizes circuit operation. Plate voltage is supplied through the two-section decoupling filter consisting of resistors R200 and R205 and capacitors C191 and C196 when the XTAL SEL switch is in the UNIT CHANS position. No plate voltage is supplied and the .5-mc pulse generator is inoperative when the XTAL SEL switch is in either the DECADE CHANS or the DISCR CENTER position. The output of the .5-mc pulse generator is developed in winding 6–5 of transformer T104. This output is applied to the grid of the cathode follower (par. 231) when the XTAL SEL switch is in the UNIT CHANS position. The resulting grid current produces grid bias for the cathode follower across resistor R210 and capacitor C197.

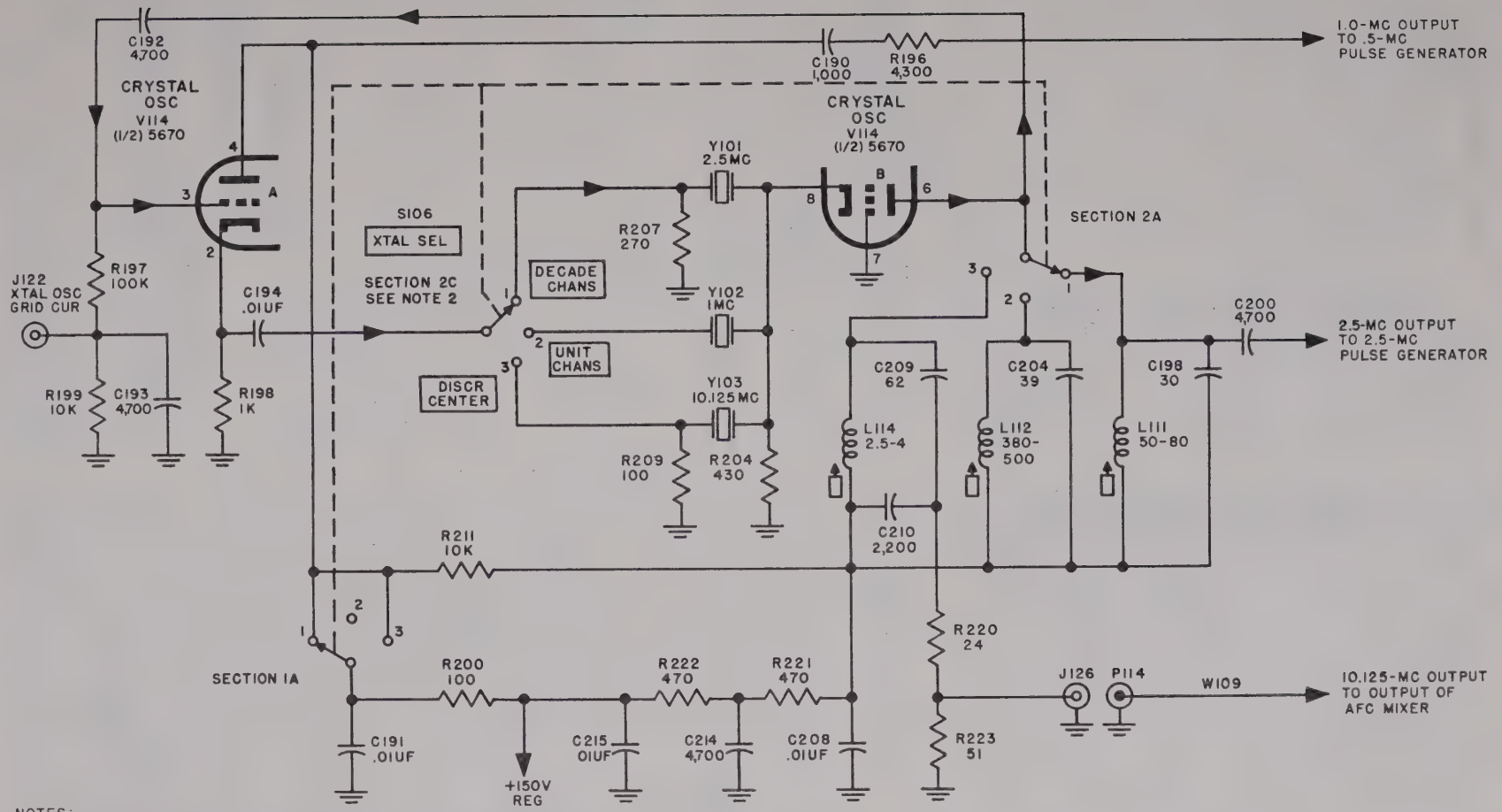

NOTES:

1 UNLESS OTHERWISE SHOWN: RESISTORS ARE IN OHMS, INDUCTORS ARE IN UH, CAPACITORS ARE IN UUF.

2 ONLY THOSE PARTS OF THE XTAL SEL SWITCH WHICH AFFECT THE CRYSTAL OSCILLATOR CIRCUIT ARE SHOWN IN THIS DIAGRAM.

3 LARGE ARROWHEADS INDICATE SIGNAL PATH WHEN XTAL SEL SWITCH IS IN DECADE CHANS POSITION.

TM687-146

Figure 155. Crystal oscillator.

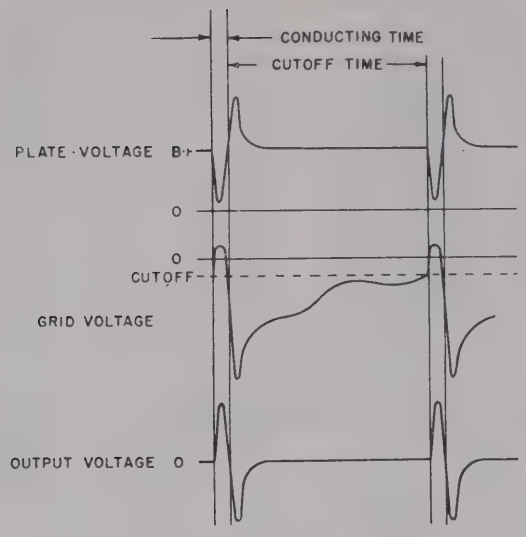

A IDEALIZED WAVE FORMS

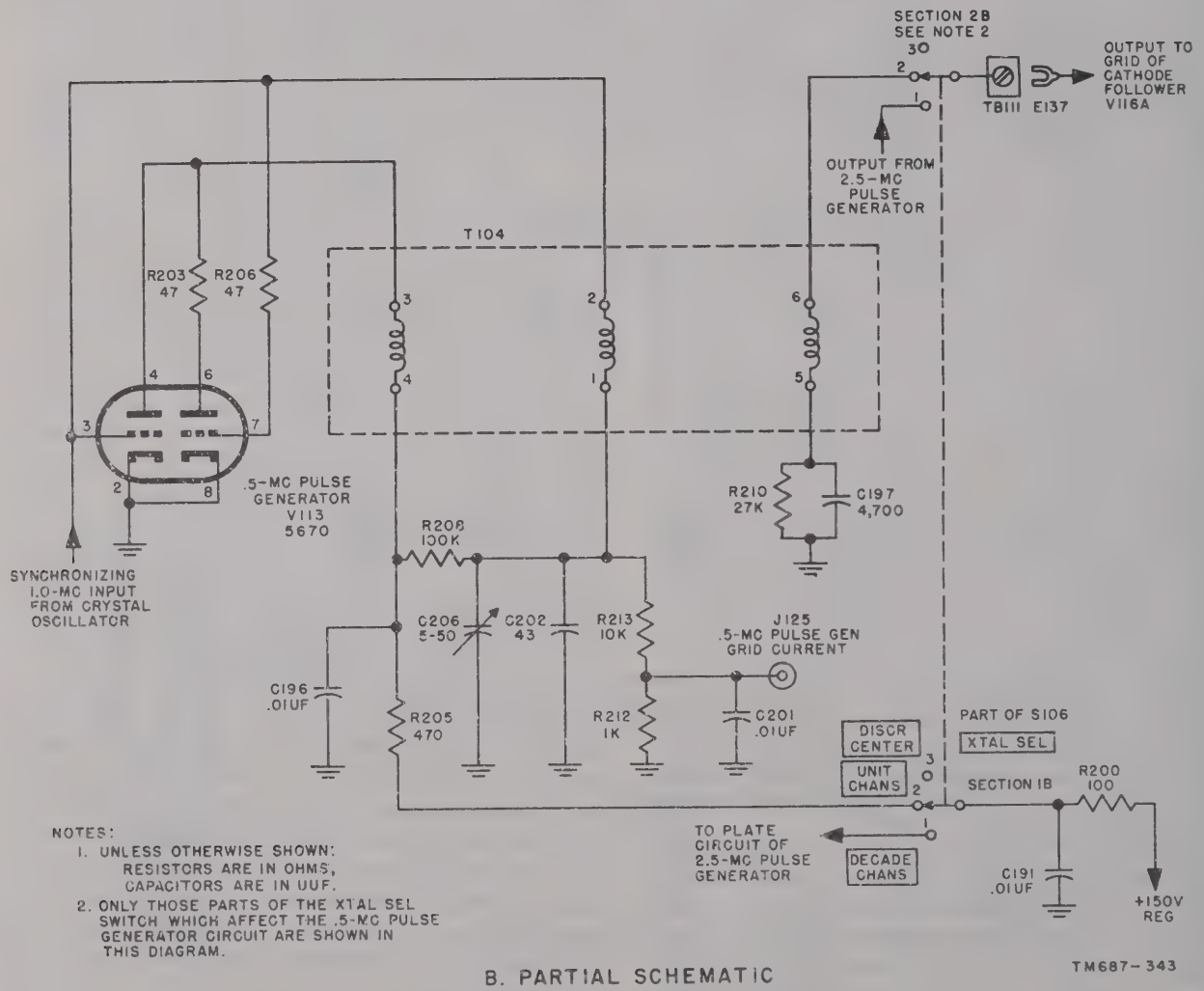

B. PARTIAL SCHEMATIC

Figure 156. Idealized waveforms and .5-mc pulse generator.

230. Pulse Generator, 2.5-mc
(fig. 157)

a. The 2.5-mc output of the crystal oscillator (par. 228) is coupled through capacitor C200 (fig. 157) and is developed across grid resistor R216 (B, fig. 157). The voltage across resistor R216 is applied through parasitic-suppressor resistor R217 to the grid of tube V115. The 2.5-mc voltage is amplified and developed across shunt-fed plate choke L115. The voltage across choke L115 is coupled through capacitor C205 to the pulse-forming network consisting of saturable reactor L113, capacitor C199, and resistor R214.

b. When the instantaneous output voltage is low, choke L113 is not saturated and therefore represents a relatively high impedance. During this time, current flows through resistor R214 and charges capacitor C199. However, early in each half-cycle, choke L113 becomes saturated and its impedance drops to a very low value. Capacitor C199 discharges rapidly through choke L113 and resistor R214. The sharp voltage pulse (A, fig. 157) developed across resistor R214 is the output of the pulse generator and is applied to the grid of the cathode follower (par. 231) when the XTAL SEL switch is in the DECADE CHANS position.

c. Cathode bias is developed across resistor R218 and capacitor C207. Resistor R219 is the screen-dropping resistor and capacitor C211 is the screen bypass capacitor. Plate and screen voltages are supplied from the two-section decoupling filter, which consists of resistors R200 and R315 and capacitors C191 and C212. Plate and screen voltages are supplied to the 2.5-mc pulse generator only when the XTAL SEL is in the DECADE CHANS position. A portion of the grid-lead bias is developed across resistor R215 and capacitor C203 and can be measured at test jack J124 to provide an indication of the grid drive to the 2.5-mc pulse generator.

231. Cathode Follower
(fig. 158)

When the XTAL SEL switch is in the DISCR CENTER position, no input voltage is applied to the cathode follower, tube V116A. In the DECADE CHANS position, the XTAL SEL switch applies the output of the 2.5-mc pulse generator (par. 230) through terminal board TB111 and spade lug E137 to grid resistor R226. The output voltage of the .5-mc pulse generator (par. 229 and A, fig. 156) is developed across grid resistor R226 when the XTAL SEL switch is in the UNIT CHANS position. The voltage developed across resistor R226 is applied to the grid of tube V116A. The plate of tube V116A is held at ground potential by capacitor C216 and the output voltage is developed across cathode resistor R228. Plate voltage for the cathode follower is supplied from the +250-volt supply through the two-section decoupling filter, which consists of resistors R224 and R225 and capacitors C216, C217, and C218. A portion of the dc grid voltage produced by the grid current of tube V116A is developed across resistor R227 and capcitor C219. The voltage across resistor R227 can be measured at test jack J129 to provide an indication of the drive supplied to the cathode follower and of the operation of the cathode follower, tube V116A.

232. Pulsed Oscillator
(fig. 158)

a. General. The output of the cathode follower consists of pulses rich in the harmonics of the crystal-controlled pulse-repetition rate. The pulsed oscillator is not an oscillator in the usual sense but is a spectrum generator. The pulsed oscillator uses a modified tuned Colpitts circuit as a regenerative amplifier. The input pulses are amplified and the input-pulse harmonic frequencies at and near the resonant frequency of the pulsed-oscillator tuned circuit are developed across the tuned circuit. A portion of the tuned-circuit voltage is fed back to the input circuit to produce regeneration of the desired harmonics. The positive feedback is limited to prevent free-running oscillations that would not be crystal-controlled. The output of the pulsed oscillator contains a spectrum of harmonic frequencies of the input pulse-repetition rate. The output frequency spectrum is not continuous, but consists of discrete frequencies. Each of the frequencies in the output is separated from the adjacent frequency outputs by the pulse-repetition rate.

b. Circuit Description. The output of the cathode follower is coupled through capacitor C221 and is developed across grid resistor R230. The voltage across resistor R230 is applied through the parallel combination of grid-leak capacitor C224 and grid-leak resistor R229 to the grid of tube V116B. A portion of the nega-

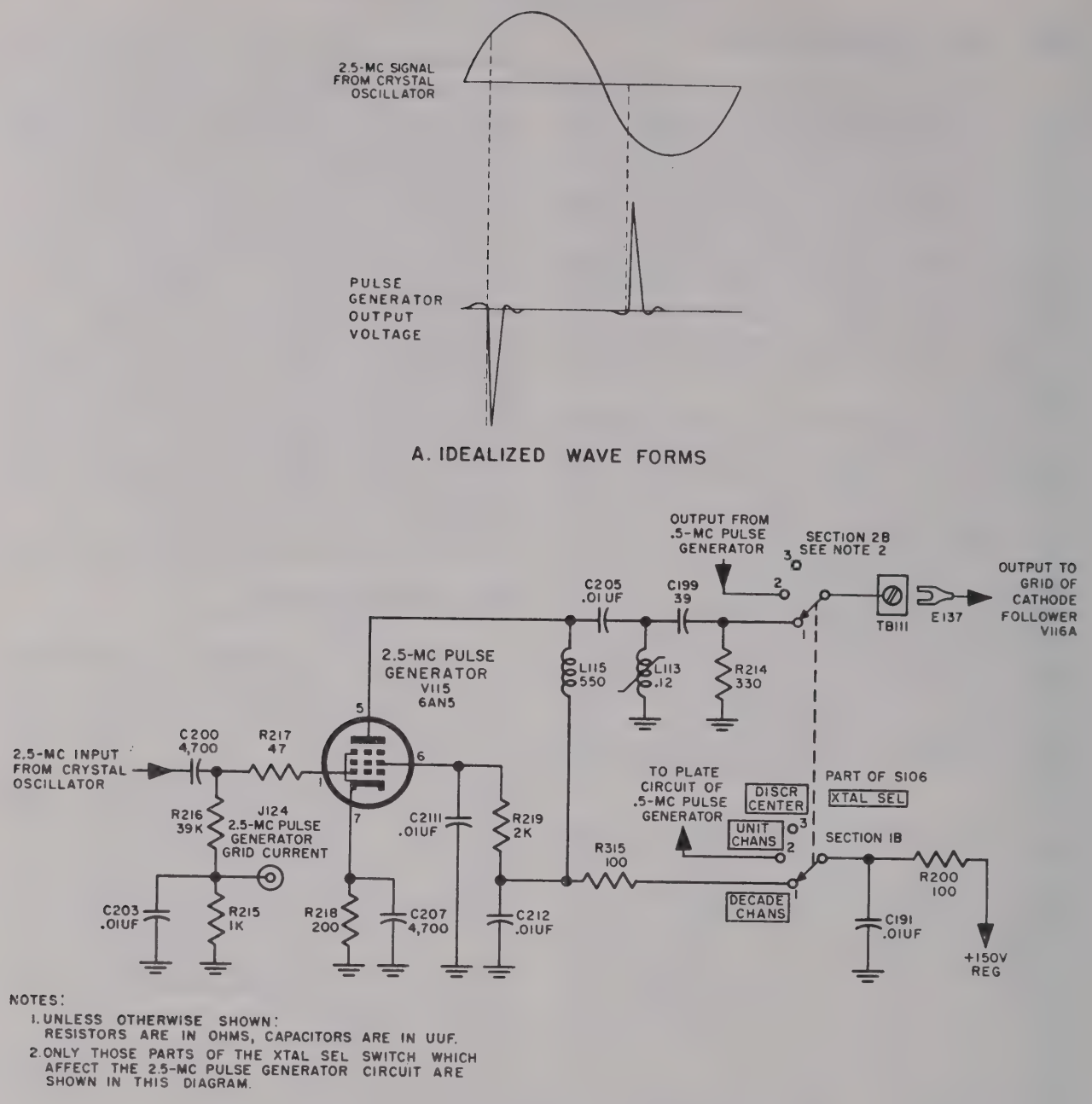

Figure 157. Idealized waveforms and 2.5-mc pulse generator.

tive grid-leak bias is filtered by capacitors C222 and C223 and resistor R231 and is developed across resistor R232. The voltage across resistor R232 can be measured at test jack J130 to provide an indication of the pulse drive to the pulsed oscillator. Crystal rectifier CR104 conducts when a pulse causes the grid voltage to become positive and thereby limits the positive peak grid voltage and grid current. Capacitor C226 represents a sufficient impedance to the input-pulse frequency but with respect to the higher-frequency regenerative circuit, the grid can be considered to be at rf ground. The tuned circuit consists of voltage-dividing capacitors C227 and C228, adjustable trimmer capacitor C225, padder inductor L119, PULSED OSC TUNE inductor L120, and resistor R236. The voltage across capacitor C228 is applied to

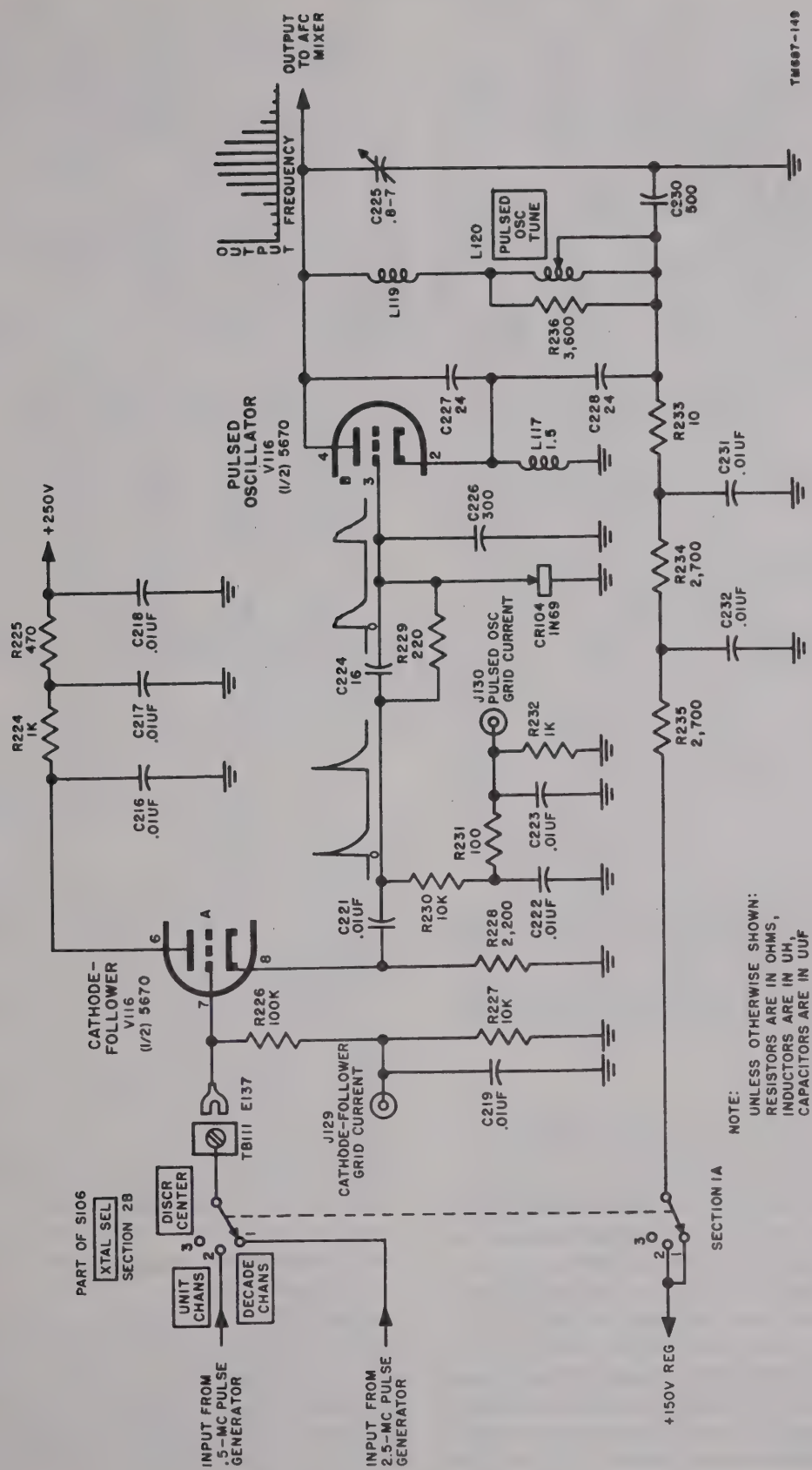

Figure 158. Cathode follower and pulsed oscillator.

the cathode of tube V116B. Thus, as the plate voltage and the tuned-circuit voltage are increasing, the cathode voltage is increasing proportionately due to feedback, and the grid-to-cathode voltage is decreasing; this causes the tube current to decrease and the plate voltage to increase. Thus, positive feedback is obtained. Adjustable trimmer capacitor C225 and padder inductor L119 cause the tuning of the pulsed oscillator to track the PULSED OSC dial. The PULSED OSC switch (fig. 87) is not in the pulsed-oscillator circuit electrically. Operation of the PULSED OSC switch from one position to the other exposes one of the PULSED OSC dials while covering the other. The two dials are marked so that considerable retuning of the pulsed oscillator is required, for example, in order to change from even channel 124 to odd channel 123. This retuning is required (although the base rf oscillator frequency differs by only .25 mc), because on an even channel, the pulsed oscillator operates 10.125 mc above the base rf oscillator and 10.125 mc below on an odd channel. Resistor R236 (fig. 158) loads the tuned circuit so that uncontrolled oscillations will not be produced. Plate voltage is supplied to the pulsed-oscillator circuit through section 1A of XTAL SEL switch S106 and filtered by the three-section decoupling network, which consists of resistors R235, R234, and R233 and capacitors C232, C231, and C230 when the XTAL SEL switch is in either the UNIT CHANS or DECADE CHANS position. Plate voltage is not supplied to the pulsed oscillator when the XTAL SEL switch is in the DISCR CENTER position and the pulsed oscillator is inoperative in this position.

233. Afc Mixer
(fig. 159)

a. The output from the pulsed oscillator is applied through the high-pass filter, which consists of capacitors C229, C234, and C235; inductors L121 and L122; and terminating resistor R237; through the network, which consists of inductor L123 and resistor R239 to the control grid of tube V117. Inductor L123 and resistor R239 improve the high-frequency response of the circuit near the high end of the pulsed-oscillator frequency range. This input to the mixer contains many frequencies; the desired frequency is 10.125 mc above or below the base rf oscillator frequency. The output from the second buffer amplifier (par. 219) is applied through coaxial cable W103 and connectors P117 and J131 to the suppressor grid of tube V117. Resistor R241 matches the impedance of the coaxial cable. This input is at the base rf oscillator frequency. The mixing of the desired pulsed-oscillator frequency and the base rf oscillator frequency produces a difference frequency of 10.125 mc. This difference frequency is developed across the tuned plate circuit, which consists of adjustable inductor L125 and capacitors C241 and C242. Resistor R243 shunts the tuned circuit and increases the bandwidth of the circuit. The output is taken from across capacitor C242, which provides a low-impedance output that approximates the input impedance of coaxial cable that connects to the first afc intermediate amplifier.

b. Plate voltage is supplied through a two-section decoupling filter which consists of resistors R245 and R244 and capacitors C245, C244, and C243. Screen-grid voltage is supplied from the two-stage decoupling filter through dropping resistor R242. Capacitor C239 bypasses rf screen-grid current to ground. Cathode bias is developed across resistor R240 and capacitor C236.

c. When the XTAL SEL switch is in either the UNIT CHANS or DECADE CHANS position, the pulsed oscillator is operative and the afc mixer operates as described in *a* above. When the XTAL SEL switch is in the DISCR CENTER position, the pulsed oscillator is inoperative and the 10.125-mc output of the crystal oscillator is applied directly to the tuned-plate circuit of the afc mixer through blocking capacitor C237. Resistor R238 matches the impedance of coaxial cable W109. The 10.125-mc signal is applied to the plate circuit of the afc mixer through blocking capacitor C237. The filament circuits for the cathode follower and pulsed oscillator V116 and the afc mixer are shown at the bottom of figure 159.

234. First Afc If. Amplifier
(fig. 268)

a. The output of the afc mixer is coupled through coaxial cable W110 to the tuned-grid circuit of the first afc if. amplifier tube V118. The tuned circuit consists of capacitors C246 and C247 and adjustable inductor L126. Resistor R246, which is connected across the tuned

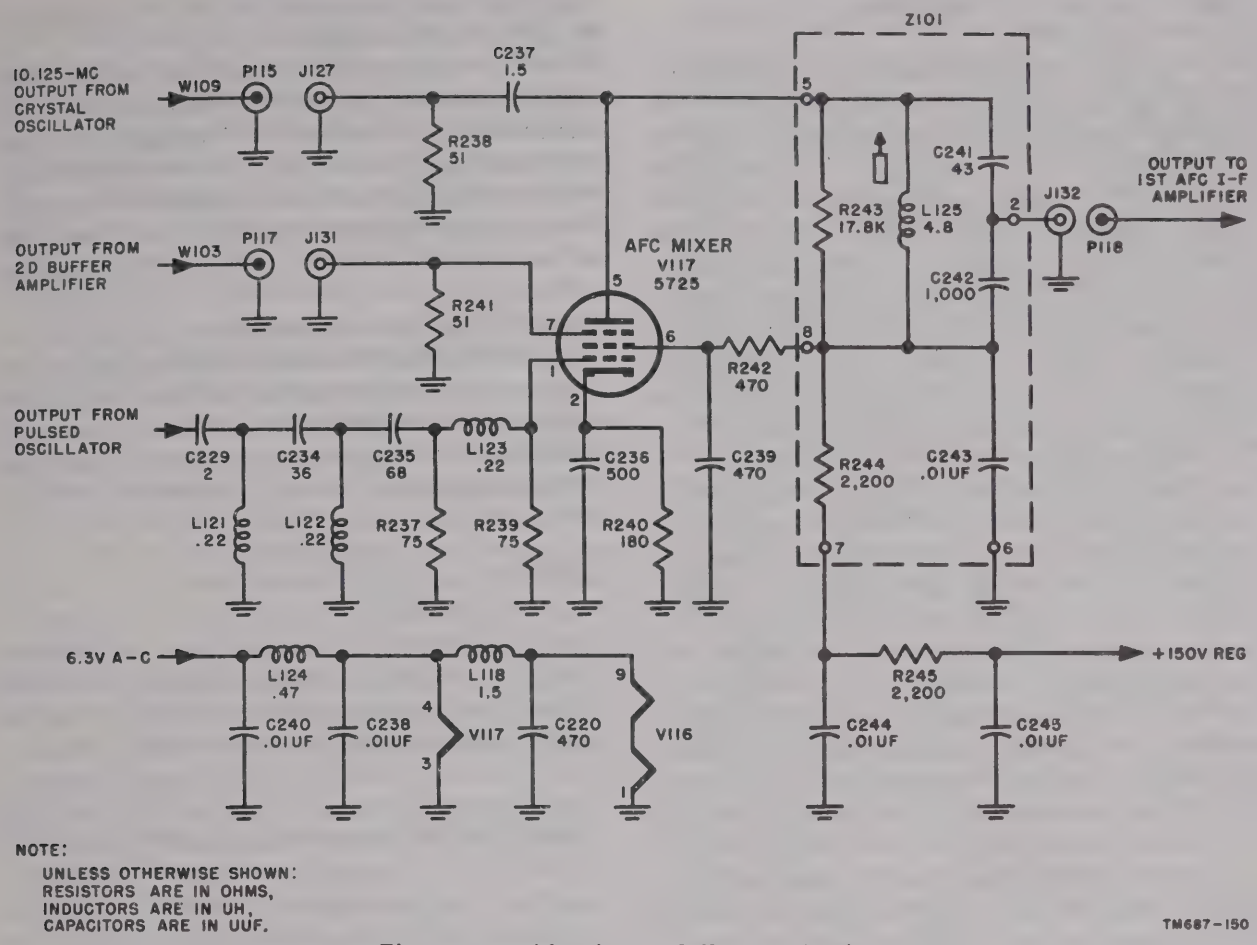

Figure 159. Afc mixer and filament circuits.

circuit, lowers its Q and widens the bandwidth of the circuit. The tuning is adjusted to 10.125 mc by means of the movable powdered-iron core of inductor L126. Capacitor C247 provides the impedance match between the coaxial cable and the tuned circuit. The tuned-circuit voltage is applied to the grid of tube V118 through parasitic-suppressor resistor R249. The amplified voltage at the plate of the tube is developed across the tuned circuit, which consists of fixed capacitor C253 and adjustable inductor L127.

b. Plate and screen-grid voltages are supplied from the decoupling filter, which consists of resistor R262 and capacitor C255 through an additional decoupling filter, which consists of resistor R252 and capacitor C254. The decoupling filter that consists of resistor R262 and capacitor C255 is common to both the first and second afc if. amplifiers. An avc voltage from the first afc limiter (par. 237) is applied to the grid through the two-section decoupling filter, which consists of resistors R247 and R248 and capacitors C248 and C249. Cathode bias is developed across resistors R250 and R251. Resistor R251 is bypassed by capacitor C250. The filament voltage for the first and second afc if. amplifier stages is supplied through the low-pass filter, which consists of inductor L128 and capacitors C252 and C259.

235. Second Afc If. Amplifier
(fig. 268)

The output of the first afc if. amplifier is coupled through capacitor C256 and is developed across resistor R253. Grid resistor R253 shunts the tuned plate circuit of the first afc if. amplifier and widens the bandwidth of the circuit. The if. voltage developed across resistor R253 and the avc voltage from the first afc limiter is applied to the grid of tube V119 through parasitic-suppressor resistor R255. The plate, screen-grid, and cathode circuits of the second afc if. amplifier are identical to those of the first afc if. amplifier.

236. Third Afc If. Amplifier
(fig. 268)

a. The grid circuit of the third afc if. amplifier is the same as that of the second afc if. amplifier except that no avc voltage is applied to the third afc if. amplifier. The amplified voltage at the plate is developed across the tuned circuit, which consists of fixed capacitor C264 and adjustable inductor L130. Plate and screen-grid voltages are supplied through the decoupling filter, which consists of resistor R264 and capacitor C265. Cathode bias is developed across resistor R263; capacitor C263 bypasses the if. component of the cathode current.

b. The output of the third afc if. amplifier is inductively coupled into the tuned circuit, which consists of fixed capacitor C266 and adjustable inductor L131. This tuned circuit is shunted by resistor R267 to widen the bandwidth. A portion of the voltage developed in this tuned circuit is rectified by crystal rectifier CR105. The rectified voltage is filtered by the two-section RC filter which consists of capacitors C267, C268, and C269 and resistors R265 and R266. The filtered voltage is applied to the transmitter MEASURE meter circuit and is measured when the MEASURE switch is in the RF CHAN TUNE position. As the base rf oscillator is tuned through an rf channel, the output of the third afc if. amplifier passes through a maximum. The maximum reading on the MEASURE meter is used as an indication of the correct base rf oscillator tuning.

237. First Afc Limiter
(fig. 268)

a. The output from the plate of the third afc if. amplifier is coupled through capacitor C270 and is developed across resistor R269. The voltage across resistor R269 is applied to the grid of tube V121 through parasitic-suppressor resistor R268. The applied signal causes the grid to draw current. The grid current flows through resistors R268 and R269 and charges capacitor C271. Between the pulses of grid current, capacitor C271 discharges through resistors R270 and R271 to develope dc grid bias. The voltage across R271 is applied through the RC filter, which consists of resistor R259 and capacitors C272 and C251 to the grid circuits of the first and second afc if. amplifiers for automatic volume control. The filtered avc voltage can be measured at test jack J133. The voltage at test jack J134 is an indication of the drive supplied to the first limiter grid.

b. The screen-grid voltage applied to tube V121 is limited by resistor R273. Because of the relatively low screen-grid voltage and large if. input signal, tube V121 operates as an overdriven amplifier and limits positive and negative peaks of the input signal. The screen-grid is held at ac ground potential by capacitor C273.

c. The limited and amplified signal at the plate of the first afc limiter is developed across the tuned circuit consisting of fixed capacitor C274 and adjustable inductor L132. Plate and screen-grid voltages are supplied through the decoupling filter, which consists of resistor R274 and capacitor C275.

238. Second Afc Limiter
(fig. 160)

a. Grid Circuit. The output of the first afc limiter is coupled through capacitor C277 and is developed across grid resistor R275. Resistor R275 shunts the tuned plate circuit of the first afc limiter and serves to widen the bandwidth. The if. signal is applied to the grid of tube V122 through parasitic suppressor R277. The grid current of the second afc limiter produces a negative bias across resistor R276, which is bypassed by capacitor C278. The negative bias is filtered by resistor R278 and capacitor C280 and applied to test jack J136. The voltage at test jack J136 can be measured to provide an indication of the operation of the second limiter, of the if. drive supplied to this stage, and of the tuning of the plate circuit of the first afc limiter.

b. Screen-grid Circuit. The screen grid is connected through parasitic-suppressor resistor R280 and the three-section RC decoupling filter, which consists of resistors R282, R283, and R284 and capacitors C282, C283, C284 and C285 to the movable contact of dual potentiometer R139. The parallel-connected sections of potentiometer R139 are part of the voltage divider that consists also of resistors R310 and R311 and is connected between ground and the decoupling filter which consists of resistor R314 and capacitor C114B. The relatively low screen-grid voltage causes the second afc limiter to operate as an overdriven amplifier. Adjustment of potentiometer R139, the DISCR RF DRIVE control, varies the dc screen-grid voltage and determines the amount of drive supplied to the

afc discriminator (par. 205). This, in turn, determines the ac output of the afc discriminator, which provides the indication of the modulation level of the transmitter. The correct adjustment of the DISCR RF DRIVE potentiometer, therefore, calibrates the ac output of the afc discriminator. In some second afc limiter circuits on Order No. 16811–Phila–51, the value of resistor R310 is 4,300 ohms. The lower value of R310 (3,300 ohms) provides a greater range for DISCR DRIVE potentiometer R139.

c. Plate Circuit. The limited and amplified signal at the plate of the second afc limiter is developed across the tuned circuit that consists of fixed capacitor C286 and adjustable inductor L133. Dc plate voltage is supplied through the three-section RC decoupling filter, which consists of resistors R285, R286, and R279 and capacitors C287, C288, C281, C276, and C279. Two outputs of the second afc limiter are supplied to the afc discriminator. One output is inductively coupled from inductor L133 and the other is directly coupled from the plate of tube V122.

239. Afc Discriminator and FREQ DRIFT Meter

(figs. 161 and 162)

a. The if. signal voltage applied to each of the two diode plates of the discriminator tube, V123 (fig. 162), from the output of second afc limiter V122 is the resultant of two component voltages. One component of the resultant voltage is caused by the capacitive coupling through capacitors C290 and C291. This if. voltage that appears on the plates of the discriminator is in phase with the output voltage of the second limiter. The polarity of this signal is the same on both plates. The second voltage component of the resultant is inductively coupled from inductor L133 to inductor L134. The inductively coupled voltage components that appear on the plates of the discriminator are 90° out of phase with the voltage component that is capacitively coupled to the plates of the discriminator and are 180° out of phase with each other.

b. The double-tuned circuit of coupling network Z107 is resonant at the intermediate frequency of 10.125 mc. The voltage, E1, across the primary circuit is opposite in polarity to the voltage, E2, induced in the secondary winding L134. The tuned secondary circuit can be considered as a series-resonant circuit. At resonance, secondary current I2 is in phase with induced secondary voltage E2. The reactive voltage drop across the secondary winding L134 is 90° out of phase with secondary current I2. With reference to the center tap position, the two voltages, E3 and E4, are equal in magnitude and 180° out of phase with each other. This

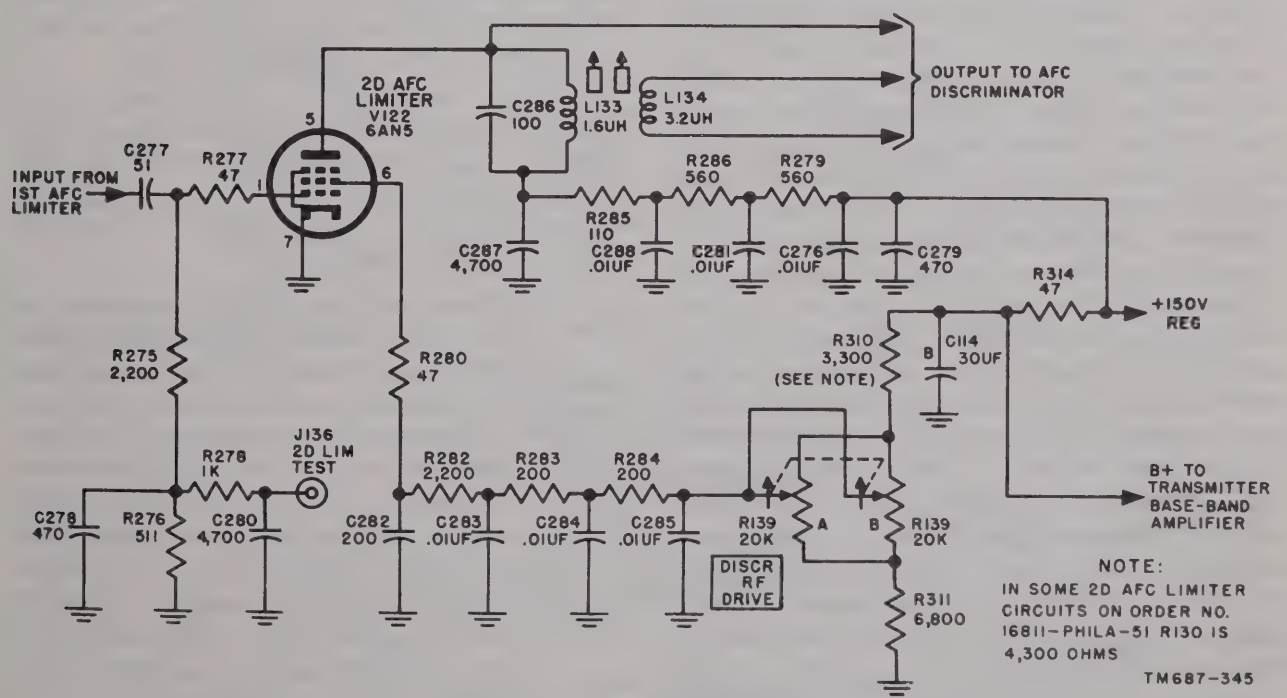

Figure 160. Second afc limiter.

condition, at resonance, is shown vectorially in A, figure 161. At a frequency *above* resonance, induced voltage E2 remains 180° out of phase with E1. However, secondary current I2 will lag the induced voltage, E2, because the secondary tuned circuit now presents an inductive reactance to the secondary current I2. Because the reactive voltage drops E3 and E4 across the two halves of the secondary winding are 90° out of phase with the secondary current and 180° out of phase with each other in reference to the center tap position, E3 will now lead E1 by less than 90° and E4 will lag E1 by more than 90°. This condition is shown in B, figure 161. At frequency *below* resonance, the secondary tuned circuit presents a capacitive reactance to the induced voltage E2, and now E3 will lead E1 by more than 90° and E4 will lag E1 by less than 90°. This is shown in C, figure 161.

c. The resultant if. voltage at the plate of tube V123A is E1 plus E3. This is represented vectorially as ED1 (D, fig. 161). The rf voltage components applied to the plate of tube V213B are E1 plus E4. This is shown as ED2. The vector additions of the if. voltages impressed across diodes V123A and V123B are indicated at resonance in D, figure 161. E, figure 161 shows the resultant if. voltages on the plates of the discriminator when the frequency is *above* resonance, and F, figure 161 indicates the resultants when the frequency is *below* resonance. When the phase angle between E1 and either E3 or E4 is decreased from 90°, the resultant voltage increases, and when the phase angle is increased from 90°, the resultant voltage decreases. Thus, the if. voltage at pin 2 of V123B will increase and that at pin 7 of V123A will decrease as the frequency goes below resonance (fig. 162). At frequencies above resonance, the opposite effect is produced. The rectified outputs of the two diodes appear across diode load resistors R288 and R290. Because these outputs are added algebraically, the resulting total output will be a voltage that follows the frequency deviations of the discriminator input signal. Inductor L135 provides a dc return path for the diode circuits. Resistor R289 which is bypassed by capacitor C293 is connected in series with load resistor R288. The dc voltage across resistor R289 is proportional to the drive supplied to the afc discriminator and is applied to the transmitter MEASURE meter when the MEASURE switch is operated to the DISCR RF DRIVE position.

d. The sum of the voltages across resistors R288 and R290 is applied to the de-emphasis and filter circuit, which consists of inductors L136 and L137 and capacitors C296, C297, and C298. This filter removes the if. components from the discriminator output. The output of the filter consists both of an ac voltage, which corresponds to the modulating signal that was applied to the reactance modulator, and of a dc voltage, which is proportional to the difference between the average (center) frequency of the input signal to the discriminator and the frequency to which the discriminator is tuned (10.125 mc). The de-emphasis (greater attenuation at 68 kc than at 1 kc) introduced by the filter compensates for the pre-emphasis of the higher frequency base-band signals that was introduced in the transmitter input circuits.

e. The ac output of the discriminator is coupled through blocking capacitor C299 and is developed across the voltage divider, which consists of fixed resistor R292 and potentiometer R293. The output of the potentiometer is applied to the transmitter MEASURE meter when the MEASURE switch is in the MOD 1KC IN, MOD 68KC IN, or MOD ADJ position. The measurement of the ac output of the discriminator provides an indication of the modulation level produced in the transmitter by either a 68-kc or 1-kc test signal of a reference level.

f. The dc output of the discriminator is filtered by resistor R291 and C295. The filtered output is applied through the PULSED OSC switch to the FREQ DRIFT meter and also through the AFC switch in the ON position to the afc 60-cps modulator.

(1) When the transmitter is operating on an odd channel, the pulsed-oscillator frequency is operated below the base rf oscillator. An increase in the base rf oscillator center frequency will produce an increase in the intermediate frequency and a positive dc output will be produced by the afc discriminator. The PULSED OSC switch in the ODD CHANNELS position connects the dc output of the discriminator to the positive terminal of the FREQ DRIFT meter so that an increase in

base rf oscillator frequency produces an upscale deflection.

(2) When the transmitter is operating on an even channel, the pulsed-oscillator frequency is operated above the base rf oscillator. An increase in the base rf oscillator center frequency will produce a decrease in the intermediate frequency and a negative dc output will be produced by the afc discriminator. The PULSED OSC switch in the EVEN CHANNELS position connects the dc output of the discriminator to the negative terminal of the FREQ DRIFT meter so that an increase in the base rf oscillator frequency will again produce an upscale deflection. Thus, the PULSED OSC switch serves as a reversing switch for the FREQ DRIFT meter.

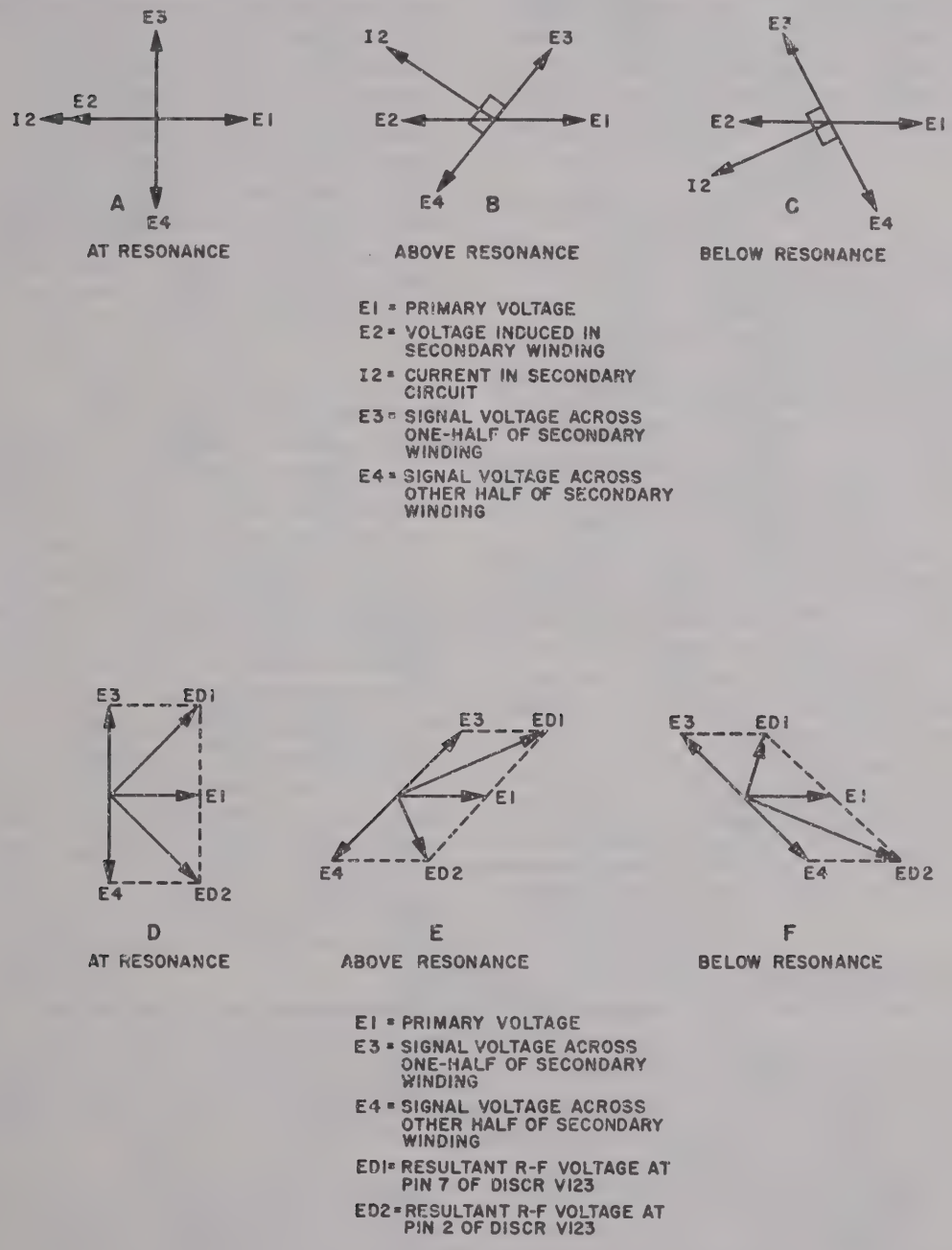

Figure 161. Vector diagrams of afc discriminator.

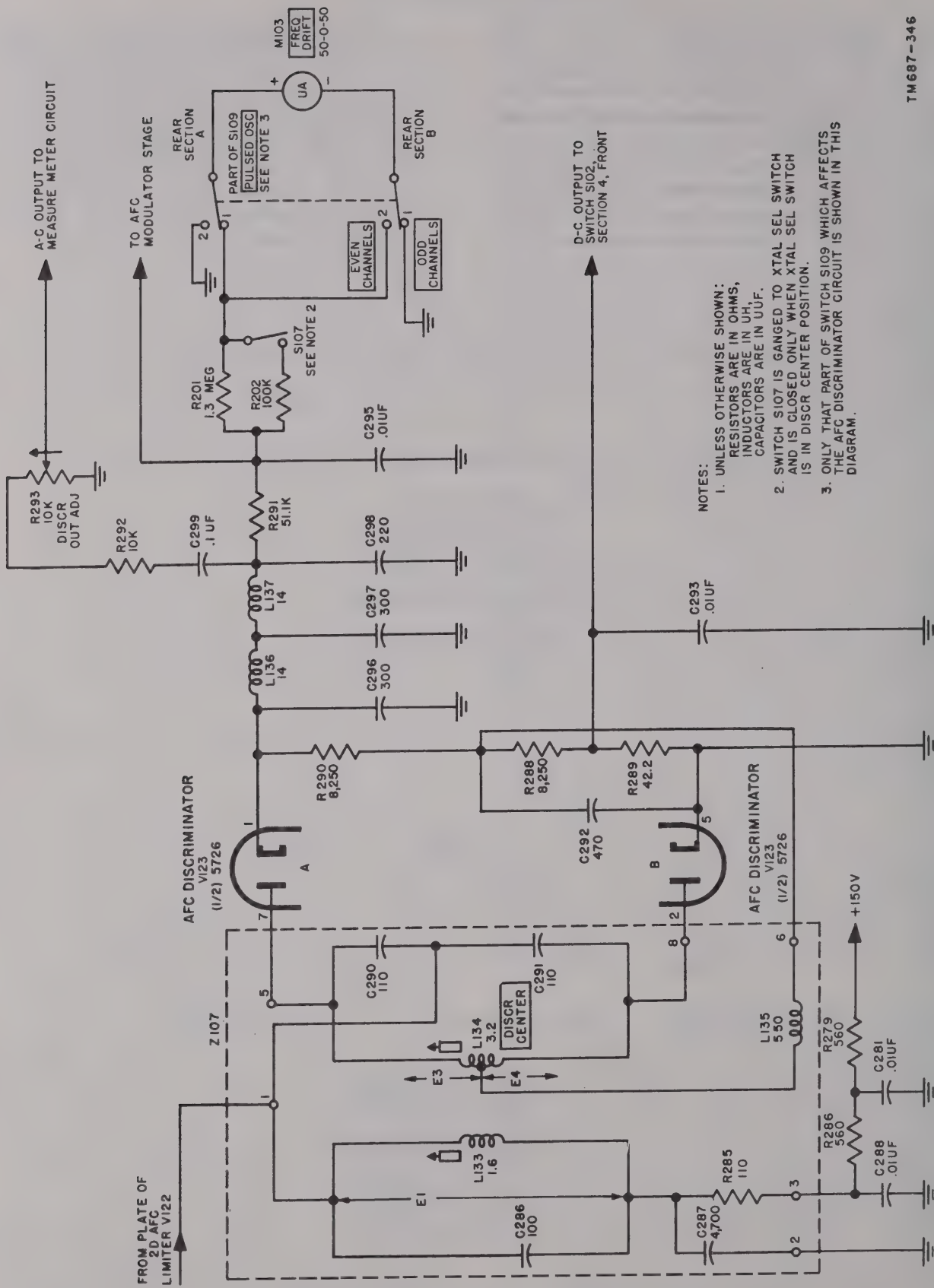

Figure 162. Afc discriminator.

240. Afc 60-cps Modulator (fig. 268)

a. When AFC switch S108 is in ON position, the dc output of the afc discriminator is applied to the grid of tube V124A. The grid of tube V124B is held at ground potential. A 60-cps signal is applied from the voltage divider, which consists of resistors R300 and R299 to the cathodes of tubes V124A and V124B. The plates of the tubes are connected to a push-pull output circuit. Resistor R301 and a portion of variable resistor R302 comprise the plate load of tube V124A. Resistor R303 and the remainder of resistor R302 comprise the plate load of tube V124B. Adjustment of resistor R302 increases the plate load of one of the sections of tube V124 while decreasing the plate load of the other to equalize the gains of the two sections. The total voltage across resistors R301, R302, and R303 is applied to primary winding 1–2 of interstage transformer T105.

b. When the output of the discriminator is large, capacitor C300 in the grid circuit of V124A charges up toward the voltage across resistor R294. As the afc motor corrects the base rf oscillator frequency, the discriminator output is decreasing and capacitor C300 discharges. The discharge of capacitor C300 reduces the input voltage to the modulator beyond the reduction caused by the correction of the base radio frequency. This compensates for the inertia of the afc motor and prevents hunting in the afc system. Resistors R296 and R298 and capacitors C301 and C302 comprise a low-pass filter that prevents the ac output of the discriminator from affecting the afc system. Capacitor C303 keeps the grid of tube V124B at ground potential. Resistor R297 provides the same dc resistance to ground for tube V124B as resistors R298, R296, and R295 do for tube V124A.

c. When the dc output of the discriminator is zero, both sections of tube V124 operate at the same gain and the 60-cps voltages at the plates of the tubes are equal. No net 60-cps voltage appears across winding 1–2 of transformer T105.

d. When the dc output of the discriminator is positive, tube V124A operates at a higher gain than tube V124B. Therefore, the 60-cps voltage that appears between the plate of tube V124A and the movable contact of resistor R302 exceeds the 60-cps voltage that appears between the movable contact and the plate of tube V124B. The difference between these voltages appears between terminals 1 and 2 of transformer T105. The larger the positive output of the discriminator, the larger the difference voltage and the larger the voltage applied to transformer T105.

e. When the output of the discriminator is negative, the gain of tube V124A is less than that of tube V124B and the action of the circuit is reversed. The 60-cps voltage applied to transformer T105 is 180° out of phase with the voltage applied when the discriminator output was positive.

241. Afc 60-cps Amplifier (fig. 268)

The output of transformer T105 is applied to the grid of the first 60-cps amplifier, tube V125A, is amplified and developed across plate load resistor R305. The voltage across resistor R305 is coupled through capacitor C304 and is developed across the parallel combination of capacitor C305 and grid resistor R306. Capacitor C305 corrects for the phase shift produced in capacitor C304. The voltage across resistor R306 is applied to the grid of tube V125B, is amplified and developed across plate load resistor R308. Negative-feedback voltage is provided from resistor R308 through coupling capacitor C306 and resistor R307 and is developed across resistor R304, the cathode resistor of tube V125A. The amplifier output is applied to the afc motor through the closed contacts of the AFC switch to the PULSED OSC switch. The PULSED OSC switch serves as a reversing switch to provide the correct rotation of the afc motor for odd- or even-channel operation.

242. Transmitter MEASURE Meter Circuit

a. General. The transmitter MEASURE meter circuit provides a means of observing the output level of the l-kc oscillator and the modulation level produced by it, the level of the incoming l-kc and 68-kc signals and the modulation levels produced by them, the amplitude of the signal in the if. amplifier (rf channel tuning indicator), and the rf drive on the discriminator. For ac measurements, a selective filter for each frequency (l kc and 68 kc), an amplifier circuit, and a crystal rectifier are used

in addition to the meter. The meter scale is marked in db for the ac applications with the 0-db reference set at 35 μa. Although 1-kc signals are normally transmitted through the system at a level of +10 dbm, and 68-kc signals at 0 dbm, the MEASURE meter reads 0 db for the normal signal level of either frequency. This is accomplished by the use of additional attenuation in the MEASURE meter circuit in the l-kc positions. For dc measurements, the meter scale is calbrated from 0 to 50 μa. Switching to the various metering points is accomplished by a nine-position switch. Simplified schematic diagrams that represent the various switch positions are shown in figures 163 through 168.

b. Position 1, RF CHAN TUNE (fig. 163). This position provides a visual indication for tuning the base rf oscillator to the correct channel. Crystal rectifier CR105 connects to a tap on inductor L131 and rectifies a portion of the output voltage of the third afc if. amplifier. Proper tuning of the base rf oscillator is indicated by MEASURE meter M101 when this rectified voltage reaches its maximum value. Capacitors C267, C268, and C269 and resistors R265 and R266 comprise a filter network that removes the if. component in the output of this tuning indicator circuit.

c. Position 2, 1KC ADJ (fig. 164). In this position, the switch connects the l-kc oscillator output through resistor R322 to the metering circuit for the purpose of adjusting the oscillator output to a reference value (.775 volt at the output of the oscillator results in a zero reference level, which appears as 35 μa on the meter). The l-kc signal is fed to the meter through coupling capacitor C112, crystal rectifier CR101, and current-limiting resistors R126, R318, and R319. In some metering circuits, 180-μμf capacitor C312 is connected in parallel with crystal rectifier CR101, thus bypassing any stray rf which may have been picked up around the crystal rectifier. This is done to prevent an erroneous reading on the meter M101. Resistor R123 provides a dc return path for the crystal rectifier. The rectified meter current is filtered by capacitor C110.

d. Position 3, MTR CAL (fig. 165).

(1) The output of the l-kc oscillator, in this position, is applied to the grid of first meter amplifier V103, through an attenuator network that consists of resistors R127 and R312. Resistor R129 is the grid leak. Resistor R130, bypassed by capacitor C113, provides cathode bias. Screen-grid voltage is

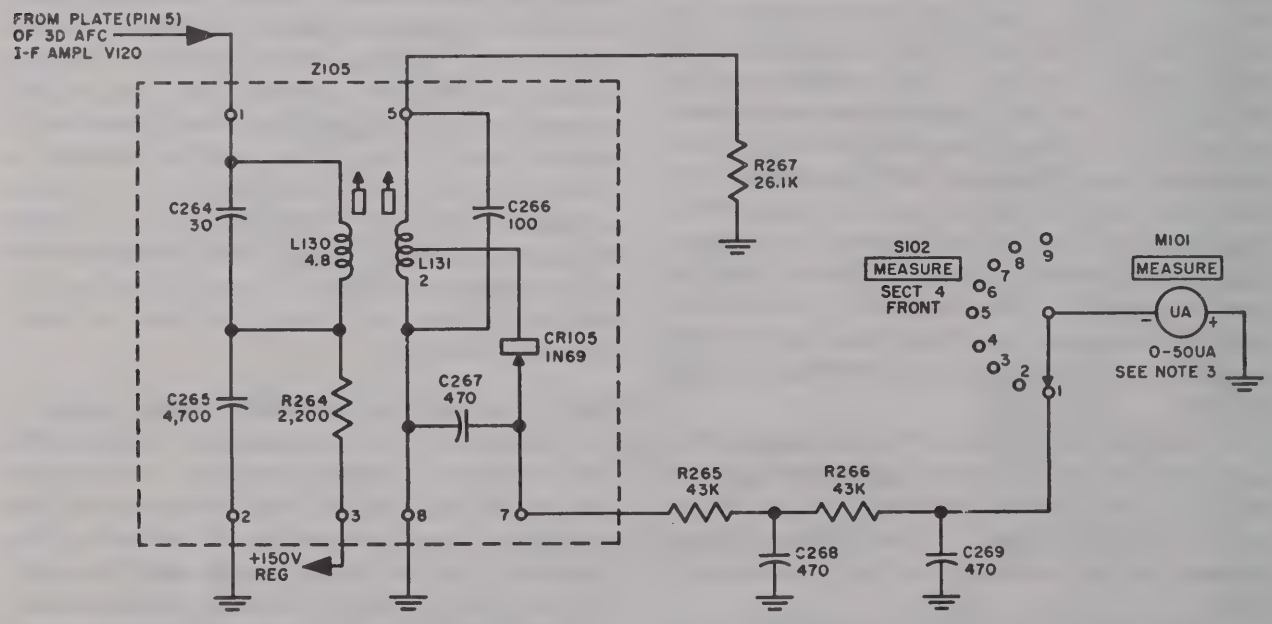

NOTES:
1. UNLESS OTHERWISE SHOWN: RESISTORS ARE IN OHMS, INDUCTORS ARE IN UH, CAPACITORS ARE IN UUF. FOR SIMPLICITY, SWITCH CIRCUITS NOT PERTAINING TO THE RF CHAN TUNE POSITION HAVE BEEN OMITTED.
3. METER RANGE FOR THIS POSITION IS 0-50UA.

TM 687-384

Figure 163. Transmitter MEASURE meter circuit, RF CHAN TUNE position.

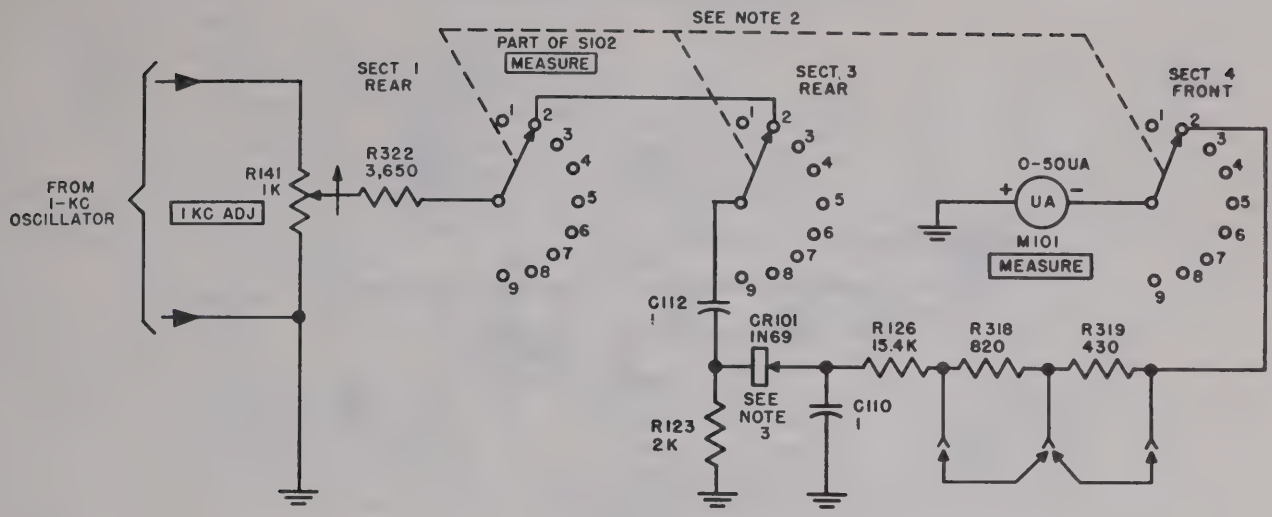

NOTES:

1. UNLESS OTHERWISE SHOWN: RESISTORS ARE IN OHMS, CAPACITORS ARE IN UF.
2. FOR SIMPLICITY, SWITCH CIRCUITS NOT PERTAINING TO THE 1KC ADJ POSITION HAVE BEEN OMITTED.
3. IN SOME METERING CIRCUITS ON ORDER NO. 16811-PHILA-51, 180 UUF CAPACITOR C312 IS CONNECTED IN PARALLEL WITH CR101.

TM687-347

Figure 164. Transmitter MEASURE meter circuit, 1KC ADJ position.

applied through resistor R132. Capacitor C114A bypasses the ac screen-grid current to ground.

(2) The amplified signal that appears across the plate load resistor R131 is coupled to the grid of second meter amplifier V104A through capacitor C115, resistor R323, and potentiometer R134 (MTR CAL).

(3) The signal voltage developed across cathode load resistor R136 is coupled to the crystal rectifier CR101 by capacitor C112. The rectified signal is fed through current-limiting resistors R126, R318, and R319 to the MEASURE meter M101. The amplifier gain is adjusted by potentiometer R134 (MTR CAL) to equal the loss inserted by the attenuator (resistors R312, R127, and R129). This is accomplished by adjusting the meter reading to give the same reading in this position as it did in the 1KC ADJ position.

e. Position 4, DISCR RF DRIVE (fig. 166). To provide an indication for tuning of the secondary of discriminator network Z107, and for setting the drive on the discriminator by means of the second limiter screen-voltage control R139, the voltage drop developed across resistor R289 is applied to MEASURE meter M101 when MEASURE switch S102 is in the DISCR RF DRIVE position. Capacitor C293 bypasses the if. components to ground.

f. Position 5, 1KC IN (fig. 167). In switch position 1KC IN, the metering circuit is bridged across INPUT ADJ attenuator R101 to measure the level of the incoming 1,000-cps line tone. Resistor R122 is an isolation resistor. Filter FL103 is a high-impedance 1-kc selective filter.

g. Position 6, 68KC IN (fig. 167). In this position, the metering circuit is bridged across the INPUT ADJ attenuator to measure the level of the 68-kc line pilot tone. Filter FL102 is a high-impedance 68-kc selective filter. Variable capacitor C111 and the stray wiring capacity tune the output section of the filter. Resistor R124 is shunted across the filter to equalize the output of the 68-kc and the 1-kc filters.

h. Position 7, MOD 1KC IN (fig. 167). The ac output of the discriminator is connected to the metering circuit to indicate the modulation level. Filter FL103 limits the metering to the modulation produced by only the 1-kc line tone.

i. Position 8, MOD 68KC IN (fig. 167). In

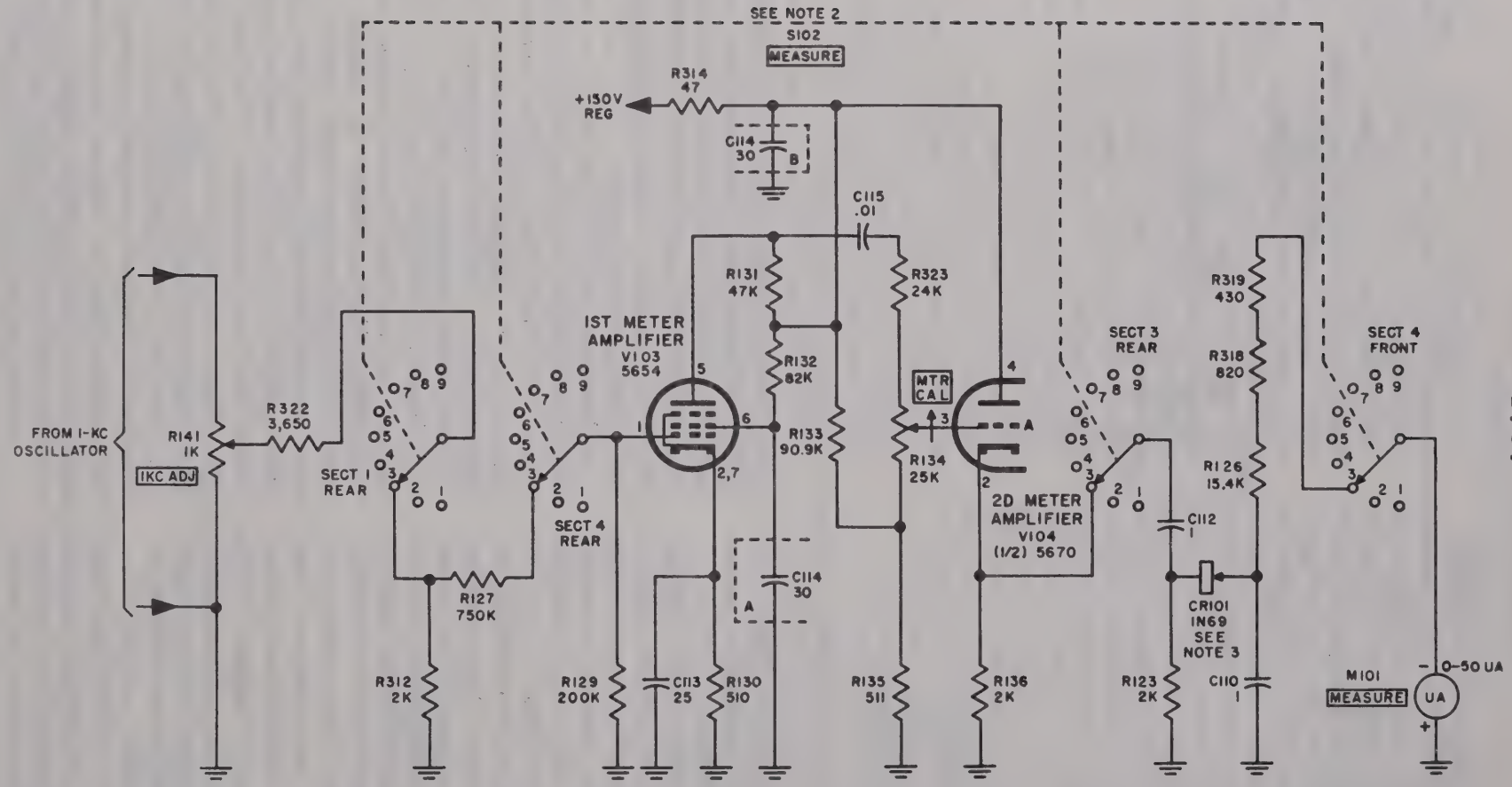

NOTES:

1. UNLESS OTHERWISE SHOWN: RESISTORS ARE IN OHMS, CAPACITORS ARE IN UF.
2. FOR SIMPLICITY, SWITCH CIRCUITS NOT PERTAINING TO THE MTR CAL POSITION HAVE BEEN OMITTED.
3. IN SOME METERING CIRCUITS ON ORDER NO. 16811-PHILA-51, 1800UUF CAPACITOR C312 IS CONNECTED IN PARALLEL WITH CR101.

TM 687-348

Figure 165. Transmitter MEASURE meter circuit, MTR CAL position.

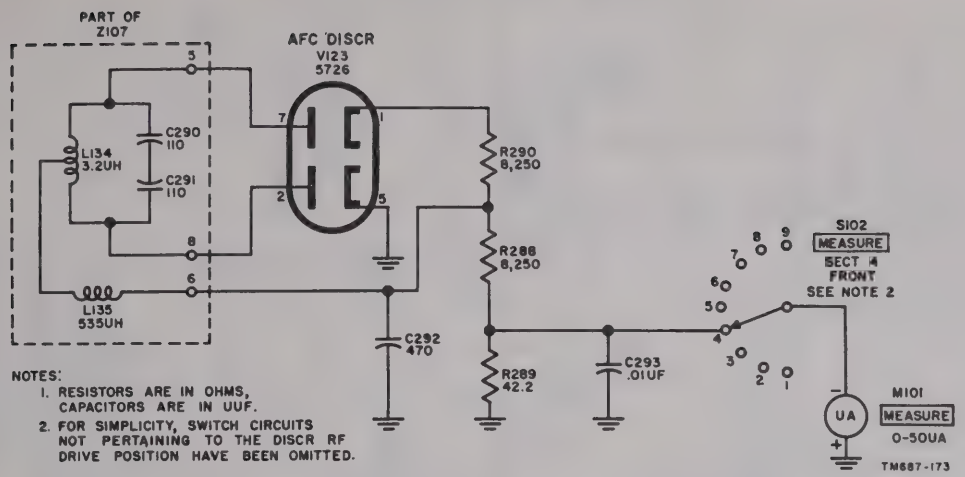

Figure 166. Transmitter MEASURE meter circuit, DISCR RF DRIVE position.

this position, the ac output of the discriminator is fed to the metering circuit to indicate the modulation level of the incoming 68-kc signal. Filter FL102 limits the metering to the modulation produced by only the 68-kc line tone.

j. Position 9, MOD ADJ (fig. 168). In this position, plate voltage is supplied to the 1-kc oscillator and the output of the oscillator is applied to the base-band amplifier through MOD ADJ potentiometer R104. In addition, the metering circuit is connected to the ac output of the discriminator to indicate the modulation level produced by the output of the 1-kc oscillator (par. 243).

(1) This position of the MEASURE switch is used when adjusting the MOD TRIM control (capacitor C131), which permits tuning the reactance modulator accurately to the base rf oscillator frequency. When making this adjustment, the MTR SENS switch is held in the INCR position. One section of the MTR SENS switch shorts out resistors R126, R318, and R319 to increase the sensitivity of the MEASURE meter. The increased sensitivity is provided because of the critical nature of the MOD TRIM adjustment. The other section of the MTR SENS switch connects the ungrounded side of resistor R123 through resistor R121 to +150 volts. This connection establishes a bias voltage of about .5 volt across resistor R123 and hence across crystal rectifier CR101. The negative peak output of the second meter amplifier must exceed the bias voltage before the crystal rectifier conducts and an indication is obtained on the MEASURE meter. Thus, when the MOD TRIM control is out of adjustment, no indication appears on the MEASURE meter. As the MOD TRIM control is brought into adjustment, the MEASURE meter needle will deflect and the deflection will increase rapidly to a sharply defined peak that indicates correct adjustment.

(2) The MOD ADJ position of the MEASURE switch also is used when adjusting the MOD ADJ control. The MTR SENS switch is in its normal locking position for this adjustment. Therefore, crystal rectifier CR101 operates at zero bias and the meter operates with normal sensitivity.

243. Oscillator, 1-kc
(fig. 169)

a. The 1-kc oscillator uses half of twin-triode tube V104 in a modified Hartley oscillator circuit. The tuned circuit consists of the inductance of winding 3–4–5 of transformer T102 and capacitors C117, C118, C120, and C122. Either or both capacitors C117 and C120 may be connected in the circuit to obtain the correct tuning of the circuit. Plate voltage is applied to the 1-kc oscillator in the 1KC, ADJ, MTR CAL, and MOD ADJ positions of the MEASURE

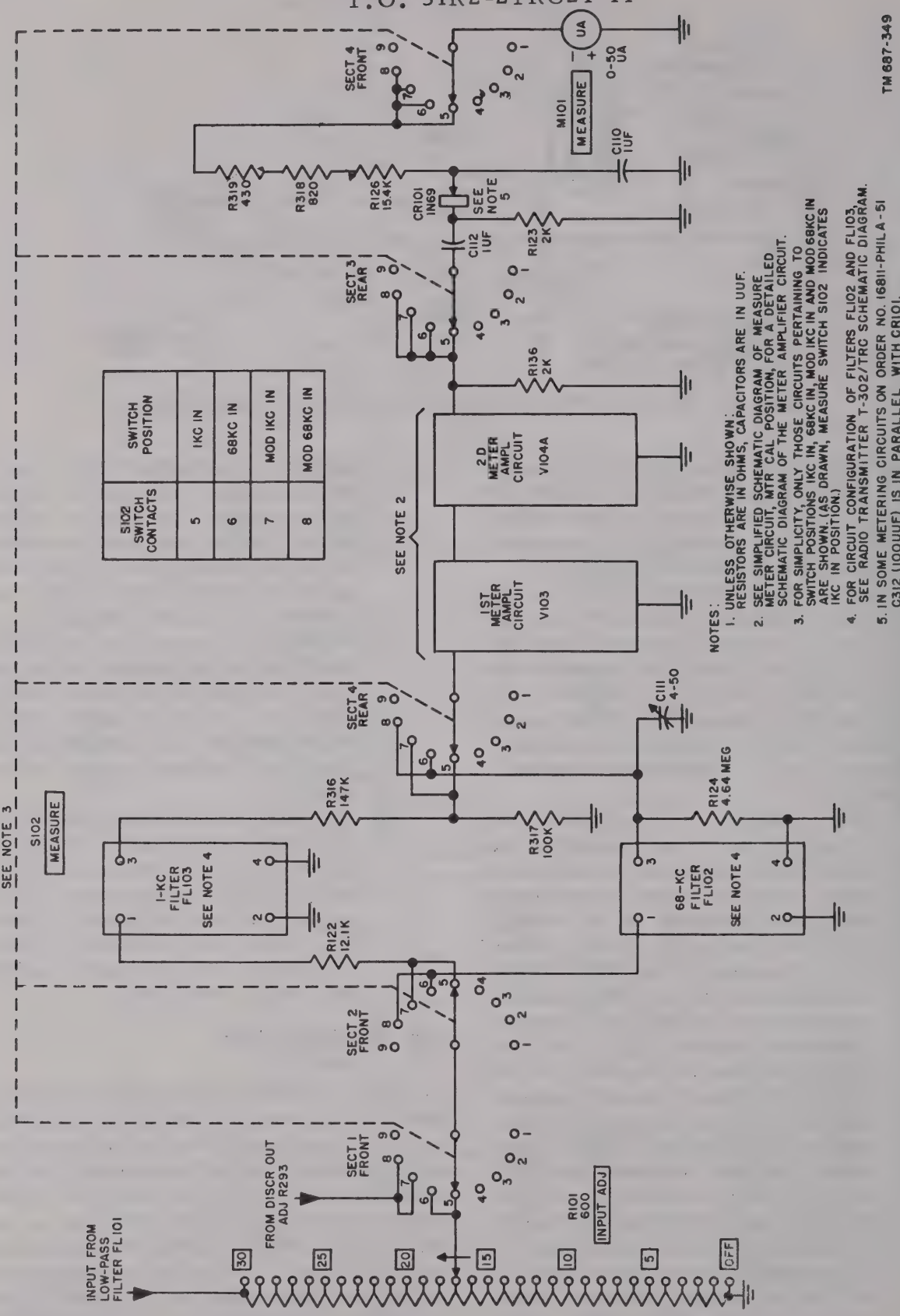

Figure 167. Transmitter MEASURE meter circuit, 1KC IN, 68KC IN, MOD 1KC IN, and MOD 68KC IN positions.

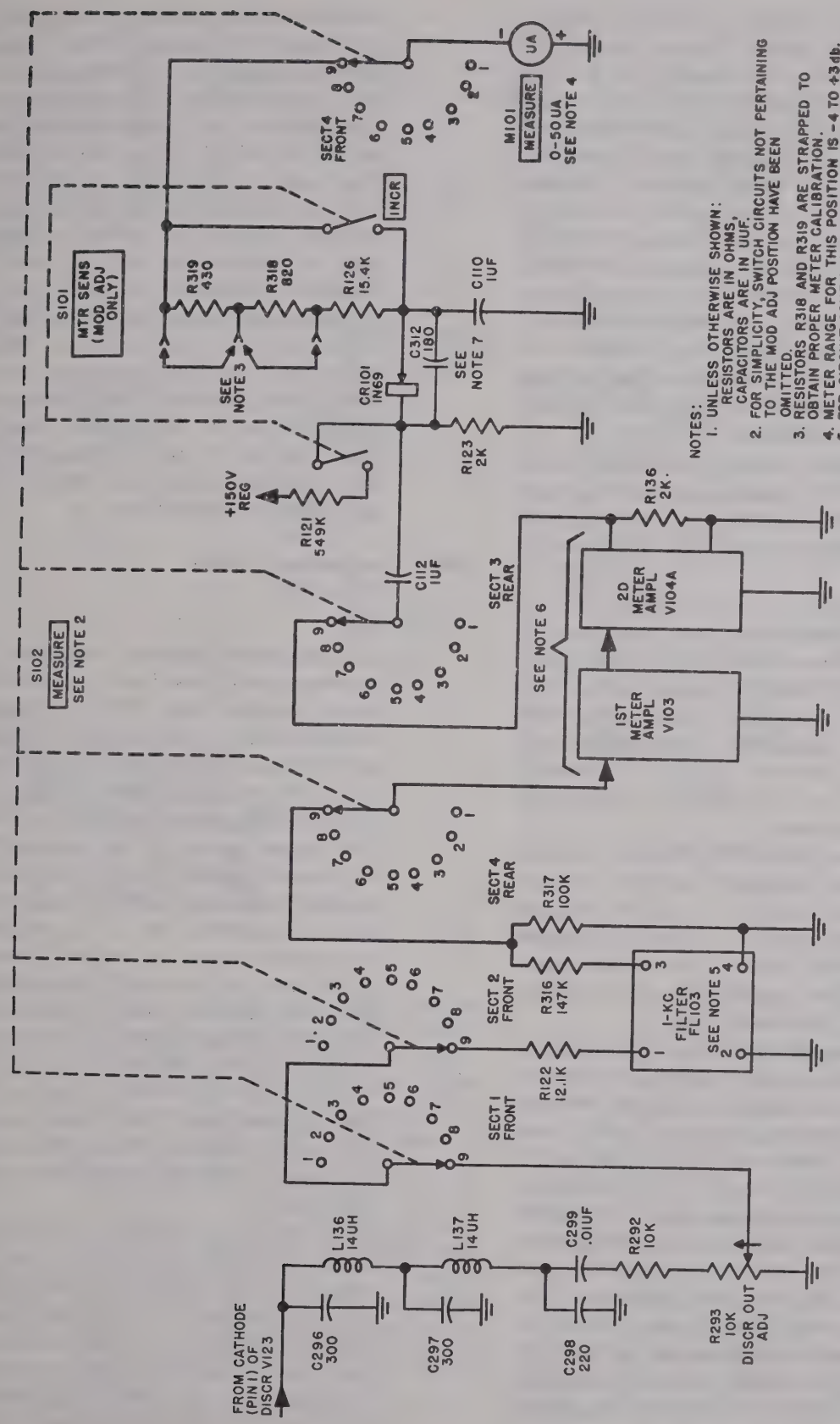

Figure 168. Transmitter MEASURE meter circuit, MOD ADJ position.

switch. Plate current flows through winding 3–4 of transformer T102. The a-c component of plate current then is bypassed to ground through capacitors C119 and C121. The dc component flows through resistor R140, the closed contacts of section 2 rear of the MEASURE switch, and is filtered by capacitor C114B and resistor R314. The voltage with respect to ground at terminal 5 of transformer T102 is 180° out of phase with the voltage at terminal 3. The voltage at terminal 5 is applied to the grid through capacitor C116, which with resistor R138, provides grid-leak bias. Cathode resistor R137 provides a bias voltage that reduces the amount of positive feedback and controls the amplitude of oscillations.

b. The 1-kc output is induced in winding 1–2 of transformer T102 and is applied through filter FL104, which removes any harmonics of 1 kc from the output, to the 1KC ADJ potentiometer, R141.

(1) The voltage at the movable arm of potentiometer R141 is applied through attenuating resistor R322 to the transmitter MEASURE meter when the MEASURE switch is in the 1KC ADJ position (par. 242). This permits adjustment of the 1KC ADJ potentiometer to provide the 1-kc output at a reference level.

(2) When the MEASURE switch is in the MTR CAL position (par. 242), the adjusted 1-kc output is applied through the meter amplifier to the transmitter MEASURE meter. This permits adjusting the overall gain of the meter amplifier for calibration.

(3) When the MEASURE switch is in the MOD ADJ position (par. 242), the adjusted 1-kc output is applied through the attenuator network, which consists of resistors R313, R128, R321, and R320 to the MOD ADJ potentiometer. The output from the MOD ADJ potentiometer passes through the transmitter base-band amplifiers and then in the reactance modulator, frequency modulates the base rf oscillator. The fm output passes through the two buffer amplifiers and is applied to the afc mixer. There the fm signal beats with an output of the pulsed oscillator and produces a frequency-modulated if. signal, which passes through the afc if. amplifiers, limiters, and discriminator. The discriminator demodulates the if. signal producing, as its ac output, a 1-kc signal. This 1-kc signal is selected by the 1-kc filter in the MEASURE meter circuit, passes through the meter amplifier, and is applied to the MEASURE meter to provide an indication of the modulation produced by the adjusted output of the 1-kc oscillator. Thus, when the MEASURE switch is in the MOD ADJ position, the adjustments which affect the transmitter modulation level can be made. These include the adjustments of the MOD TRIM and MOD ADJ controls.

244. Low-power Alarm
(fig. 268)

a. General.

(1) The negative dc output voltage of the forward-power section of the directional coupler (par. 226) is roughly proportional to the output rf power of the transmitter. This output voltage is filtered and applied to the grid of the first alarm amplifier. When the output power of the transmitter is normal, approximately —.8 volt is applied to the grid, and the plate current is relatively low. The resulting high plate voltage is coupled directly to the grid of the second alarm amplifier and produces heavy conduction. The heavy tube current of the second alarm amplifier flows through the winding of relay K101; and, under normal conditions, is sufficient to keep the relay operated. Figure 268 shows the relay in the alarm condition (de-energized).

(2) With the relay operated, the circuit to the ALARM lamp is open and the circuit to the buzzer is open if the ALARM switch is in the NOR position. When the rf output power of the transmitter decreases, the negative output of the forward-power section decreases, the tube current in the

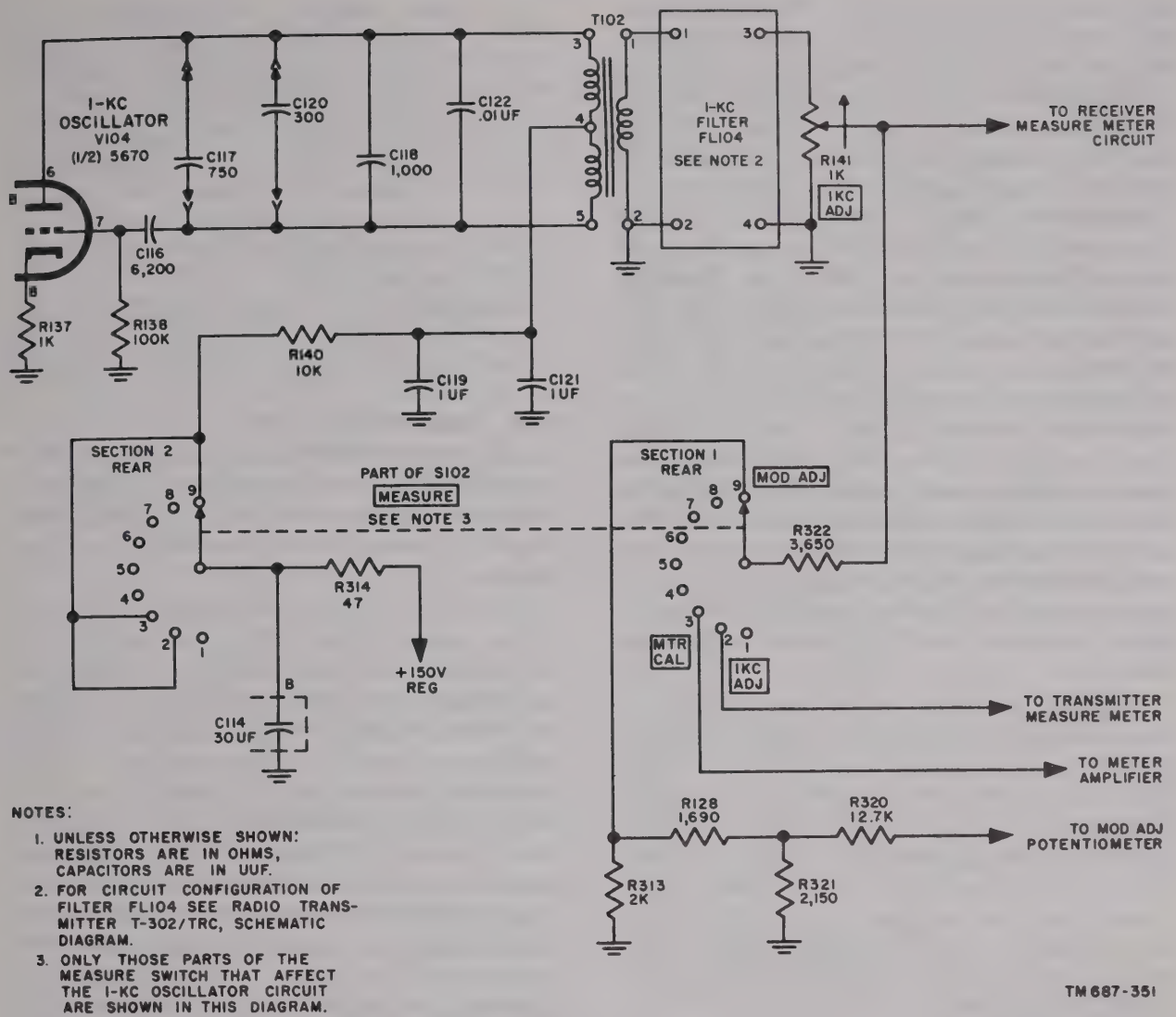

Figure 169. Oscillator, 1-kc.

alarm amplifier increases, the voltage at the grid of the second alarm amplifier decreases, and the cathode current through the winding decreases. When the transmitter output decreases to too low a value, the relay releases, thereby connecting 6.3 volts ac to the LOW PWR ALARM lamp and through the ALARM switch in the NOR position to the buzzer. When these visual and audible indications of low-power output are obtained, the attendant operates the ALARM switch to the REV position thereby silencing the buzzer.

(3) When the cause of the low-power output is corrected, the negative output of the directional coupler increases, the current in the first alarm amplifier decreases, the current in the second alarm amplifier increases, and relay K101 becomes operated. The circuit to the LOW PWR ALARM lamp is opened and the circuit to the buzzer is completed through the ALARM switch in the REV position. The sounding of the buzzer now indicates restoration to normal operation.

b. First Alarm Amplifier. The negative output of the forward-power section of the directional coupler is applied to connector P111. This voltage is filtered by capacitors C186 and C185

and resistors R194 and R179. The filtered voltage is applied to the grid of first alarm amplifier tube V111. A positive bias voltage is applied to the cathode of the first alarm amplifier from THRESHOLD ADJ rheostat R191, which is part of a voltage divider connected between +150 volts and ground. This voltage divider consists of resistors R180 and R181. Adjustment of the THRESHOLD ADJ control varies the positive bias on the cathode and, therefore, determines to what level the output power must fall before the alarm relay releases and alarm indications are obtained. Resistor R187 is the plate load resistor and is connected to the unregulated +250-volt output of the low-voltage power supply. Screen-grid voltage is obtained from the junction of resistors R180 and R181. A voltage divider consisting of resistors R182 and R184 is connected between the junction of resistors R194 and R179 to supply a portion of the partially filtered output of the forward-power section to the TEST meter circuit (par. 245).

c. Second Alarm Amplifier. The dc voltage at the plate of the first alarm amplifier is applied through current-limiting resistor R186 to the grid of tube V112, the second alarm amplifier. The plate is connected directly to +150 volts and tube V112 operates as a cathode follower. The winding of relay K101 is connected between ground and the cathode of tube V112. The tube current, which flows through the winding of relay K101, normally is sufficient to keep the relay operated.

d. Relay Circuit.

(1) When the ALARM switch is in the NOR position, buzzer I 102, and LOW PWR ALARM lamp I 101, are connected in parallel. One side of the parallel combination is connected to the 6.3-volt ac heater supply; the other side is connected to contact 1 of relay K101. Contact is made between contacts 1 and 2 when the relay releases (alarm condition) and thereby connects the other side of the parallel combination to ground. This completes the circuit and the LOW PWR ALARM lamp lights and the buzzer sounds.

(2) When the ALARM switch is in the REV position, one side of the buzzer and one side of the LOW PWR ALARM lamp are connected to 6.3 volts ac. The connection of the other side of the LOW PWR ALARM lamp is unaffected by the ALARM switch. The other side of the buzzer, however, is connected through the ALARM switch to contact 3 of relay K101 and is connected to ground when the relay is operated.

(3) When the ALARM switch is in the OFF position, the buzzer circuit is open in either condition of the relay.

245. TEST Meter Circuit

a. General. TEST meter M102, with TEST switch S104, is used to measure rf currents in a number of rf stages of the transmitter. This circuit also measures the forward and reflected power.

b. Position 1, OSC MOD PLATE (fig. 170). In this position, the TEST meter will indicate the sum of the plate currents of reactance modulators V105 and V106 and base rf oscillator V107. A voltage drop across resistor R190, proportional to the plate currents flowing through it, is used to meter these stages. Full-scale deflection would correspond to 50 ma of plate currents. Normal operation produces approximately 14-μa deflection, which corresponds to 14 milliamperes (ma) of plate current.

c. Position 2, DRIVER GRID (fig. 170). With the TEST switch in this position, the TEST meter indicates the driver grid current. The dc grid return path is through metering resistor R172. A voltage drop across this resistor, which is proportional to the grid current flowing through it, is indicated by the meter. Capacitor C172 is an rf bypass for the metering circuit. Full-scale deflection would correspond to about 5 ma of grid current. Normal operation produces a reading between 10 and 45 μa, which corresponds to grid current of 1 to 4.5 ma.

d. Position 3, DRIVER CATH (fig. 170). In this position, the TEST meter will respond to adjustments of the DRIVER TUNE control. A dip in the meter reading will occur when the circuit is properly tuned. The dc cathode return path is through resistor R175 which provides cathode bias for this stage. This bias voltage is applied to a voltage divider consist-

ing of resistors R177 and R176. The voltage drop across resistor R176 is used to meter the cathode current. Full-scale deflection corresponds to 250 ma. For normal operation of this stage, the reading is about 20 to 30 μa, and this corresponds to 100 to 150 ma of cathode current.

e. Position 4, MULT GRID. The dc return path for the grid of multiplier V1 is through grid-leak resistor R7 and metering resistor R10 (fig. 148). The potential developed across resistor R10 is used to meter the grid current. An increase in grid drive is indicated by an increased deflection on the TEST meter. This indication may be used while tuning the driver and multiplier grid circuits. Full-scale deflection of the TEST meter corresponds to 10 ma of the multiplier grid current. For normal operation of this stage, the meter indicates about 30 μa, which corresponds to 6 ma of grid current.

f. Position 5, MULT CATH (fig. 148). Resistors R18 and R20 provide for metering the cathode current. Full-scale deflection of the TEST meter represents 500 ma of multiplier cathode current. Normal operation of this stage results in 11 to 14 μa deflection; that is, 110 to 140 ma of cathode current.

g. Position 6, PWR AMPL GRID (fig. 146, 149, and 170). Resistors R13 and R14 provide the dc return path for the power-amplifier grid circuit of the C-band rf tuner. The potential developed across resistor R14 is used for grid-current metering. In the B-band tuner, the dc voltage developed across resistor R9 is used for metering the grid current of the power amplifier. This meter indication may be used for tuning the multiplier plate circuit of the C-band tuner, and the power-amplifier grid circuit of either rf tuner. Full-scale deflection of the meter corresponds to a grid current of 15 ma. A 30-μa reading is normal for this circuit; that is, about 9 ma of grid current.

h. Position 7, PWR AMPL CATH (fig. 146, 149, and 170). Resistors R16 and R17 in the C-band rf tuner and resistors R5 and R7 in the B-band rf tuner provide for metering the cathode current of the respective power amplifier. Full-scale deflection of the meter represents 500 ma of cathode current. Normal operation results in 20 to 25 μa deflection; that is, 200 to 250 ma of cathode current.

i. Position 8, FWD PWR (fig. 170). The forward-power section of the directional coupler provides a rectified current that is roughly proportional to the forward power (the power transmitted toward the antenna (par. 226)). The rectified current flows through resistors R182 and R184. The voltage drop across resistor R184 is applied to the metering circuit to provide an indication of the forward power. Full-scale deflection would correspond to a rectified current of approximately 200 microamperes. A TEST meter reading of at least 30 μa, or about 120 microamperes of rectified current, indicates normal forward power.

j. Position 9, REFL PWR. The reflected-power section of the directional coupler provides a rectified current that is roughly proportional to the rf power that is reflected because of antenna or transmission line mismatch (par. 226). The rectified current flows through resistors R184 and R185. The voltage drop across resistor R185 is applied to the TEST meter to provide an indication of the reflected power. Full-scale deflection would correspond to a rectified current of approximately 200 microamperes. A TEST meter reading of not more than 10 μa, or about 40 microamperes of rectified current, indicates that the reflected power is not excessive.

246. Switch Box SA–331/U
(fig. 272)

a. Switch Box SA–331/U permits the radio-set attendant to transfer from one source of ac power to another without interrupting operation of the radio set. Two sources of power are connected to INPUT NO. 1 and INPUT NO. 2 connectors on the switch box. When POWER SUPPLY switch S1 is in the NO. 1 position, a connection is made between the INPUT NO. 1 and OUTPUT connectors. When the power source that is connected to the INPUT NO. 1 connector requires maintenance, such as refueling, the other power source is started and switch S1 is operated to the NO. 2 position. Switch S1 is a quick-acting switch and operation of the switch does not interrupt operation of the radio set. A similar procedure is followed when the power source connected to the INPUT NO. 2 connector requires maintenance.

b. Both power sources that are connected to the switch box must supply the *same* ac output

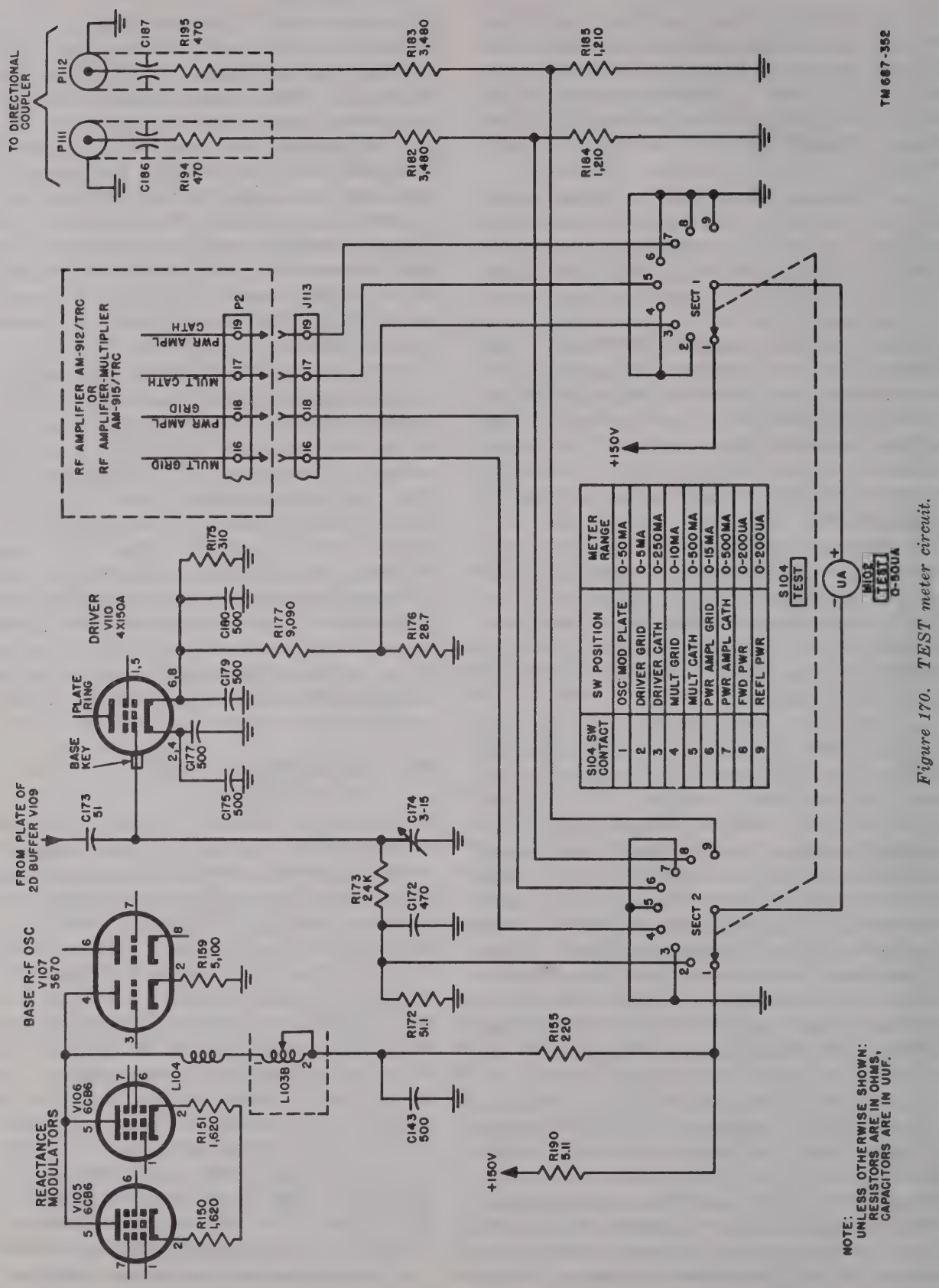

Figure 170. TEST meter circuit.

voltage, which may be either 115 volts or 230 volts, 60 cycles per second. When both power sources have the same output voltage, the operation of switch S1 will not result in the application of 230 volts to a circuit that is adjusted to operate from 115 volts.

247. Interconnecting Box J–532/U (fig. 273)

The output from Switch Box SA–331/U is connected to AC INPUT 115/230V connector J1 of Interconnecting Box J–532/U. The interconnecting box provides six OUTPUT connectors to supply power to Radio Set AN/TRC–24 and to as many as five other equipments which are located at the same site. A bus bar link in the interconnecting box is connected differently for 115 volts and 230 volts to connect the input from terminal E of connector J1 to the appropriate terminal of the OUTPUT connectors.

a. For a 115-volt input, the bus bar link is connected to both the 115-volt bus bar and to the convenience outlet 115-volt terminal. Thus, the 115-volt input from terminal E of connector J1 is applied to terminal Y of each of the output connectors and through fuse F1 or F2 to one side of each of the convenience outlets. The other side of each of the convenience outlets and terminal X of each of the OUTPUT connectors are connected to the common bus bar and from there to terminal B of connector J1. No voltage is applied to terminal Z of any of the OUTPUT connectors when a 115-volt input is used.

b. For a 230-volt input, the bus bar link is connected only to the 230-volt bus bar. This connection applies 230 volts to terminal Z of each of the OUTPUT connectors. No voltage is applied to terminal Y of any of the OUTPUT connectors and no voltage exists across any of the convenience outlets when a 230-volt input is used.

248. Autotransformer Fixed Power Transformer TF–167/TRC (fig. 274)

All primary power for Radio Set AN/TRC–24 is supplied through Autotransformer Fixed Power Transformer TF-167/TRC. With a nominal input of either 115 or 230 volts ac, the autotransformer supplies 115 $\pm 5\frac{1}{2}$ volts ac to the radio receiver, to Power Supply PP–685/TRC, and to a convenience outlet.

a. 115-volt Ac Input. The ac input to the autotransformer is obtained from the interconnecting box. An input of 115 volts is applied from terminals Y and X of AC INPUT 115–230V connector J1 through 115V 20 AMP fuse F1 and COM 20 AMP fuse F3 terminals 4 and 1 of autotransformer T1. The output connection from autotransformer T1 is determined by the position of INCR OUT switch S1. With the switch in position 1 or 2, the autotransformer steps down the input voltage. With the switch in position 4, 5, or 6, the autotransformer steps up the input voltage. There is a 1–to–1 voltage ratio when the INCR OUT switch is in position 3. Switch S1 permits selection of a position that provides an output of 115 $\pm 5\frac{1}{2}$ volts for an input voltage between 95 and 130 volts.

b. 230-volt Ac Input. An input of 230 volts is applied from terminals Z and X of AC INPUT 115–230V connector J1 through 230V 10 AMP fuse F2 and COM 20 AMP fuse F3 to terminals 8 and 1 of autotransformer T1. Terminals 2 through 7 are stepdown taps, which connect to the INCR OUT switch. Switch positions 1 through 6 permit the selection of a tap that will deliver 115 $\pm 5\frac{1}{2}$ volts for an input voltage between 190 and 260 volts.

c. 115-volt Ac Output. The 115-volt ac output between the movable contact of switch S1 and terminal 1 of autotransformer T1 is applied to terminals Y and X of both the REC and XMTR outlets and through CONV OUT 5 AMP fuse F4 to the convenience outlet. From the REC connector, the 115-volt output is applied to the power supply in the radio receiver. The 115-volt output from the XMTR connector is applied to Power Supply PP–685/TRC. For protection to personnel and equipment, the autotransformer case and connectors J1, J3, and J4 are grounded to earth through the GND binding post.

249. Power Supply PP–685/TRC (fig. 275)

a. General. Power Supply PP–685/TRC supplies all the dc and ac voltages required for the operation of the transmitter circuits and —12 volts dc for the receiver, order-wire, and signaling circuits. A brief description of Power Supply PP–685/TRC is contained in paragraph 213.

b. Input Circuit.

(1) Power Supply PP–685/TRC will op-

erate satisfactorily directly from a power source the voltage of which is between 103.5 and 126.5 volts, 50 to 60 cycles. An power-cable adapter contained in the power supply (fig. 13) permits connecting the power cable to a standard single-phase ac power outlet.

(2) Normally, the power for the power-supply unit is obtained from the autotransformer. The autotransformer output is applied to connector J1. Circuit CB1 provides overcurrent protection and is used as the main power switch. When this circuit breaker, 115V AC, is operated to the ON position, the input voltage is applied directly to the AC VOLTS meter, through fuses F1, F2, and F5 to three filament transformers, through BLO 3A fuse F4 to the blower motor in the radio transmitter, and through thermostat S1 and connectors J2 and P1 to the blower motor in the power-supply unit.

c. AC VOLTS Meter. Meter M1 indicates the applied ac voltage and permits adjustment of the autotransformer output (par. 248) to 115 $\pm 5\frac{1}{2}$ volts.

d. Filament Circuits.

(1) The input ac voltage from the closed contacts of the 115V AC circuit breaker is applied through HV FIL 1A fuse F1 to primary winding 1–2 of the high-voltage filament transformer, T2. Secondary winding 3–5 provides filament voltage for the high-voltage rectifier tubes. Secondary winding 6–7 provides filament voltage for the high-voltage regulator and dc amplifier tubes.

(2) The input ac voltage is applied through LV FIL 1.5A fuse F2 to primary winding 1–2 of transformer T3. Winding 5–6 of transformer T3 supplies the filament voltage for the low-voltage rectifier tubes. Winding 3–4 supplies the filament voltage for the low-voltage regulator and dc amplifier tubes, and the current to the heating element of thermal relay K3. Winding 7–8 supplies the ac voltage to full-wave bridge rectifier CR1.

(3) The input ac voltage is applied through FIL 1.5A fuse F5 to primary winding 1–2 of transformer T5. Secondary windings 5–6 and 3–4 provide filament voltages for tubes in the radio transmitter. FIL lamp I 3 is connected to terminals 3A and 4A and lights when power is applied to transformer T5.

e. Blower Motors.

(1) *Power-supply blower motor.* When the surrounding temperature in the power supply exceeds approximately 80° F., thermostat S1 closes and the input ac voltage is applied through connectors J2 and P1 to blower motor B1. Capacitor C1 shifts the phase of the voltage applied to the shunt field of the motor.

(2) *Transmitter blower motor.* The input ac voltage is applied through BLO 3A fuse F4 of the power supply to blower motor B102 (fig. 268) in the radio transmitter. Capacitors C307 and C308 compensate for the lagging power factor of the motor. The 115 volts fed to the transmitter through fuse F4 is applied also to one phase of the afc motor (par. 207) and to filament transformer T103 (par. 216).

f. Full-wave Bridge Rectifier. Full-wave bridge rectifier CR1 consists of selenium disks, which rectify the ac from winding 7–8 of transformer T3. The output of rectifier CR1 is filtered by the two sections of capacitor C6. The —12-volt unregulated output energizes the interlock circuit in the power supply and radio transmitter, provides operating power for the control relays in the power supply, and also provides bias voltages for the receiver, orderwire, and signaling circuits.

250. Power Supply PP–685/TRC, Control Circuit

(fig. 171)

a. General. The 12-volt output from rectifier CR1 is applied through the normally closed interlock circuit (*b* below), through the normally closed contacts of high-voltage overload relay K4, and through the contacts of thermal relay K3. The contacts of the thermal relay close approximately 50 seconds after input voltage is applied to Power Supply PP–685/TRC and permit current to flow through the winding

of relay K2. Relay K2 operates and connects the winding of relay K1 across the 12-volt output. Relay K1 operates and completes the input circuit to the high-voltage power supply (fig. 275).

b. Interlock Circuit. Six interlock points (fig. 171) in Radio Set AN/TRC–24 remove high voltage from the radio transmitter and power supply when the high-voltage circuit is exposed. If the interlock circuit is broken at any point, relay K2 will release causing relay K1 to disconnect input power from the high-voltage power supply. The six interlock points are described in (1) through (6) below.

(1) If the transmitter tuner is not plugged into the radio transmitter, the circuit between terminals 7 and 6 of connector J113 will be open.

(2) Transmitter interlock switch S110 will open if the radio transmitter is not completely within its transit case.

(3) Interlock switch S111 will open if the antenna filter (band-pass filter or dummy filter) is not locked in place in the radio transmitter.

(4) Centrifugal switch S112 is located inside the transmitter blower motor housing and will open if the blower motor or its 115-volt ac input should fail.

(5) If the interconnecting cable between the power supply and the radio transmitter is loose or disconnected, the interlock circuit will open.

(6) If the power supply is not completely within its transit case, interlock switch S4 will open.

c. High-voltage Overload Relay. Relay k4 is connected in the negative return of the high-voltage power supply. When an overload exists in the high-voltage circuit, relay K4 operates, thereby opening the circuit to relay K2. Relay K1 releases and opens the input circuit to the high-voltage power supply. This is indicated by the distinguishing of 750V DC lamp I 1 (fig. 275). Variable resistor R1 (fig. 171) shunts the winding of relay K4. The adjustment of resistor R1 determines the proportion of the total high-voltage current that flows through relay K4. Resistor R1 is adjusted so that the relay operates when the total current in the high-voltage power supply reaches .5 ampere. When relay K4 operates, input voltage and, therefore, the overload current are removed from the high-voltage power supply. For power supplies bearing serial numbers 1 through 58 on Order No. 16811–Phila–51 that do not contain resistor R33, removal of the overload causes the relay to release to complete the interlock circuit. If the overload persists, the relay will operate and release continuously and the 750V DC lamp will cycle on and off to indicate the presence of an overload. Power supplies on the above order number bearing serial numbers 59 and above, and also those on Order No. 32146–Phila–51, contain resistor R33. This resistor prevents the relay from releasing shortly after it has been operated by the overload current. Terminal 8 of the relay winding is connected through resistor R33 to —12 volts. Thus, after relay K4 operates, it is held in the operated condition until the 115V AC switch is thrown to OFF. This removes the —12 volts and relay K4 releases. After the 115V AC switch is returned to the ON position, only an overload in the high-voltage power supply can cause relay K4 to operate.

d. Thermal Relay. The high-voltage rectifier tubes require a minimum of 30 seconds of filament heating prior to the application of plate voltage. When power is applied to the power supply initially, the bimetallic strip is cold and no connection exists between terminals 5 and 7 of relay K3. Therefore, relays K2 and K1 are in the released condition. Approximately 6.3 volts ac is applied from winding 3–4 of transformer T3 through closed contacts 9 and 1 of relay K2 to the heating element of relay K3. After approximately 50 seconds, the bimetallic strip has been sufficiently heated to close the circuit to relay K2. Relay K2 operates.

e. Relay K2. When relay K2 operates, contacts 5 and 11 close, thereby connecting the winding of relay K1 across the 12-volt supply. Contacts 10 and 4 close and provide a shunt path around the bimetallic strip of relay K3. Contacts 9 and 1 of relay K2 are disconnected, thereby unshorting current-limiting resistor R14 and reducing the current flowing through the heating element of the thermal relay. Although the bimetallic strip is bypassed through contacts 10 and 4 of relay K2, current remains applied to the heating element so that a momentary interruption of power will not cause

a 50-second interruption of operation. Because of the reduced heating current, power can be interrupted for 1 second before relay K3 will open.

251. High-voltage Power Supply (fig. 172)

a. Input Circuit. When 750V DC circuit breaker CB2 is operated to the ON position, the 115-volt ac input is applied through the closed contacts of relay K1 (par. 250) and the closed contacts of circuit breaker CB2, through the 750V ADJ switch to the primary winding of transformer T1. The 750V DC lamp, I 1, is connected across terminals 2 and 3 of transformer T1. The lamp obtains ac voltage by autotransformer action and lights when power is applied to transformer T1. The 750V ADJ switch, S2 permits selecting taps on the primary winding, thereby controlling the effective turns ratio of transformer T1. Operation of the switch adjusts the +750-volt output of the high-voltage power supply from 300 to 900 volts.

b. +750-volt Circuit. Center-tapped secondary winding 8–9–10 of transformer T1 and high-voltage rectifier tubes V1 and V2 are connected in a conventional full-wave rectifier circuit. The rectified output is filtered by swinging filter choke L1 and capacitors C2, C3, and C5. Capacitor C5 provides a low impedance to high frequencies of 50 kc or higher which may appear across the high-voltage output. Resistors R2, R3, and R4 comprise a voltage divider across the high-voltage output to provide a safe voltage for measurement on the DC VOLTS meter in the 750 LOWER SCALE position of the DC TEST switch. Resistors R5, R6, and R7 form a bleeder that provides a discharge path for the filter capacitors upon removal of the external load.

c. Regulated-voltage Circuit. The +275-volt regulated output is obtained from the +750-volt rectifier and filter circuit through high-voltage regulator tube V3. Slight variations in the output voltage produce opposite variations in the grid voltage applied to tube V3. The plate resistance of tube V3 will vary, according to the grid voltage, to compensate for changes in the output voltage coused by load variations.

(1) The voltage divider, consisting of resistors R5, R6, and R7, in addition to serving as the minimum load for the +750-volt rectifier, provides the correct plate and cathode voltage for tube V4 and the correct screen-grid voltage for tube V3. Capacitor C4A reduces the ripple voltage across resistor R7. Resistor R8 limits the screen current of tube V3. Resistor R10 limits the screen current of tube V4. A voltage divider in the transmitter tuner consists of fixed resistors R1 and R3 and SCREEN VOLTS ADJ potentiometer R2. The adjustable contact of potentiometer R2 is connected to the control grid of tube V4. Capacitor C16 and resistor R34 (fig. 172) have been included in power supplies bearing serial numbers 701 and above on Order No. 16811–Phila–51. These items are also included in power supplies bearing serial numbers 1 through 1847 on Order No. 32146–Phila–51. The capacitor eliminates wide-band noise generated by tube V4. The resistor prevents possible parasitic oscillations of about 75 mc. The addition of the capacitor and resistor were necessary to permit the use of the A-band tuner (not available at present).

(2) If the output voltage increases due to a decrease in load, the grid voltage of tube V4 increases proportionately. The increased grid voltage causes increased current in tube V4 and an increased voltage drop across plate-load resistor R9. Therefore, the grid voltage applied to the grid of tube V3 decreases, the dc resistance of tube V3 increases and the output voltage is returned very nearly to its normal value. The adjustment of SCREEN VOLTS ADJ potentiometer R2 determines the grid voltage of tube V4 and, therefore, the output voltage. By the adjustment of the potentiometer, the regulated output voltage can be varied from +200 to +350 volts.

3) Variations in the unregulated +750-volt output voltage will cause the cathode voltage and the grid voltage

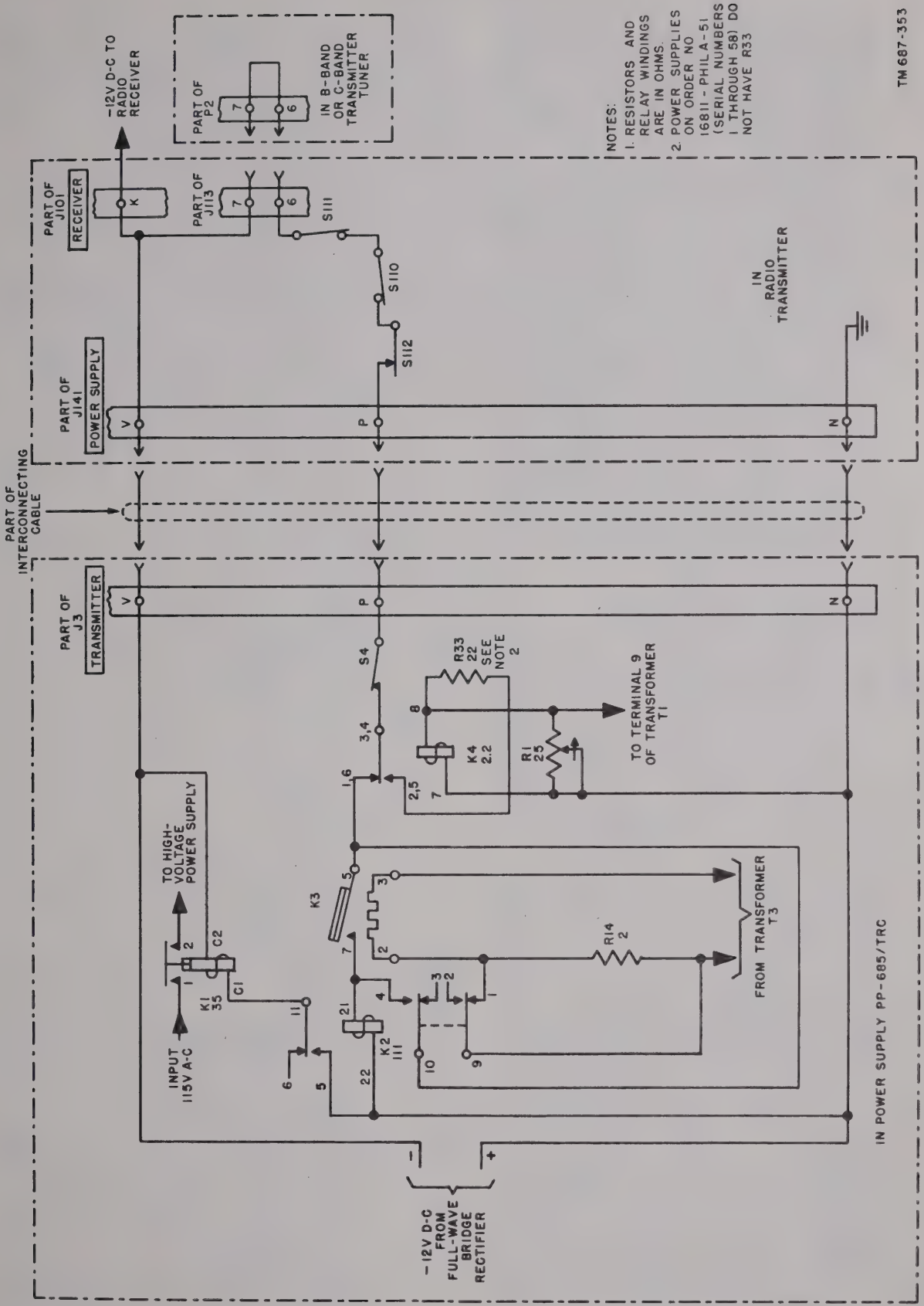

Figure 171. Control circuit.

of the tube V4 to vary accordingly. This causes the regulated ouput that is applied to the screens of the transmitting tubes to follow the variations in the unregulated output; this is applied to the plates of the transmitting tubes.

(4) A voltage divider consisting of resistors R11 and R12 applies approximately two-thirds of the regulated dc voltage to the filaments of tubes V3 and V4. This dc voltage reduces the filament-to-cathode potential in these tubes, thereby preventing a voltage breakdown. Capacitor C4B is the regulated output filter capacitor, which provides a low impedance to any high-frequency voltages appearing in the output. The output voltage is applied through multiplier resistor R13 to the DC VOLTS meter when DC TEST switch S3 is in the 275 LOWER SCALE position.

252. Low-voltage Power Supply

a. Input Circuit. When 150V DC circuit breaker CB3 (fig. 275) is operated to the ON position, the 115-volt ac input is applied from the closed contacts of circuit breaker CB1 across winding 1–3 of transformer T4. The 150V DC lamp, I 2, is connected between terminals 1 and 2 of transformer T4. The lamp obtains ac voltage by autotransformer action and lights when power is applied to transformer T4.

b. +250-volt Circuit. Center-tapped secondary winding 4–5–6 of transformer T4 and low-voltage rectifier tubes V5 and V6 are connected in a full-wave rectifier circuit. Tubes V5 and V6 are connected in parallel. The rectified output is filtered by capacitors C7, C8, C9, and C14, and resistor R31. The negative return to the center tap, terminal 5, of transformer T4 is used at .5 ampere by 150V DC fuse F3. The negative side of the low-voltage (+250-volt) power supply is grounded in the radio transmitter.

c. +150-volt Circuit (fig. 173). The +150-volt regulated output is obtained from the low-voltage rectifier output through the parallel combination of low-voltage regulator tubes V7 and V8. Slight variations in the +150-volt output are amplified by low-voltage dc amplifier tube V9, which applies opposite voltage variations to the grids of the low-voltage regulator tubes. Thus, the resistance of the regulator tubes is varied to compensate for output-voltage changes which may be caused by load or line-voltage variations.

(1) *Low-voltage dc amplifier circuit.*

(*a*) A change in current through the series circuit of tube V10 and resistor R32 caused by a change in the regulated output voltage produces a voltage drop across resistor R32. Almost no change occurs across tube V10 because of the inherent regulating characteristics of the tube. Thus, the full change in output voltage is developed across resistor R32. Capacitor C15 prevents oscillations in the voltage-regulator tube and thus prevents voltage variations.

(*b*) If the output voltage increases, the full increase as developed across resistor R32 is applied to the cathode of tube V9A. A portion of the increased output voltage is applied to the grid of tube V9A from the voltage divider consisting of resistors R28 and R30 and potentiometer R15. The grid-to-cathode voltage of tube V9A decreases, the current decreases, and the drop across plate load resistor R26 decreases. Therefore, the plate voltage increases. Capacitor C12 tends to hold the voltage at the grid of tube V9A constant and makes the input circuit to tube V9A more sensitive to rapid changes in the output voltage than to gradual changes. The adjustment of 150V ADJ potentiometer R15 determines the normal grid voltage for tube V9A and, therefore, the normal value of plate voltage.

(*c*) The amplified increase in voltage appearing at the plate of tube V9A is directly coupled to the grid of tube V9B. Cathode voltage for tube V9B is obtained from the voltage divider, consisting of resistors R27 and R29, which is connected across tube V10. The voltage drop

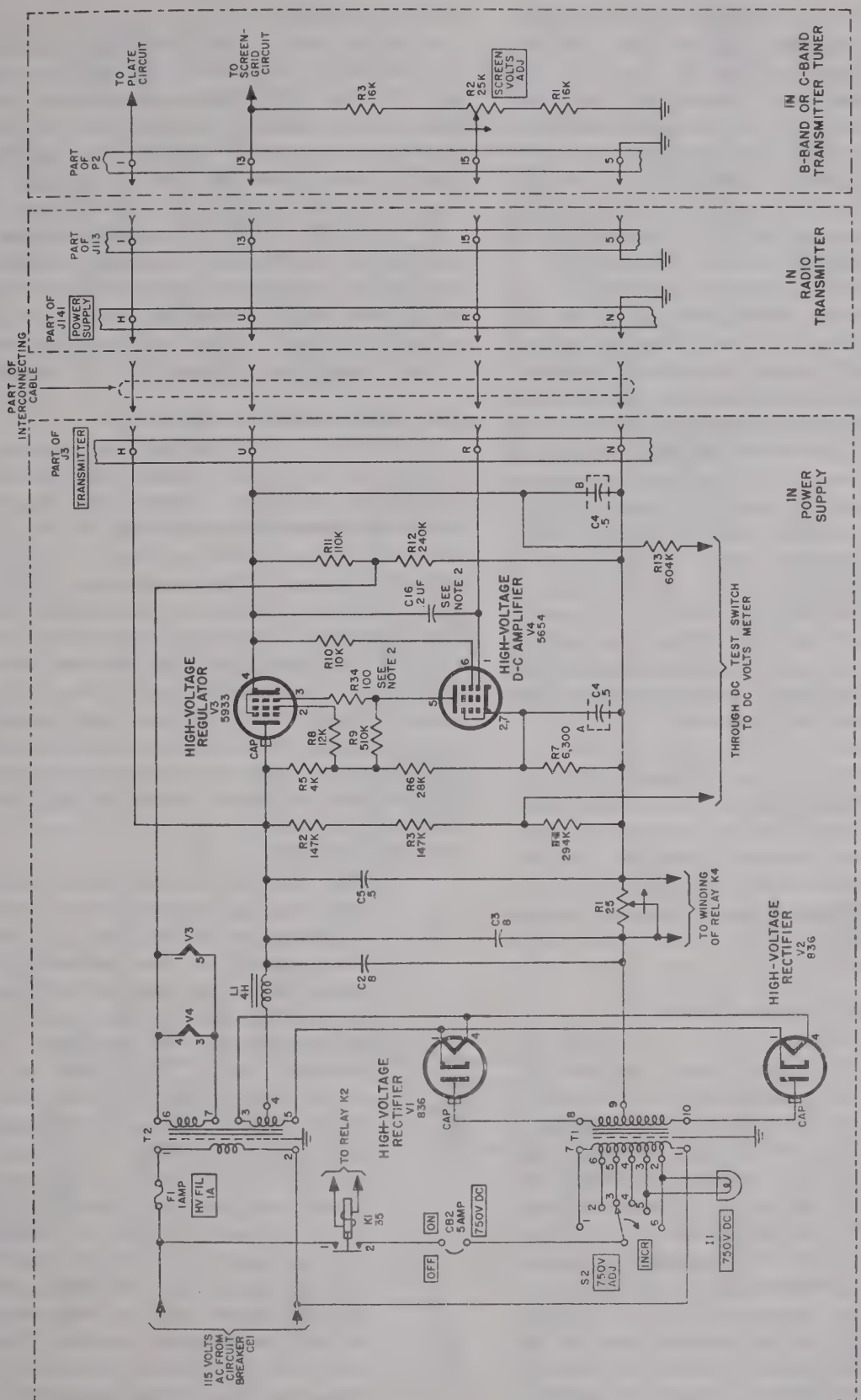

NOTES

1 UNLESS OTHERWISE SHOWN, RELAY WINDINGS ARE IN OHMS, CAPACITORS ARE IN UF.

2 C16 AND R34 USED ON ORDER NO 16811-PHILA-51 (SERIAL NUMBERS 701 AND ABOVE) AND ON ORDER NO 32146-PHILA-51

Figure 172. High-voltage power supply.

across resistor R27 is held constant by capacitor C10. The grid-to-cathode voltage of tube V9B increases and causes an increased voltage drop across plate load resistor R24. The decreased voltage at the plate of tube V9B is the output of the dc amplifier. Resistor R25 and capacitor C11 prevent parasitic oscillations at high frequencies.

(2) *Low-voltage regulator circuit.* The decreased output voltage from the low-voltage dc amplifier is applied through parasitic-suppressor resistors R16, R19, R20, and R23 to the grids of low-voltage regulator tubes V7 and V8. This causes the dc resistance of the tubes to increase and the voltage drop across them to increase, thereby restoring the regulated output voltage to its normal value. Cathode resistors R17, R18, R21, and R22 tend to maintain an equal division of current through the four triode sections of tubes V7 and V8 by increasing the cathode bias on the section that tends to draw more current.

(3) *Filament circuit.* The filaments of tubes V7, V8, and V9 obtain 6.3 volts ac from winding 3–4 of transformer T3. A positive dc voltage is applied to these filaments from the junction of resistors R27 and R29. The dc voltage keeps the filament-to-cathode potential in these tubes within safe limits.

253. DC VOLTS Meter Circuit (fig. 275)

The DC VOLTS meter circuit indicates the regulated and unregulated output voltages of the high-voltage power supply and the regulated output of the low-voltage power supply.

a. When DC TEST switch S3 is in the 150 UPPER SCALE position, the positive terminal of DC VOLTS meter M2 is connected directly to the +150-volt regulated output of the low-voltage power supply. In all positions of switch S3, the negative terminal of meter M2 is connected to the negative side of the low-voltage power supply, which is grounded in the radio transmitter. When the switch is in the 150 UPPER SCALE position, the upper scale of the meter is read.

b. When the DC TEST switch is in the 275 LOWER SCALE position, the positive terminal of meter M2 is connected through multiplier resistor R13 to the regulated output of the high-voltage power supply. In this switch position and in the 750 LOWER SCALE position, the lower scale of the meter is read.

c. When the DC TEST switch is in the 750 LOWER SCALE position, voltage is applied to the positive terminal of meter M2 from a voltage divider that is connected across the filtered output of the high-voltage rectifier. The voltage divider consists of resistors R2, R3, and R4.

254. Wattmeter ME–82/U

a. General. The transmitting antenna is not connected to the transmitter when the wattmeter is in use. When used, the wattmeter is connected to the output of the radio transmitter to provide an indication of the output rf power. The measurement of output power is used as a tuning or test indication.

b. Theory. The output power of the transmitter is coupled through the antenna cable to the input of the wattmeter. The rf signal passes through a coupling unit that is electrically identical with one-half of the directional coupler (par. 226) to a hermetically sealed 52-ohm resistor, which serves as the dummy load and provides a good termination for the transmission line.

(1) The coupling unit in the wattmeter consists of a transmission section and a forward-power section. The rectified output of the forward-power section is proportional to the rf power transmitted through the transmission section to the dummy load. This rectified output is applied to the microammeter on the front panel of the wattmeter. The microammeter is calibrated in watts. A correction chart is marked on the front panel to permit compensating for slight differences in readings due to frequency.

(2) The accuracy of the meter readings depends upon the positioning of the forward-power section with respect to the transmission section. Therefore, the positioning is factory adjusted and the forward-power section is sealed in the transmission section.

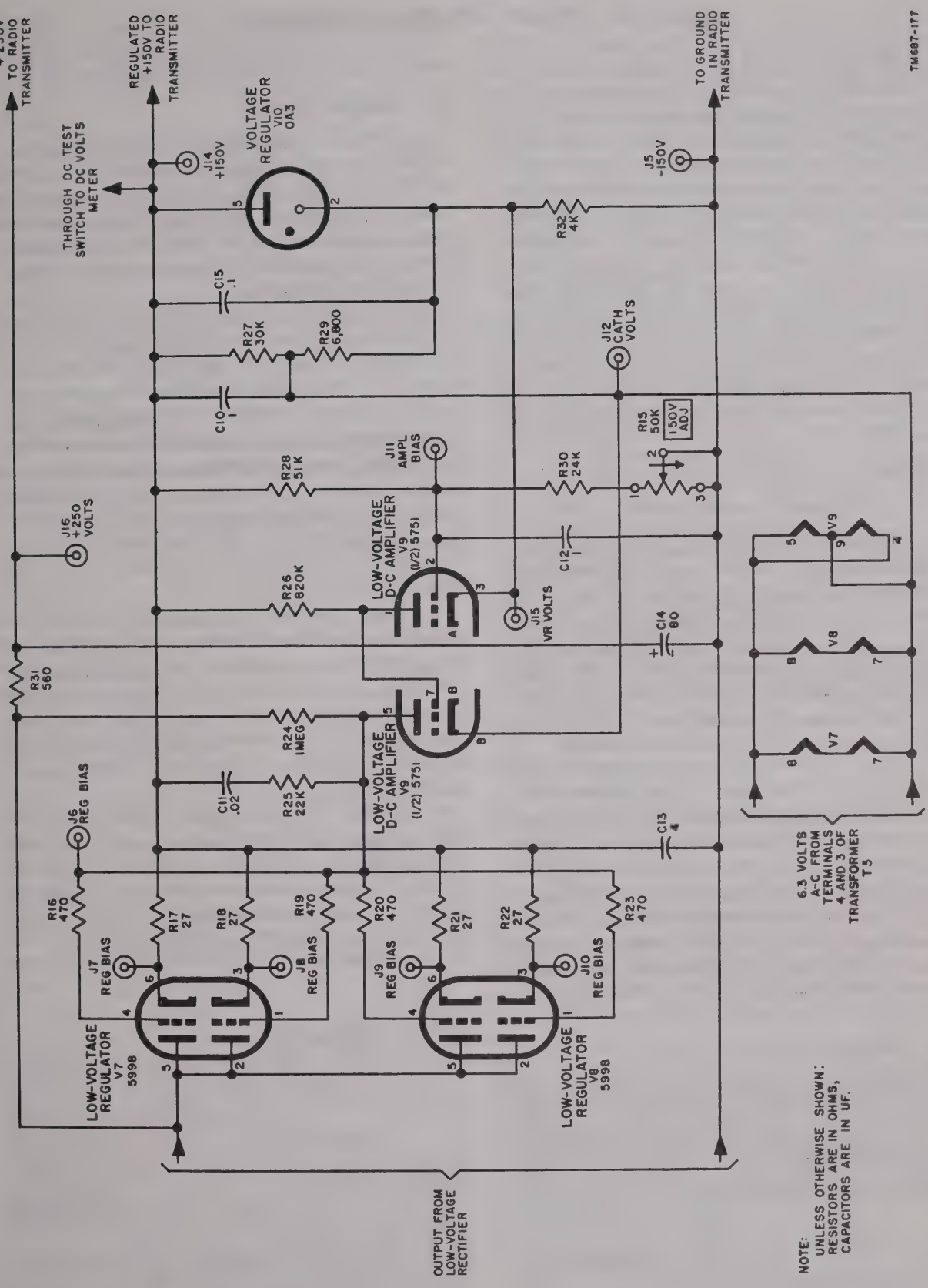

Figure 178. Low-voltage regulator circuit.

Section III. THEORY OF RECEIVER CIRCUITS

255. General

a. The receiver circuits described in this section are a functional grouping consisting of the following components of Radio Set AN/TRC–24: all of Radio Receiver R–417/TRC except the order-wire and signaling circuits (which are described in paragraphs 300 through 308), Amplifier-Converter AM–913/TRC or Amplifier-Converter AM–914/TRC, the dummy filter or one of the band-pass filters, and Antenna AS–639/TRC or AS–640/TRC. The block diagram of the receiver circuits is shown in figure 174. A discussion covering the block diagram of the receiver (fig. 174) is contained in paragraphs 256 through 270.

Figure 174. Receiver circuits, block diagram.

(Contained in separate envelope.)

b. Radio Receiver R–417/TRC is a single-conversion superheterodyne fm receiver with an intermediate frequency of 30 mc. The receiver is continuously tunable over the frequency range from 100 to 225 mc when equipped with the B-band rf tuner, and from 225 to 400 mc with the C-band rf tuner. Band-pass filters may be used, if desired, to improve the selectivity of the receiver. A calibrator, incorporated in the receiver, is used to check the calibration of the tuning dials. The receiver is also equipped with an afc system to maintain frequency stability, a squelch or automatic noise suppression circuit, a delayed automatic gain control (agc) circuit, and a measuring circuit to check circuit adjustments and to measure signal levels. A second meter is provided for tuning and as an indicator of frequency drift. The complete receiver schematic diagram is shown in figure 276.

256. Receiver Band-Pass Filter

The antenna is coupled to the receiver by a length of coaxial cable, and the antenna signal is fed to the band-pass filter. One of twelve plug-in tunable filters is used to provide the required selectivity at the operating frequency. Tuning of the band-pass filter is accomplished by the front-panel controls. These controls are calibrated in frequency (red numerals) and in rf channels (white numerals). For the theory of operation and details of the band-pass filter, refer to paragraphs 225 and 271.

257. B-Band Tuner

a. General. Amplifier-Converter AM–913/TRC is the receiver B-band tuner. This tuner operates in the 100– to 225–mc frequency range, and consists of a single rf amplifier stage, a local oscillator, and a mixer stage. These three stages are tuned by the front-panel RF AMP tuning control.

b. Rf Amplifier Stage. The rf signal from the band-pass filter (or dummy filter, if used) is coupled through the cathode of rf amplifier stage VI. This stage operates as a grounded-grid amplifier. Some of the functions of the rf amplifier section are to improve sensitivity, to reduce image response, to improve the signal-to-noise ratio, and to limit oscillator radiation by isolating the local oscillator from the antenna circuit. The amplified output of the rf stage is applied to the tuned input circuit of mixer tube V2A.

c. Local Oscillator. Oscillator tube V2B produces the local-oscillator signal required for the heterodyne action of the receiver. The oscillator is tuned to operate 30 mc above the incoming rf signals, and its frequency is maintained constant by an afc system. The output of the local oscillator is fed to the input circuit of the mixer.

d. Mixer. The output of the rf amplifier heterodynes or beats with the output of the local oscillator in the mixer. The combination of the two frequencies produces a difference frequency in the mixer output, which is the intermediate frequency of the receiver. The mixer output is fed to first if. amplifier stage V102.

258. C-Band Tuner

a. General. Amplifier-Converter AM–914/TRC is the receiver C-band tuner. This tuner operates in the frequency range of 225 to 400 mc. It consists of two stages of cascade rf amplification, a mixer, a local oscillator, and a buffer amplifier.

b. Rf Amplifier Stages. The rf signal from the band-pass filter (or dummy filter, if used) is fed to first rf amplifier V1, where it is amplified and fed to second rf amplifier V2. These two rf stages operate as grounded-grid

amplifiers. The tuning of these stages is accomplished by ganged inductors at the front-panel RF AMP control. The output of the second rf amplifier is fed to the input circuit of mixer V3.

c. Local Oscillator. Oscillator tube V4 produces the local-oscillator signal required for the heterodyne action of the receiver. The tuning of the oscillator is performed by the two front-panel OSC COARSE and OSC FINE controls. The local oscillator is tuned to operate 30 mc below the incoming rf signals. The frequency of the oscillator is maintained constant by an afc system. The output of the local oscillator is fed to the input circuit of the mixer through a buffer amplifier.

d. Buffer Amplifier. Buffer amplifier tube V5 reduces loading effects of the local oscillator and thereby improves the frequency stability of the oscillator.

e. Mixer. The mixing of the outputs of both the second rf amplifier and the buffer amplifier takes place in the input circuit of the mixer. The frequency of the oscillator is always 30 mc lower than the received signal frequency; the output of the mixer, therefore, contains the 30-mc difference frequency. This output is fed to the first if amplifier.

259. If. Amplifiers, 30-mc

The intermediate-frequency output of the mixer is fed to the if. amplifiers, which consists of six tuned-amplifier stages using tubes V102 through V107. Double-tuned circuits tuned to 30 mc are used for the interstage circuits. Single-tuned circuits are used for the input and output circuits of the if. amplifiers. All the if. tuning coils have movable powered-iron cores that are adjusted for proper tuning. Most of the gain and selectivity of the receiver is provided by the if. amplifier section. The output of sixth if. stage V107 is fed both to the first limiter and to the agc circuit. Agc voltage is applied to each of the first four if. amplifier stages.

260. Limiters

The output of the sixth if. amplifier is fed to the limiters. Noise, fading, and interfering signals can cause amplitude modulation of the incoming fm signals. These amplitude variations in the signal are removed or clipped by the limiter stages. Limiter stages V109 and V110 are used to obtain the required limiting action. Single-tuned coupling circuits are used in the limiter stages. Germanium diodes are used as the limiters, and vacuum tubes V109 and V110 provide amplification to compensate for losses caused by the diodes. Squelching of the receiver base-band signal output is accomplished by the application of a negative voltage (—90 volts) to the grid of the second limiter tube.

261. Discriminator

The output of second limiter V110 is fed to discriminator circuit V111. The discriminator circuit demodulates the incoming fm signal; that is, converts the frequency variation of the fm signal into the base-band signal. This base-band signal is the original signal that was used to frequency modulate the rf carrier at the transmitter. The output of the discriminator stage is fed to the base-band amplifier through a de-emphasis network (par. 286*f*). This network compensates for the pre-emphasis inserted at the transmitter. The output of the discriminator is also used to regulate the automatic frequency control circuits and thus keep the receiver properly tuned. The discriminator output is also fed to the FREQ DRIFT meter to provide visual indication of the receiver tuning.

262. Base-Band Amplifier

The base-band signal output of the discriminator is fed to the base-band amplifier. This amplifier has three stages, V121, V122, V123, and employs negative feedback to stabilize the gain, fidelity, and output impedance of the amplifier. It is designed to amplify base-band signals of 250 to 68,000 cps. The input to the base-band amplifier is adjusted by the OUTPUT ADJ control (fig. 178). This control is used to adjust the output level of the receiver for transmission over spiral-four cable. The 600 OHMS—135 OHMS switch, S107 (fig. 174), selects the proper output impedance of the base-band amplifier to match the impedance of the spiral-four cable. The output of V123 is fed also to the MEASURE meter circuit, which provides a means of measuring the output levels.

263. Afc Circuits

The automatic frequency control circuits in the receiver utilize an electromechanical servo

system. This system keeps the local oscillator at the proper frequency. The local oscillator will tend to drift due to temperature changes or ac line voltage fluctuations. For example, if the frequency of the local oscillator changes, a change of equal magnitude will be produced in the intermediate frequency. This change results in a dc error signal appearing at the output of the discriminator. This error signal is applied to afc modulator V113. In the modulator, the error signal modulates a 60-cps voltage. The output of the modulator is amplified by stages V114, V115A, and V115B. The modulated error signal output of the third afc amplifier stage is applied to the control winding of a two-phase motor. A vernier capacitor on the shaft of the motor is connected in the tuned circuit of the local oscillator. The circuit is designed so that the motor and capacitor rotate in the proper direction to correct the frequency of the local oscillator, thus restoring the center frequency of the if. signal to 30 mc.

264. Agc Circuit

a. The agc circuit maintains the output of the receiver constant regardless of the strength of the input rf signal. A portion of the amplified if. signal from the output of the sixth if. stage is rectified. This rectified voltage is proportional to the amplitude of the if. signal. The rectified voltage is amplified in the triode section of tube V108 and is applied through a diode section to the first four if. amplifier stages as additional bias. With an increase in signal strength, the rectified voltage increases. This, in turn, increases the negative bias on the if. stages and thus decreases the gain of the if. amplifiers.

b. To maintain maximum sensitivity of the receiver during reception of weak signals, the agc voltage applied to the if. stages is delayed. Agc action does not take place until after the received signal strength exceeds some preset minimum value. This delaying action is accomplished by applying a small negative bias to the agc diode. For agc to take place, the received signal must develop a rectified voltage to overcome this bias. The delay bias is manually adjusted by the front-panel SQUELCH control.

265. Squelch Circuit

The squelch circuit consists of twin triode tube V125, squelch relay K101 (fig. 181), and associated circuit elements. The circuit functions to squelch or quiet the receiver, light ALARM lamp I 102, and ring buzzer I 103 whenever the incoming rf signal drops below a desired level. This level is adjusted by the SQUELCH control on the front panel. Switch S108, which is ganged to the SQUELCH control, is normally closed for all positions of the SQUELCH control except when maximum gain is desired. In this position (SQUELCH control to extreme right (R)), switch S108 is opened and the squelch circuit becomes inoperative.

266. Bias Supply

A low current drain negative voltage supply is used to provide voltage for the agc circuit and for the squelch circuit. The bias supply circuit consists of dual triode V112 (fig. 174), which is used as an rf oscillator and rectifier. An rf oscillator is used for this purpose, because of its favorable regulation characteristics with respect to supply voltage variations. The rectifier portion of the tube is connected as a diode.

267. MEASURE Meter Circuit

The receiver MEASURE meter circuit supplies a means of measuring signal levels and for checking circuit adjustments. The first seven positions on the MEASURE switch are used for circuit adjustment checks, the next two positions are used for output signal measurements, and the last position is used for checking B+. The circuits for measuring signal levels consist of dual triode V124, 1-kc filter FL102, 68-kc filter FL101, crystal rectifier CR108, MEASURE meter M102, and MEASURE switch S106. In conjunction with the 1-kc oscillator in the transmitter, this circuit also provides a means for calibrating the MEASURE meter circuit. For simplicity, some inputs to the MEASURE meter circuit have been omitted from the block diagram.

268. Calibrator

The calibrator is used to calibrate or check the dial settings of the local oscillator of the receiver. The calibrator consists of an 11-mc crystal oscillator and a harmonic generator stage. Harmonic generator V101 functions as an overdriven amplifier to provide an output

rich in harmonics. Although the amplitude of the higher harmonics in the output is progressively weaker, the sensitivity of the receiver is high enough to detect the higher harmonics necessary for calibration purposes.

269. Power Supply

The receiver power supply utilizes a conventional full-wave rectifier circuit. The voltage regulation of the power supply is improved by the use of an electronic voltage-regulator circuit. Tube V118 is connected in series with the load circuit. The voltage drop across this tube is varied to correspond to variations in the output voltage of the power supply. For example, an increase in the output voltage will result in an increase in the voltage drop across this series-regulator tube. This will decrease the output voltage and thereby maintain a nearly constant output voltage. The series-regulator tube therefore, functions as a variable resistor. A dc amplifier circuit, V119, automatically controls the grid bias and, therefore, the resistance of the series-regulator tube.

270. Antenna Theory

a. The operating frequency range of the receiver is in the very-high- and ultra-high-frequency bands. Radio waves at these frequencies tend to travel in straight lines. For this reason, line-of-sight transmission paths are of major importance, and should be unobstructed. Signal strength attenuates rapidly over paths that have obstructions between the transmitter and receiving antennas. The most important factors limiting line-of-sight transmission are the curvature of the earth and such obstructions as intervening hills.

b. Usually two antennas are mounted on a single mast, one for transmitting and one for receiving. Each antenna consists of a pair of dipoles mounted on a plane reflector. Conventional rod-type dipoles are used for the 225- to 400-mc range (C-band), and V-type dipoles are used for the 100- to 225-mc range (B-band). Either horizontal (dipoles horizontal) or vertical (dipoles vertical) polarization may be used. However, the antenna receiving the signal should be polarized similarly to the antenna sending the signal, or considerable attenuation will result.

c. Coaxial-cable transmission line is used to connect the antenna to the receiver. Coaxial cable (flexible concentric transmission line) consists of an accurately centered inner conductor, special insulation to reduce the losses encountered at vhf and uhf, an outer conductor and shield, and an overall insulated covering. This cable has a characteristic impedance of 50 ohms to match the half-wave center-fed dipoles.

271. Band-pass Filters

a. Six plug-in tunable rf filters are used to cover each band and to provide the required selectivity. In the B-band, each filter covers 21 mc; in the C-band, each filter covers 30 mc. All filters have a loss of less than 1 db at the operating frequencies and an attenuation of about 45 db or more at all frequencies more than 21 mc away from the operating frequencies in the B-band, or 30 mc in the C-band. The filter consists of two independently tunable, inductively coupled circuits. Each circuit is a quarter-wavelength coaxial line, the open end being capacity loaded. Refer to paragraph 225 for the theory discussion of these filters.

b. The signal from the receiving antenna is fed through a coaxial cable and a coaxial plug to the filter coaxial input jack. Tuning of the band-pass filter is accomplished by changing the cavity capacitance. The two tuning controls of each band-pass filter are calibrated in frequency (red numerals) and in rf channels (white numerals). The output of the band-pass filter is fed through a short piece of coaxial cable W103 to the input jack of the receiver tuner (fig. 276).

272. Rf Amplifier, Receiver B-Band Tuner (fig. 278)

a. The incoming rf signal from the band-pass filter is fed through 50-ohm coaxial cable W103 and through the low-pass filter consisting of capacitors C28, C29, and C30, and inductors L15 and L16, to the input tuned circuit. For sets on Order No. 16811–Phila–51 bearing serial numbers 201 and above, a shield has been added around the low-pass filter to minimize radiation from the tuner. Since the tuners are interchangeable and may have been replaced, it is possible that the above sets may not contain this addition. The low-pass filter attenuates input frequencies above 225 mc and thereby reduces image response. The input tuned circuit consists of variable inductor L1A, variable inductor L2, and capacitors C1, C2, and C3, and the

cathode-to-grid capacitance of the grounded-grid amplifier. Capacitor C2 is used as an impedance-matching device to couple the 50-ohm coaxial cable to the input tuned circuit. Trimmer capacitor C3 and variable inductor L2 are adjusted for proper circuit tracking with the dial calibrations. The tuned input circuit is coupled through capacitor C4 to the cathode of grounded-grid rf amplifier V1. The amplified rf signals appear in the tuned plate circuit of the rf amplifier. This tuned circuit consists of variable inductor L1B, variable inductor L6, capacitor C7, and the output capacitance of tube V1. Trimmer capacitor C7 and variable inductor L6 are used for proper circuit tracking.

b. Rf choke coils L3, L4, and L5 keep the heater at rf potentials above ground so that the moderately large heater-cathode capacitance will not bypass the input signal at the cathode to ground. Resistor R1 is the cathode-biasing resistor. Capacitors C5 and C6 are rf bypass capacitors. Resistor R2 and capacitors C8 and C9 form a decoupling network in the plate supply lead. Resistors R9 and R10 load the 150-volt and 6.3-volt supplies to approximate the power consumption, filament, and B+ voltages of the C-band tuner. Inductor L12 and capacitor C25 filter the ±150-volt dc supply; the 6.3-volt supply is filtered by inductor L13 and capacitor C26.

273. Local Oscillator, Receiver B-Band Tuner (fig. 278)

Local-oscillator tube V2B utilizes a series-fed Colpitts circuit with the cathode grounded. The tuned circuit consists of variable inductors L1D, L9, L10, capacitors C19, C20, C21, and C22, and the tube interelectrode capacitances. Variable inductors L9 and L10 and capacitor C21 are adjusted so that the local oscillator and rf tuned circuits will track properly at all settings of the tuning dial. Inductor L10 adjusts the local-oscillator frequency 30 mc above the incoming rf signals at the low end, capacitor C21 at the middle, and inductor L9 at the high end of the band. Capacitor C22 is the grid coupling capacitor. Capacitor C21 provides optimum feedback. Trimmer capacitor C19 is driven by the afc motor to correct the oscillator frequency in accordance with the afc error information. Resistor R6 is the grid leak. Resistor R7, bypassed by capacitor C23, provides a grid-current metering point. Resistor R8 is in series with the metering circuit to insure correct meter calibration. The plate supply lead is filtered by choke coil L12 and capacitor C25. Resistor R11 decouples the plate supply lead.

274. Mixer, Receiver B-Band Tuner (fig. 278)

a. Signals from the radio-frequency amplifier and the local oscillator are coupled to the mixer grid. The rf signals are coupled through capacitors C10 and C11. The output of the local oscillator is coupled through capacitor C12. The tuned input circuit of the mixer consists of variable inductors L7 and L10, capacitor C13, and the input capacity of mixer tube V2A. Variable inductor L7 is the high-frequency padder and capacitor C13 is the low-frequency padder. The mixer plate tuned circuit is tuned to the difference frequency of 30 mc, the receiver intermediate. The plate tuned circuit consists of variable inductor L8, capacitors C16 and C17, and the capacitances of the tube and the shielded lead from the mixer output to the if tuned circuit. On Order No. 16811–Phila–51, sets bearing serial numbers 601 and above, and on Order No. 32146–Phila–51, sets bearing serial numbers 40 and above, the value of capacitor C17 has been changed to 8 uuf and capacitor C17 has been added to shunt plate load inductor L8. These changes were made to prevent instability of the mixer output between frequencies of 99 and 140 mc.

b. Grid-leak bias is obtained by the mixer tube grid current that flows through grid-leak resistor R3. The bias voltage is applied also through resistor R4, bypassed by capacitor C14, and applied to the metering circuit to provide an indication of the local-oscillator drive to the mixer grid. Resistor R5 and capacitors C18 and C24 comprise a plate supply decoupling filter.

275. First Rf Amplifier, Receiver C-Band Tuner (fig. 279)

a. The first rf amplifier operates as a grounded-grid triode. The incoming rf signal from the band-pass filter is fed through a 50-ohm coaxial cable and is developed across rf choke L1. The nominal input impedance is 50 ohms. The amplified output is developed across the plate tuned circuit. This circuit consists of

Trimming: The fine adjustment.

the first section of ganged tuner L3A, trimmer inductor L4, capacitor C2, and the tube capacitances.

b. Resistor R1 and capacitors C4 and C21 form a decoupling network in the plate supply lead. Resistor R1 functions also as a current-limiting resistor. Choke coils L1 and L2, in series with the heater leads, keep the cathodes and heater at rf potentials above ground. This prevents input signal from being shorted to ground through the heater-cathode capacitance. Capacitor C1 is an rf bypass. It prevents interstage coupling through the common heater leads.

A parasitic suppressor suppresses unintended self-sustaining osc. or transient impulses.

276. Second Rf Amplifier, Receiver C-Band Tuner
(fig. 279)

a. The output of the first rf amplifier is applied to the grid of the second rf amplifier through coupling capacitor C3.

b. The two rf amplifier stages in the tuner are identical. Therefore, the discussion of the first rf amplifier (par. 275) applies also to the second rf amplifier except for differences in reference symbols.

277. Local Oscillator, Receiver C-Band Tuner
(fig. 279)

a. The local oscillator of the C-band tuner utilizes a twin triode type tube V4 connected in parallel. The grid leads are connected together through parasitic-suppressor resistor R13. The local-oscillator tuned circuit consists of a butterfly circuit. In the butterfly tuned circuit, a variable capacitor is used. The mechanical arrangement of the capacitor plates are such that the inherent inductance of the capacitor is used as the inductor of the tank circuit. The inherent inductance of the capacitor varies simultaneously with the capacitance. Thus, a wide frequency range is available.

b. Feedback capacitor C26 has a negative temperature coefficient and provides the small amount of temperature compensation required. Grid coupling capacitor C22 consists of the bracket supporting oscillator tube V4 as one plate, and the portion on which the bracket is attached as the other plate. A thin piece of mica, insulating the two plates, serves as the dielectric. Trimmer capacitor C23 is adjusted at the high-frequency end of the band. For low-end trimming, the dial is rotated slightly with respect to the butterfly by means of a dial positioning screwdriver adjustment located on the back of the dial. Capacitor C24 is the afc capacitor and is integral to the butterfly structure. This capacitor consists of an insulated rotor mounted between two stator plates in a semibutterfly arrangement. The afc motor is mechanically coupled to the rotor and is capable of frequency correction up to several hundred kc. Choke coils L14, L15, and L16 keep the tuned circuit, heater, and cathode above rf ground potential. Capacitors C25 and C27 are bypass capacitors for the plate and heaters. When the oscillator grids become more positive than the cathode, current flows and charges capacitor C22. When the grid voltage decreases during the remainder of the rf cycle, capacitor C22 discharges slightly through grid resistors R7 and R8 to develop a bias voltage. Resistor R8 is bypassed by capacitor C28. The potential across resistor R8 is proportional to the amplitude of oscillations and is applied to the receiver MEASURE meter when the MEASURE switch is in the OSC position. Inductor L22 and capacitors C28 and C37 provide additional filtering for the voltage applied to the meter.

278. Buffer Amplifier, Receiver C-Band Tuner
(fig. 279)

a. The output of the local oscillator is coupled through capacitor C29 to the cathode of the buffer amplifier. The amplified signals appear across the tuned plate circuit consisting of L3D, L18, and trimmer capacitor C32. The grounded-grid buffer amplifier operates over the same frequency range as the local oscillator. Therefore, inductor L3D differs in shape from the other ganged sections to compensate for the 30-mc difference in operating range. The output of the buffer amplifier is applied to the cathode of the mixer through blocking capacitor C30.

b. Resistor R9 is the cathode-biasing resistor. It is shunted by bypass capacitor C31. Choke coil L17 keeps the cathode above rf ground potential. Resistor R10 and capacitor C33 form a decoupling network in the plate supply lead.

279. Mixer, Receiver C-Band Tuner
(fig. 279)

a. The amplified rf signals from the second

rf stage are coupled to the tuned input circuit of the mixer tube through variable capacitor C8. Capacitor C8 consists of two parallel insulated copper strips. The capacitance is varied by bending the outer strip. Capacitor C8 is set for approximately critical coupling between the two tuned circuits at the high end of the band. With this adjustment, the coupling is slightly less than critical at the low end of the band. The rf signal is developed across the tuned input circuit, which consists of variable inductor L3C, trimmer inductor L9, capacitor C9, and the mixer tube input capacitance. The rf signal is coupled through capacitor C11 to the mixer cathode. The difference frequency of 30-mc between the outputs of the buffer and rf amplifier is developed in the plate circuit of the mixer. The tuned plate circuit of the mixer consists of variable inductor L13, capacitors C16 and C17, and the capacitance of the tube and the shielded lead from the mixer output to the if. tuned circuit. The output is applied through parasitic-suppressor resistor R12 and coupling capacitor C18 to connector J2. Crystal rectifier CR1 limits the mixer output that is applied to the 30-mc if. amplifier stages. If it were not for this limiting action, the agc voltage applied to the if. amplifier would vary over a wide range. Dc grid voltage variations would produce variations in input capacitance (Miller effect), and these varying capacitances would detune the mixer output circuit and the interstage circuits in the if. amplifier. For receivers on Order No. 16811–Phila–51, bearing serial number 176 and above, and on Order No. 32146–Phila–51, bearing serial numbers 1 and above, the plate circuit of the C-band tuners has been modified as shown in the insert to figure 278. The current through crystal rectifier CR1 is limited by the bias that the rectified current develops across resistor R14.

b. Capacitor C13 grounds the grid. Resistors R4 and R5 are the grid-leak resistors. Resistor R5, bypassed by capacitor C14, provides a grid-current metering point and a test point for circuit alignment. Resistor R11 is an isolating resistor in the metering lead. Choke coil L11 is the dc path to ground for the cathode. Resistor R6 and capacitors C19 and C20 form a decoupling network for the plate supply lead.

280. Receiver 30-mc If. Amplifier

All six if. amplifier stages in the receiver are similar. In the discussion which follows (par. 281–283), only the first if. stage will be discussed in detail. However, the differences which exist in succeeding stages are covered in paragraphs 282 and 283. The schematic diagram for the first 30-mc if. amplifier is shown in figure 175.

281. First 30-mc If. Amplifier (fig. 175)

a. The output of the mixer is coupled to the single-tuned input circuit of the first if. amplifier through jack J113. The single-tuned input circuit consists of capacitors C119 and C120, inductor L111, and resistor R107. The impedance-dividing effect of capacitors C119 and C120 makes the input impedance approximately 75 ohms. Resistor R107 broadens the frequency response by lowering the Q of the circuit. The signal developed across the tuned circuit is coupled to the control grid of V102 through capacitor C121. The amplified signal appears across double-tuned circuit Z102. Double-tuned circuit Z102 consists of variable inductors L112 and L113, capacitors C124 and C127, and resistors R113 and R116. The tuned circuit is resonant at a frequency of 30 mc. Critical alignment of this tuned circuit is performed by adjusting the tuning slugs of inductors L112 and L113. Resistors R113 and R116 shunt the primary and secondary of the double-tuned circuit to broaden the bandwidth.

b. Resistor R108 is used as the grid return. Resistor R109 is the cathode-biasing resistor. This resistor is unbypassed to introduce some degeneration. This degeneration reduces detuning caused by the Miller effect; that is, detuning caused by the variations in the grid capacitance due to changes in the grid bias. Resistor R111 is a parasitic suppressor in the screen-grid circuit. Capacitor C123 is the if. bypass for the screen circuit. Resistor R112 is a parasitic suppressor in the plate circuit. Resistors R114 and R115 and capacitors C125 and C126 form a decoupling network for the plate and screen supply voltages. The ungrounded side of the heater is bypassed to ground by capacitor C163 (fig. 276). The heater is further isolated by choke coil L123 and capacitor C168. This if. bypassing of the heaters prevents interstage coupling through the common heater leads.

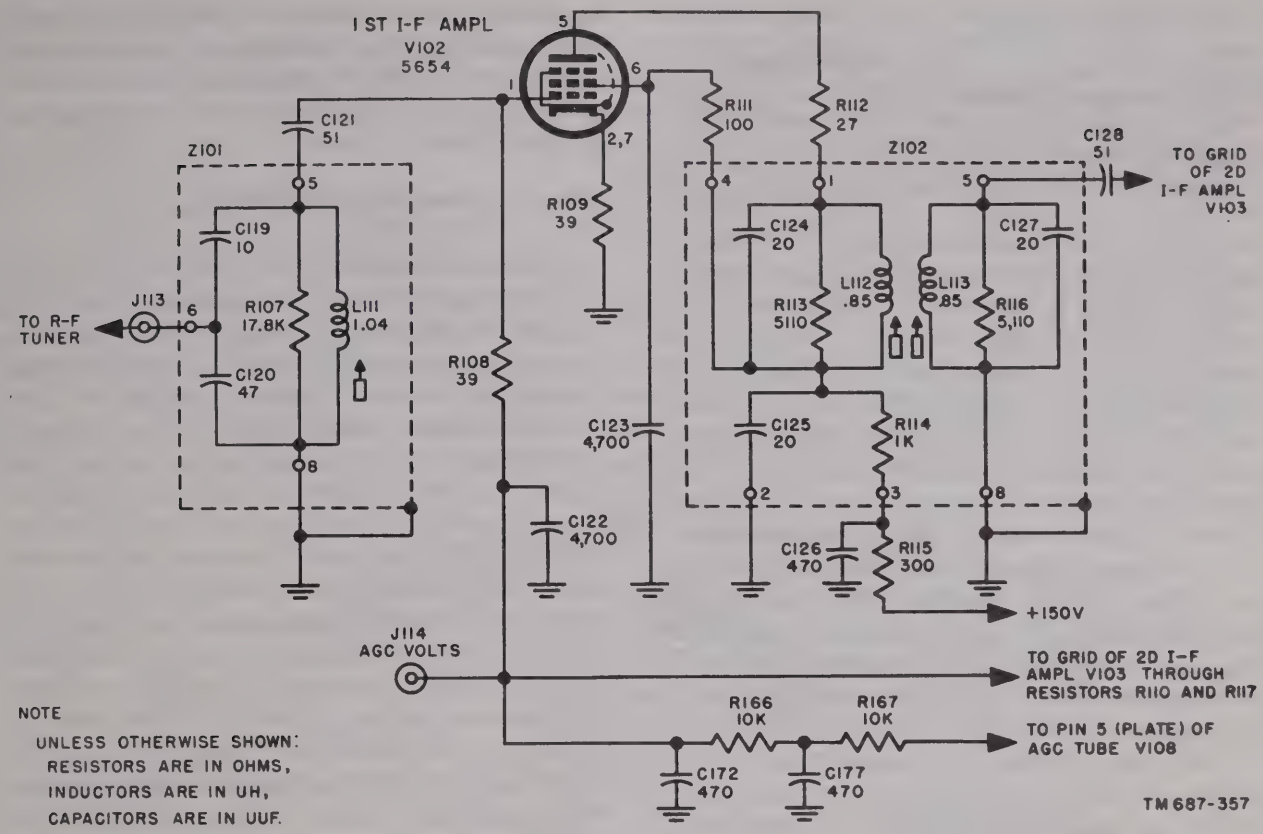

Figure 175. First 30-mc if. amplifier.

282. Second, Third, and Fourth 30-mc If. Amplifiers
(fig. 276)

a. The first four if. amplifiers are almost identical except that in the grid circuit of the first if. amplifier (Z101) the transformer is single-tuned. Reference symbols are also different for each stage.

b. Decoupling resistor R125 is common to the plate and screen supplies of both the first and second if. stages. Resistor R133 and capacitor C140 form a decoupling network for the screen and plate supply of the third if. stage. Decoupling resistor R150 is common to both the plate and screen supplies of the fourth and fifth if. stages. Resistor R144 and capacitor C147 form a decoupling network for the plate and screen supply of the fourth if. stage.

283. Fifth and Sixth 30-mc If. Amplifiers
(fig. 276)

a. The agc voltage is not applied to the fifth and sixth if. amplifiers. The cathode-biasing resistors are bypassed and do not cause degeneration of the signal. Capacitor C150 is a bypass for biasing resistor R145 of the fifth stage, and capacitor C157 bypasses cathode resistor R153 of the sixth if. amplifier stage. Capacitor C162 decouples the plate and screen supply voltages.

b. The amplified output of the sixth 30-mc if. amplifier section appears across single-tuned circuit Z107. This single-tuned circuit consists of variable inductor L122, resistor R156, and capacitors C160 and C161. The junction of these capacitors provide an impedance-matching network to the first limiter stage at output connector P108. This junction has an impedance to ground of approximately 75 ohms. Capacitor C183 couples the output of the sixth if. amplifier section to the agc circuit. The output of the if. amplifier is fed also to the input circuit of the first limiter stage.

284. Receiver First Limiter
(fig. 176)

a. The output of the sixth if. amplifier is coupled through capacitor C184 to the input tuned circuit of the first limiter. The input tuned circuit consists of adjustable inductor

L124, capacitors C186 and C190, and the input capacitance of tube V109. A limiter circuit consisting of crystal rectifiers CR103 and CR104 is connected across the tuned circuit and limits the positive and negative peaks of the if. signal applied to the grid of tube V109. The limiter input circuit is biased by the cathode circuit of second limiter V110. The second-limiter cathode current flowing through resistor R188 produces a positive voltage across the resistor. The positive voltage is filtered by inductor L125 and capacitor C189. The crystal rectifiers form a voltage divider across capacitor C189 and the equal dc voltages that appear across the rectifiers keep the rectifiers from conducting when the instantaneous if. voltage is below the bias voltage. When the instantaneous if. voltage becomes more positive than the bias voltage, crystal rectifier CR103 conducts; when the negative peak exceeds the bias voltage, crystal rectifier CR104 conducts. The crystal rectifiers are held at ac ground potential by capacitors C187 and C189 and, when either of the crystal rectifiers is conducting, it presents a low-resistance shunt to ground and thereby prevents the applied if. voltage from exceeding the bias voltage.

b. With respect to the signal path, the two crystal rectifiers are in parallel. With respect to the dc path, the two rectifiers are in series with each other and with resistors R171 and R188 and inductor L125. The direct current that flows through resistor R171 produces a negative voltage across the resistor. The voltage is proportional to the amount of direct current flowing through the crystal rectifiers. This current flow, in turn, is proportional to the limiting produced by the rectifiers. The voltage across resistor R171 is applied through the filter consisting of resistor R172 and capacitors C187 and C188 to the receiver MEASURE meter when the MEASURE switch is in the 1ST LIM position.

c. The limited signal is developed across grid-leak resistor R173, is applied to the grid of tube V109, and is amplified. The amplified signal is developed across the tuned plate circuit consisting of adjustable inductor L127, the output capacitance of tube V109, and the input capacitance of tube V110. Resistor R176 shunts the tuned circuit and broadens the bandwidth. Resistor R174 suppresses parasitic oscillations. Plate and screen voltage is supplied through the decoupling filter consisting of resistor R175 and capacitor C192. Cathode bias is developed across resistor R316, which is bypassed by capacitor C191.

285. Receiver Second Limiter
(fig. 176)

a. The amplified signal appearing across the tuned plate circuit of first limiter tube V109 is coupled to the grid of the second-limiter stage through capacitors C193 and C197. The input circuit of the second limiter consists of two crystal rectifiers connected in a back-to-back arrangement. The positive biasing voltage for crystal rectifiers CR105 and CR106 is obtained from second-limiter cathode resistors R188 and R317. This limiter circuit functions in the same manner as the one in the first limiter grid circuit. The voltage across resistor R177 is proportional to the limiting action of crystal rectifier CR106. This voltage is filtered by resistor R178 and capacitors C194 and C195 and is applied to the MEASURE meter when the MEASURE switch in in the 2ND LIM position. Filtering resistor R178 has been increased to 1,500 ohms in some receiver limiters to decrease the indication obtained on the MEASURE meter when the MEASURE switch is in the 2ND LIM position. The limiter signal is coupled through capacitor C197, is developed across grid resistor R179, and is amplified and limited. Tube V110 operates with a low value of screen voltage causing the tube to cut off and be saturated at alternate peaks of the previously limited applied signal. Screen-dropping resistor R318 has been changed to 51,000 ohms for receivers on Order No. 32146–Phila–51. The amplified and limited voltage at the plate is developed across rf choke L130. Resistor R181 is a parasitic suppressor. The voltage across the rf choke is coupled through capacitor C200 to the tuned circuit consisting of adjustable inductor L131 and fixed capacitor C201. The output of this tuned circuit is inductively coupled to the discriminator circuit.

b. With a normal rf signal being received, grid resistor R179 is connected to ground through contacts 4 and 5 of relay K101 in the squelch circuit, and the —90-volt output of the bias supply is dropped across resistor R306. Whenever the incoming radio signals drop below a desired level, relay K101 disconnects grid

resistor R179 from ground and the —90-volt squelch bias is now applied to the grid of second-limiter tube V110; thereby cutting off the tube and eliminating the noise that would otherwise be transmitted from the receiver to other stations in the system.

c. Cathode bias is obtained from cathode resistors R188 and R317. Choke coil L129 and capacitor C198 comprise an isolating filter in the cathode circuit of tube V110. Screen voltage is applied through dropping resistor R318. Capacitor C199 is the screen bypass. Plate voltage is supplied through plate decoupling filter consisting of resistor R180 and capacitor C286.

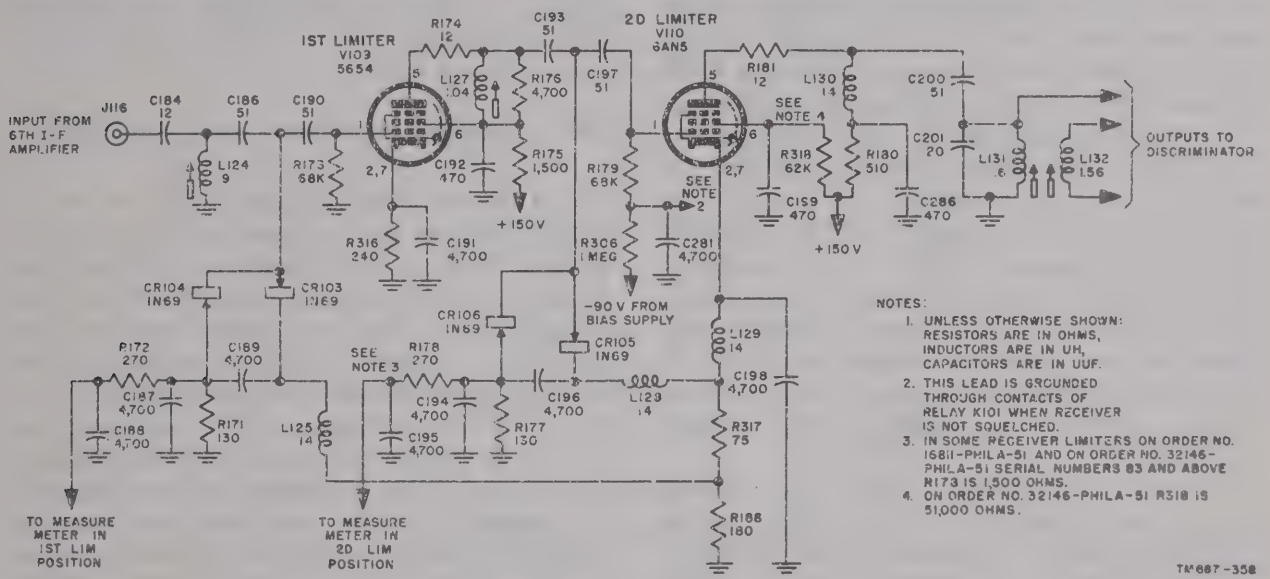

Figure 176. Receiver limiters.

286. Receiver Discriminator (fig. 177)

a. The if. signal voltage applied to each of the two diode plates of discriminator tube V111 from the output of the second limiter is the resultant of two component voltages. One component of the resultant voltage is due to the capacitive coupling through capacitors C200 and C202 or C203. This if. voltage appearing on the plates of the diodes is in prase with the output voltage of the second limiter. The polarity of this signal is the same on both plates. The second voltage component of the resultant is inductively coupled by transformer Z111. The inductively coupled voltage components appearing on the plates of the diodes are 90° out of phase with the voltage component that is capacitively coupled to the plates of the diodes and are 180° out of phase with each other.

b. In the following discussion, all voltages are in reference to ground. Transformer Z111 is tuned to resonance at the intermediate frequency. Voltage E1 (across the primary circuit) is opposite in polarity to voltage E2 (induced in the secondary coil). The tuned secondary circuit can be considered as a series-resonant circuit. At resonance, secondary current I 2 is in phase with induced voltage E2. Voltage E3 across capacitors C202 and C203 will lag current I 2 by 90°. Thus, the voltage across capacitors lags induced secondary voltage E2, and leads primary voltage E1 by 90°. This condition, at resonance, is shown vectorially in B, figure 177. At a frequency above resonance, the tuned circuit presents an inductive reactance to induced voltage E2. Secondary current I 2 lags induced voltage E2, and voltage E3 now leads E1 by less than 90°. This is shown in B, figure 177. At a frequency below resonance, the tuned circuit presents a capacitive reactance to induced voltage E2, and E3 will now lead E1 by more than 90°. This is shown in B, figure 177.

c. The resultant if. voltage applied to the plate, pin 7, of tube V111A is equal to E1 plus the voltage —E3/2 across capacitor C202. This is shown in C, figure 177 as ED1. The resultant if. voltage applied to the plate, pin 2, of tube V111B is equal to E1 plus the voltage —E3/2

across capacitor C203. This resultant is shown as ED2. At resonance, ED1 equals ED2 and both diodes conduct equally. Resistors R182 and R183 provide the dc return paths for the rectified currents of the diodes. The dc path for the rectified current of diode V111A is from ground through resistors R187 and R185, through inductor L133, diode V111A, inductor L132, and resistors R183 and R184, to ground. The rectified direct current path for diode V111B is from ground through resistors R184 and diode V111B, inductor L132, resistor R182, inductor L133, and resistors R185 and R187, to ground. The common load for both diodes is the voltage divider consisting of resistors R185 and R187. When the applied frequency is at resonance, the two diode currents flowing through common load resistors R185 and R187 are equal and opposite and the output is zero.

d. When the applied if. signal goes above 30 mc, the phase angle between +E3 and E1 decreases and that between −E3 and E1 increases. Therefore, the resultant ED1 increases and ED2 decreases. Under these conditions, diode V111A will conduct more current than diode V111B and a positive output voltage will appear at jack J117. At frequencies below 30 mc, the opposite effect is produced, as shown in C, figure 177, and a negative output voltage will result.

e. Capacitors C204 and C205 are used to balance the capacitances of the diode plates to ground. Capacitor C205 is factory adjusted. Resistor R184 with capacitor C207 provides the same filtering action obtained in the cathode circuits of diode V111A.

f. A de-emphasis circuit is used in the receiver to attenuate the high frequencies and compensate for the pre-emphasis introduced in the transmitter. This attenuation of the high frequencies will also attenuate noise and improve the overall signal-to-noise ratio of the system. The base-band signal output from the discriminator cathode (pin 1) of diode V111A is connected through choke coil L133 to the de-emphasis network. The network consists of resistors R185 and R186 and capacitor C208. The output of the de-emphasis network is fed through connector J117 to the first base-band amplifier (par. 287).

g. With no incoming signal when the discriminator is properly tuned, the dc voltages developed across common load resistors R185 and R187 are equal and opposite due to equal rectified currents in the two diodes. This results in zero dc output from the discriminator. When the signal causes a frequency shift to either side of the center frequency, the diode outputs are unbalanced and a positive or negative voltage (depending on which side of center the carrier is) appears at the output of the discriminator. The dc output voltage of the discriminator is applied both to the afc circuits (par. 290–293) and to the FREQ DRIFT meter, M101, which provides an indication of correct afc operation or tuning. Choke coil L133, resistor R193, and capacitor C216 comprise a decoupling filter in the meter lead. Resistor R193 is of the proper value to give approximately full-scale meter deflection on discriminator voltage peaks.

287. First Receiver Base-band Amplifier (fig. 178)

a. The base-band output from the de-emphasis network in the discriminator circuit is coupled to the grid of the first base-band amplifier stage through capacitor C238. In some receivers on Order No. 16811–Phila–51, the base-band amplifier contains capacitor C294. This capacitor shunts capacitor C238 and OUTPUT ADJ potentiometer R232 and is a part of the de-emphasis network of discriminator V111 (par. 286*f*). A cathode input circuit is also provided in the first base-band amplifier stage for the order-wire signals from the microphone amplifier. The OUTPUT ADJ control is used to adjust the receiver base-band output level in 1-db steps. The grid dc return path is through this control. The amplifier output is developed across plate load resistor R240.

b. Self-biasing is obtained through cathode resistors R236 and R237. The screen voltage is supplied through screen-dropping resistor R239. Capacitor C244 is the screen bypass. The plate and screen currents are both supplied from the regular +150-volt supply through the decoupling network consisting of resistor R241 and capacitor C243A.

288. Second Receiver Base-band Amplifier (fig. 178)

a. The second base-band amplifier stage uses a twin triode, V122, connected as a cathode-coupled amplifier. The output signal from the first base-band amplifier is coupled to the grid

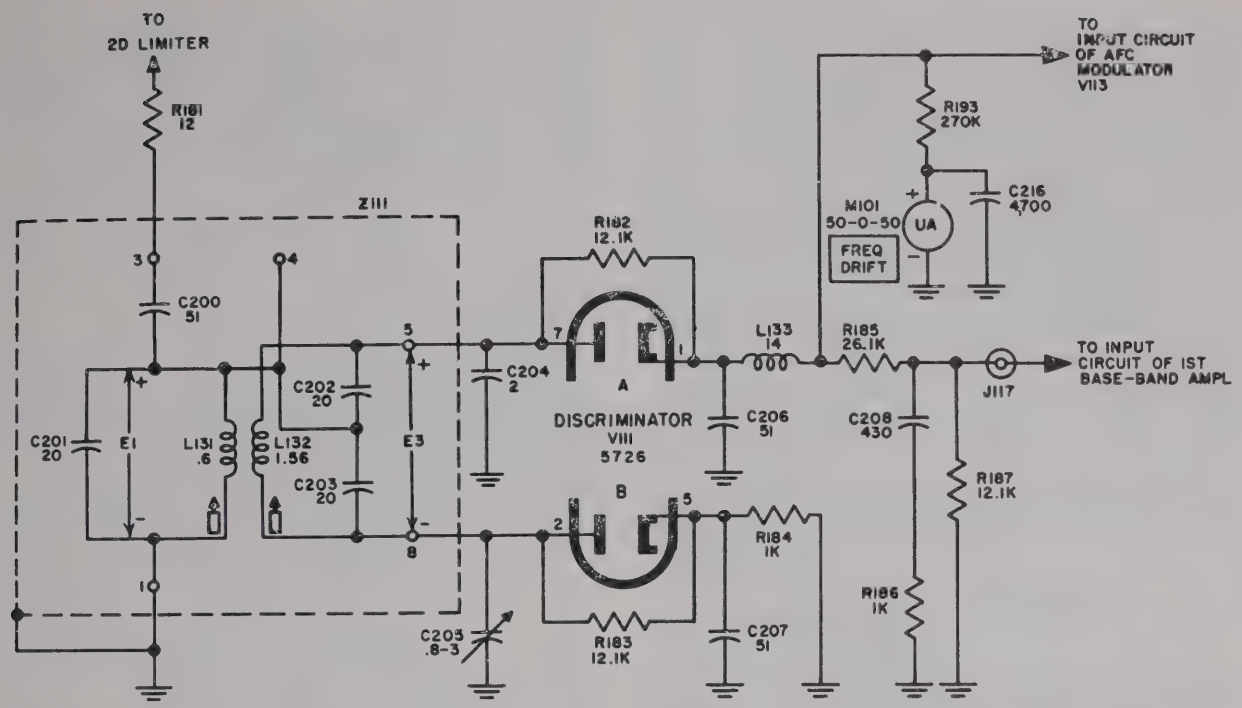

A. DISCRIMINATOR SCHEMATIC

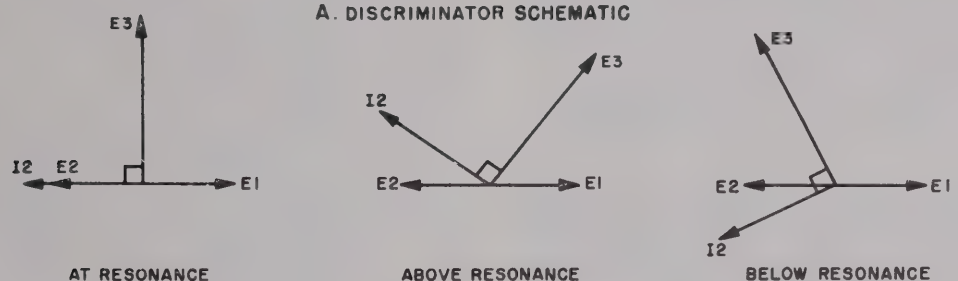

B. COMPONENT APPLIED VOLTAGES, VECTOR DIAGRAM

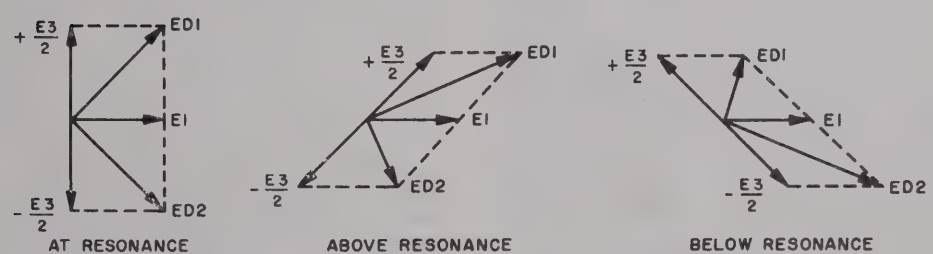

C. RESULTANT APPLIED VOLTAGES, VECTOR DIAGRAM

NOTES: 1. UNLESS OTHERWISE SHOWN: RESISTORS ARE IN OHMS, INDUCTORS ARE IN UH, CAPACITORS ARE IN UUF

2. E1 = PRIMARY VOLTAGE
E2 = VOLTAGE INDUCED IN SECONDARY WINDING
I2 = CURRENT IN SECONDARY CIRCUIT
E3 = REACTIVE VOLTAGE DROP ACROSS SECONDARY CIRCUIT
ED1 = RESULTANT R-F VOLTAGE AT PIN 7 OF DIODE V111A
ED2 = RESULTANT R-F VOLTAGE AT PIN 2 OF DIODE V111B

TM687-359

Figure 177. Receiver discriminator and vector diagrams.

of tube V122A through capacitor C245. Tube V122A operates as a cathode follower. The output of tube V122A is developed across cathode resistors R244 and R245 and is applied to the cathode of tube V122B. This tube is connected as a grounded-grid amplifier and the grid is connected to a-c ground through parasitic suppressor R311 and capacitor C246. The output signal of second triode section V122B is developed across plate load resistor R246. The plate load resistor is shunted by the series combination of capacitor C247 and resistor R321. This shunt reduces the load impedance, and hence the gain, at higher base-band frequencies.

b. Resistors R242 and R243 are the grid-leak resistors for V122A, and resistor R310 is the parasitic suppressor. The proper operating bias for the two triodes is obtained by connecting common grid return resistor R243 to the junction of cathode resistors R244 and R245. Resistor R247, in the plate circuit of V122B, and capacitor C243B form a decoupling network for the plate voltage supply.

289. Third Receiver Base-band Amplifier (fig. 178)

a. The output signal of V122B is coupled through capacitor C248 to the control grid of third base-band amplifier V123. The amplified output signal is developed across the primary of output transformer T103.

b. Resistor R248 is the grid leak. Cathode bias is developed across unbypassed cathode resistor R249. Screen voltage is supplied from the regulated 150-volt supply through unbypassed screen-dropping resistor R250. Plate voltage is supplied from the regulated 150-volt through the primary winding of output transformer T103 and feedback bridge resistor R251.

c. The gain, fidelity, and output impedance of the base-band amplifier are stabilized by the application of negative feedback. The feedback voltage is applied from a tap on the primary of output transformer T103 to the cathode of the first base-band amplifier stage through a voltage-divider network consisting of feedback resistor R235, blocking capacitor C242 and lower cathode resistor R237. The frequency response of this feedback network is modified by three shunt paths around resistor R235 and capacitor C242. The shunt paths consist of capacitors C239, C240, and C241 and resistors R233 and R234. In some sets on Order No. 16811–Phila–51 and also on sets bearing serial numbers 1 and above on Order No. 32146–Phila–51, the values of resistors R333 and R334 have been changed to 22,000 and 6,800 ohms, respectively. The change in resistor values modifies the negative feedback of the amplifier, and a flatter response is obtained.

d. Output transformer T103 provides the necessary impedance match between the output of the base-band amplifier and either the 600-ohm or 135-ohm spiral-four cable.

(1) The 135-ohm spiral-four cable is used between radio sets in a radio system and between the radio-terminal sets and the AN/TCC–7 telephone system. For operation with 135-ohm cable, the 600 OHMS-135 OHMS switch is in the 135 OHMS position. With the switch in this position, the output across terminals 2 and 5 of transformer T103 is connected to the REC binding posts.

(2) The 600-ohm spiral-four cable is used between the radio-terminal sets and the AN/TCC–3 telephone system. When the 600 OHMS–135 OHMS switch is in the 600 OHMS position, the output across terminals 1 and 6 of transformer T103 is connected through the 10-db attenuator consisting of resistors R312, R313, R314, and R315 to the REC binding posts. The attenuator reduces the output of the receiver so that the transmission level is 0 db to the AN/TCC–3 system.

(3) Two lightning arresters, E154 and E155, are connected between the REC binding posts and ground to protect the equipment and operating personnel against high-voltage surges from the connected spiral-four cable.

(4) Capacitor C251 is connected across 600-ohm output terminals 1 and 6 of transformer T103 to resonate the leakage inductance of the output transformer. This maintains the impedance match at frequencies up to 68,000 cps.

e. A portion of the output of the base-band amplifier is fed through capacitor C250 to first

phone amplifier V126A. A 1-kc band-pass filter, FL102, and a 68-kc band-pass filter, FL101 (fig. 276), are connected across the secondary winding of output transformer T103 for selecting and measuring the output power of the base-band amplifier at these frequencies.

290. Receiver Afc Modulator (fig. 179)

a. The output of the discriminator is fed to afc modulator tube V113A through a phase equalizing network. This network consists of resistors R194 and R195 and capacitor C217. The equalizer compensates for afc motor inertia and for any phase shift caused by the low-pass filter made up of resistors R198 and R199 and capacitors C218 and C219. The low-pass filter has a cutoff frequency of 18 cycles to filter the power-supply ripple frequency and base-band signals.

b. The output of the low-pass filter is fed to the grid of afc modulator tube V113A, which is part of dual triode V113. Dual triode V113 functions as a balanced modulator. In normal operation (with switch S102 in the nondisabled position), a portion of the 6.3-volt ac heater voltage is applied to the cathodes through resistors R308 and R201 and contacts 1 and 2 of switch S102. With no error signal applied from the discriminator, the 60-cycle input to the cathodes is balanced out in the push-pull plate circuit and, consequently, no output voltage exists across the primary winding of transformer T101. With an error signal applied to the grid of tube V113A, plate current will increase or decrease. The balanced state no longer exists, and an output voltage will appear across the primary of transformer T101.

c. Resistors R201 and R202 form a voltage divider across the 6.3 heater voltage. A portion of this voltage is applied to the cathodes of the modulator tubes. Resistor R200 and capacitor C220 in the grid circuit of V113B are used to balance the input circuit with that of tube V113A. Plate supply voltage is applied to the modulator stage through plate load resistors R203 and R205. The AFC BAL control, potentiometer R204, is adjusted to balance out the 60-cps output voltage when no error signal is present. In some afc circuits on Order No. 16811–Phila–51, the values of resistors R201, R202, R203, R204, and R205 are changed to 147K, 3,480, 5,110, 10K, and 5,110 ohms, respectively. This change was made to prevent the possible unbalance and resulting low output of the modulator. The new value of resistor R202 changes the quiescent operating point of the tube, thus increasing its gain. The new value of resistor R201, together with the new value of R202, reduces the 6.3-volt ac input to the stage. However, the same output level as in the previous circuit is obtained due to the increased stage gain. The value of potentiometer R204 was increased to provide a greater range of adjustment. The values of resistors R203 and R205 were changed to compensate for the increased value of potentiometer R204, and thus maintaining approximately the same total resistance across terminals 1–2 of transformer T101.

291. Receiver First Afc Amplifier (fig. 179)

a. The output voltage present in the modulator plate circuit due to an error signal is coupled by the secondary of transformer T101 to the grid of the first afc amplifier. The amplified output of V114 appears across plate load resistor R210.

b. Resistors R206 and R207 in the grid circuit form a voltage divider in the feedback loop. The portion of feedback voltage developed across R207 is applied to the grid of tube V114. Resistor R208 is the cathode-biasing resistor. This resistor is unbypassed and the stage has some degeneration to improve gain stability. Screen voltage is applied through resistor R209. The screen is kept at rf ground potential by capacitor C223. Resistor R211 and capacitor C224 form a decoupling network for the plate and screen voltage supplies.

292. Receiver Second Afc Amplifier (fig. 179)

The amplified output of the first afc amplifier is coupled through capacitor C226 to the grid of second afc amplifier tube V115A. The amplified output appears across plate load resistor R213. Resistor R212 is the grid leak. Capacitor C225, shunted across the input, limits the bandwidth and improves stability.

293. Receiver Third Afc Amplifier (fig. 179)

a. The amplified output of the second afc

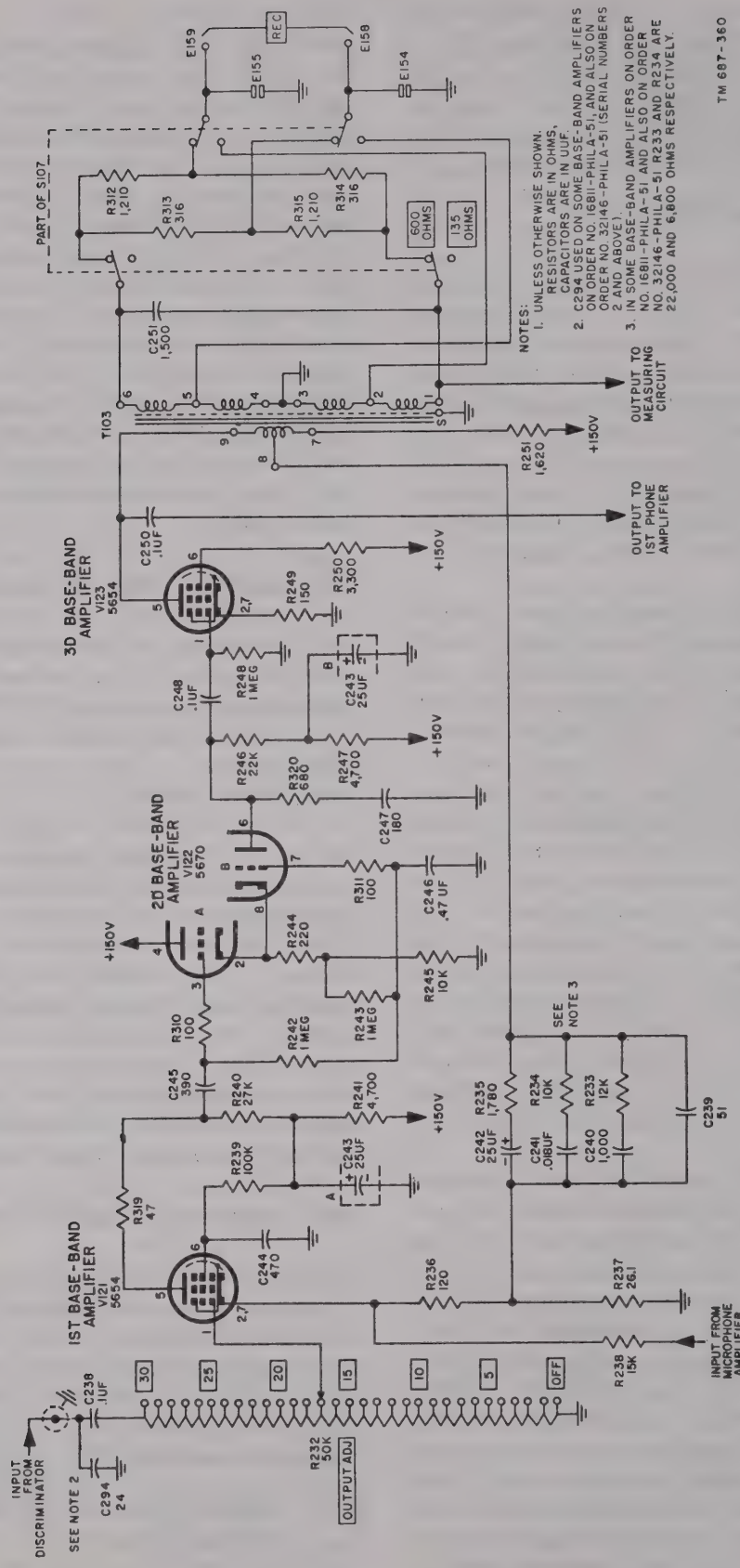

Figure 178. Receiver base-band amplifiers.

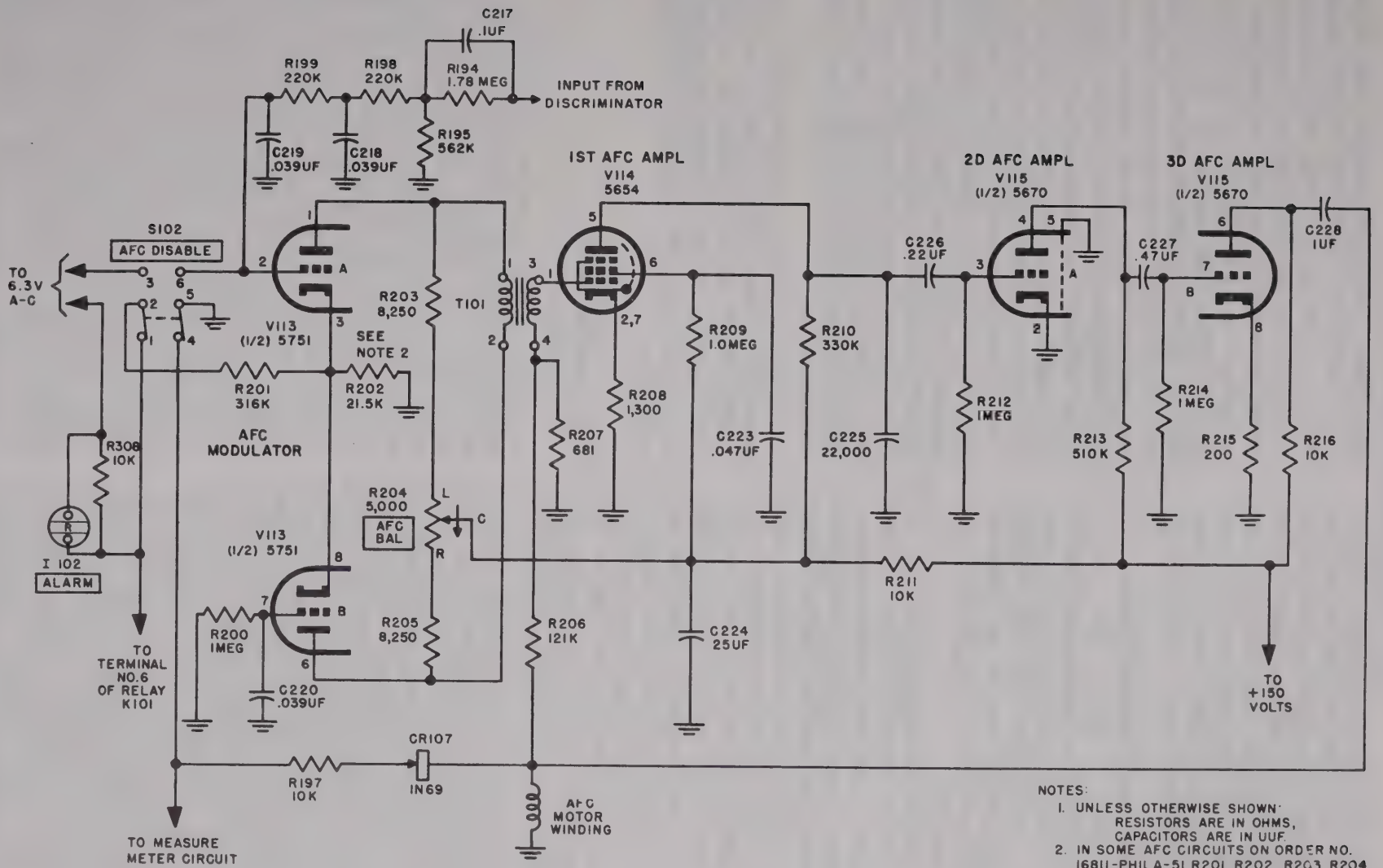

NOTES:
1. UNLESS OTHERWISE SHOWN: RESISTORS ARE IN OHMS, CAPACITORS ARE IN UUF.
2. IN SOME AFC CIRCUITS ON ORDER NO. 16811-PHILA-51 R201, R202, R203, R204, AND R205 ARE 147K, 3480, 5110, 10K AND 5110 OHMS RESPECTIVELY.

TM 68X-361

Figure 179. Afc circuit.

amplifier is coupled through capacitor C227 to the grid of the third afc amplifier stage, tube V115B. The amplified output appears across plate load resistor R216 and is coupled through capacitor C228 to the afc motor in the rf tuner.

b. Resistor R214 is the grid leak. Cathode-biasing resistor R215 is unbypassed to provide some degeneration and improve stage stability.

294. Automatic Gain Control Circuits (fig. 180)

a. Agc tube V108 and associated circuits function as a part of the SQUELCH control (par. 295), a signal-level indicator, an agc detector, a delayed agc, and an agc amplifier. A schematic drawing of the agc circuit is shown in figure 180.

b. The if. output voltage from the plate circuit of the sixth if. amplifier stage is coupled through capacitor C183 and applied across resistor R169 and capacitor C278. The portion of the if. signal across resistor R169 is rectified by crystal rectifier CR102 and appears across load resistor R164. The rectified voltage is filtered by resistor R165 and capacitor C176. The dc voltage across capacitor C176 is proportional to the if. output of the sixth if. amplifier and is applied to the grid of the triode section of tube V108. The triode section is connected as a dc amplifier with load resistor R161 in the cathode circuit. The cathode circuit is connected to —90-volt bias and is bypassed by capacitor C180.

c. In the absence of an incoming carrier, the bias on the grid is essentially zero. The triode plate current makes the cathode positive with respect to ground. Since the cathode is connected to —90 volts through cathode load resistor R161, the net cathode potential (145 minus 90 volts) is approximately +55 volts. Diode pin 5 is the agc control diode plate and is connected through resistor R160 to a voltage divider consisting of resistors R158 and R159 and SQUELCH potentiometer R170. The voltage divider is connected between —90 volts and ground and, depending on the SQUELCH potentiometer setting, the bias on the diode can be adjusted from approximately — 3 to —9 volts. Because this diode is connected to the divider network through isolating resistor R160, the bias on the agc controlled if. amplifiers is also variable from —3 to —9 volts.

d. With no applied signal, the agc control plate diode (pin 5) is negative with respect to the cathode and the diode cannot conduct. When a carrier is received, crystal rectifier CR102 rectifies the signal and the negative dc voltage developed across load resistor R164 is fed through resistor R165 to the grid of the triode and the plate current of the triode is reduced. As the strength of the received signal increases, the plate current is reduced still further and the voltage across cathode resistor R161 is decreased. As the cathode potential decreases below the minimum bias applied to the plate (pin 5) of tube V108, the agc control diode begins to conduct. The agc voltage developed across the cathode load resistor is then applied through the conducting diode to the controlled if. amplifier stages. A decoupling network consisting of resistors R167 and R168 and capacitors C178, C177, and C172 is used to decouple the agc circuit from the if. amplifiers. Jack J114 is provided for negative agc voltage measurements.

e. The plate (pin 7) of tube V108 is connected to the plate supply through decoupling resistor R168 and is bypassed by capacitor C182. Capacitors C181 and C176 short the grid to the plate and the cathode for alternating currents.

295. Squelch Circuit (fig. 181)

a. With normal operation, the cathode potential of agc tube V108 is negative with respect to ground. This negative voltage is developed across grid-leak resistor R305 of squelch tube V125A and is fed through grid-current-limiting resistor R261 to the grid of the squelch tube. With this negative voltage applied to the grid, the tube plate current is cut off and the plate voltage becomes +150 volts. Through the action of the voltage divider consisting of resistors R263, R265, and R266, the grid of second triode V125B is held at approximately +20 volts. Tube V125B conducts heavily and relay K101 is operated. With the relay in the operated position, the —90-volt output of bias rectifier V112B is removed from the second-limiter grid, which permits normal operation of this stage. Under this condition, ground is connected to the junction of grid-leak resistor 179 and resistor R306 through contacts 4 and 5 of relay K101. Resistor R306 is the bias sup-

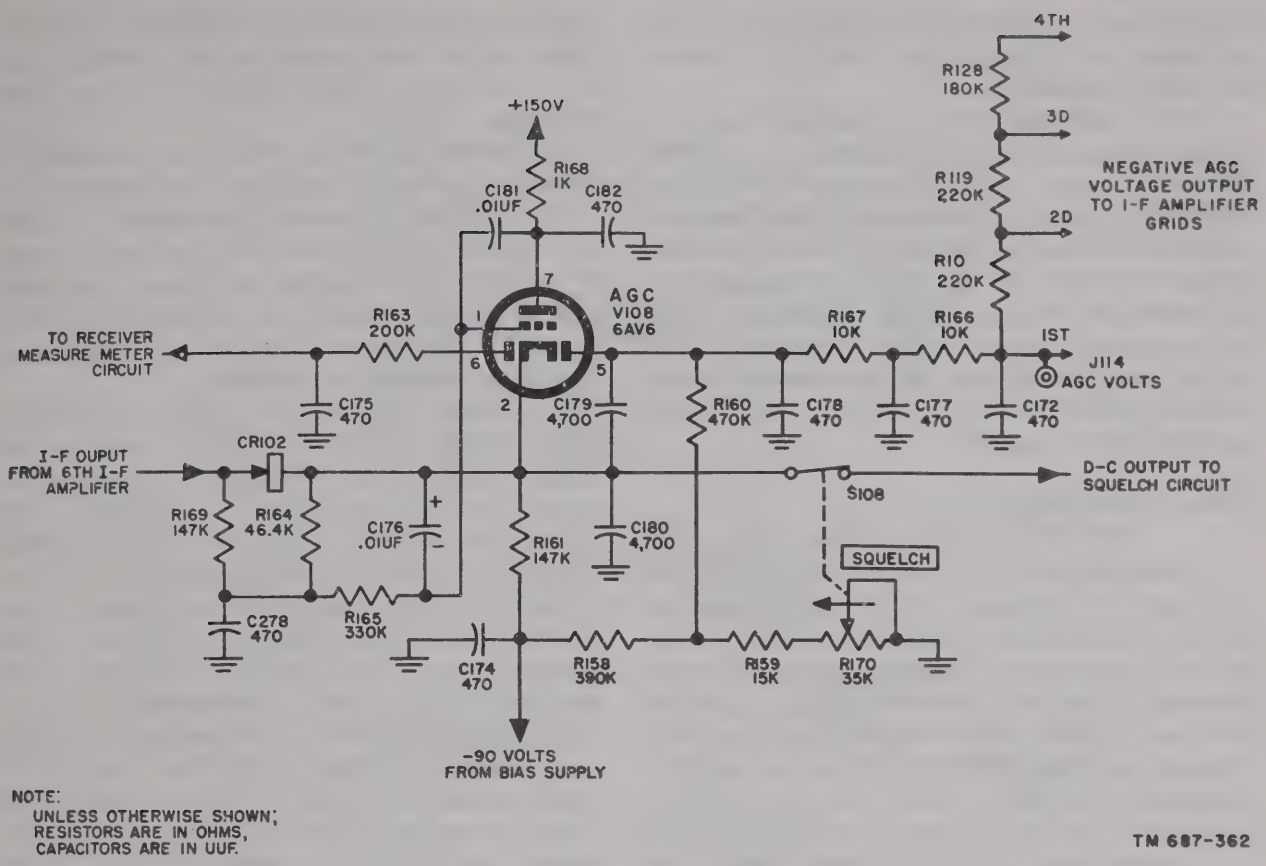

Figure 180. Agc circuit.

ply load when the bias voltage is removed from the second limiter.

b. When the incoming radio signal is reduced below a preset value, the cathode potential of the agc tube becomes positive with respect to ground (par. 294*c*). This causes tube V125A to conduct. The voltage on the plate of tube V125A will decrease with a corresponding decrease of positive voltage at the grid of tube V125B. Tube V125B draws less current, which will make the cathode less positive and, in turn, cause the first triode to draw more plate current. This will lower the plate voltage of first triode V125A still further. Because of this positive feedback, the squelch circuit changes very quickly from the condition where the first triode was drawing no plate current and the second triode was drawing approximately 10 ma, to a condition where the first triode is drawing plate current and the second triode is drawing so little current that the relay snaps into the released position.

c. With the relay released, the junction of resistors R179 and R306 is no longer grounded, and the —90 volts from the bias supply is applied to the grid of the second-limiter tube. This cuts off the tube and the receiver is squelched. The relay also completes the circuit through ground for ALARM lamp I 102 and the buzzer when the ALARM switch is in the NOR position. This causes lamp I 102 to light and the buzzer to sound. Failure of the +150-volt receiver supply will also cause relay K101 to be in the released position, and cause the ALARM lamp to light and the buzzer to sound. During a signal or 150-volt failure, the operator can silence the buzzer by operating the ALARM switch to the REV position.

d. With the incoming radio signal restored, the condition of the squelch tube is changed quickly back to that in which the first triode is again cut off and the second triode is conducting. Thus, relay K101 is operated, and the conditions described in *a* above for normal operation are again obtained. If the attendant has operated the ALARM switch to the REV posi-

tion during the rf signal failure, buzzer I 103 will sound and this indicates that the rf signal has been restored.

e. The cathodes of both sections of the squelch tube are connected together to ground through common cathode resistor R262. This resistor is bypassed by capacitor C256. Resistor R263 is the plate load for the first triode section. The grid current of the second triode section is limited by resistor R264. Capacitor C257 tends to maintain a constant dc voltage at the grid of tube V125B and thereby prevent a momentary reduction in rf carrier level from squelching the receiver.

296. Bias Supply
(fig. 182)

a. Bias Oscillator. The oscillator triode (pins 6, 7, and 8) employs a conventional Hartley circuit and is factory adjusted to oscillate at 505 kc. The resonant circuit consists of tapped inductor L134 and capacitor C211. Capacitor C213 and resistor R192 comprise a decoupling network for the regulated +150-volt supply. Capacitor C213 also provides the rf ground for the oscillator circuit. Capacitor C210 blocks the +150 volts from the grid. Resistor R189 is the oscillator grid leak.

b. Bias Rectifier. The 505-kc output of the oscillator is coupled through capacitor C212 to the grid and plate of the B section of V112. The plate and grid are connected together as a diode rectifier. In some bias supplies on Order No. 16811–Phila–51 and on sets bearing serial numbers 1 and above on Order No. 32146–Phila–51, the value of capacitor C211 and C212 has been changed to 110 $\mu\mu$f. The higher values are used to increase the output of tube V112. The rf component of the rectified voltage is filtered out by the multiple section filter consisting of choke coil L135, capacitors C214 and C215, and resistors R190 and R191. The heater is bypassed to ground by capacitor C209. Test jack J118 is used to checked the negative output of the bias supply.

297. Receiver MEASURE Meter Circuit
(fig. 183)

a. Position 1, OSC. When the MEASURE switch is in the OSC position, the negative side of the MEASURE meter is connected to the rf tuner local-oscillator grid circuit and the positive side of the meter is connected to ground. The voltage indicated on the meter is proportional to the local-oscillator grid current and is an indication of the operation of the local oscillator.

b. Position 2, MIX. When the MEASURE switch is in the MIX position, the negative side of the MEASURE meter is connected to the rf tuner mixer grid circuit and the positive side of the meter is connected to ground. The voltage indicated on the meter is proportional to the mixer grid current and is an indication of the drive supplied to the mixer.

c. Position 3, SIG LEV. When the MEASURE switch is in the SIG LEV position, the negative side of the MEASURE meter is connected to the plate (pin 6) of tube V108 through resistor R163 and the positive side of the meter is connected to ground. The rectified voltage applied to the meter is filtered by capacitor C175. The voltage indicated on the meter is proportional to the rectified and amplified output of the sixth if. amplifier and is an indication of the level of the received rf signal.

d. Position 4, 1ST LIM. When the MEASURE switch is in the 1ST LIM position, the negative side of the MEASURE meter is connected to one of the crystal rectifiers in the grid circuit of the first limiter through an RC filter and the positive side of the meter is connected to ground. The meter indication is proportional to the limiting action in the first limiter circuit and is an indication of the amount of drive supplied to the first limiter.

e. Position 5, 2ND LIM. When the MEASURE switch is in the 2ND LIM position, the negative side of the MEASURE meter is connected to one of the crystal rectifiers in the grid circuit of the second limiter through an RC filter and the positive side of the meter is connected to ground. The meter indication is proportional to the limiting action in the second limiter and is an indication of the amount of drive supplied to the second limiter.

f. Position 6, AFC BAL. When the MEASURE switch is in the AFC BAL position, the negative side of the MEASURE meter is connected through limiting resistor R197 and crystal rectifier CR107 to the output of the afc amplifiers. When the AFC DISABLE switch is operated and held in position, the input to the afc modulator is shorted to ground and the meter indication is proportional to the unbalance in the afc modulator. Thus, the AFC

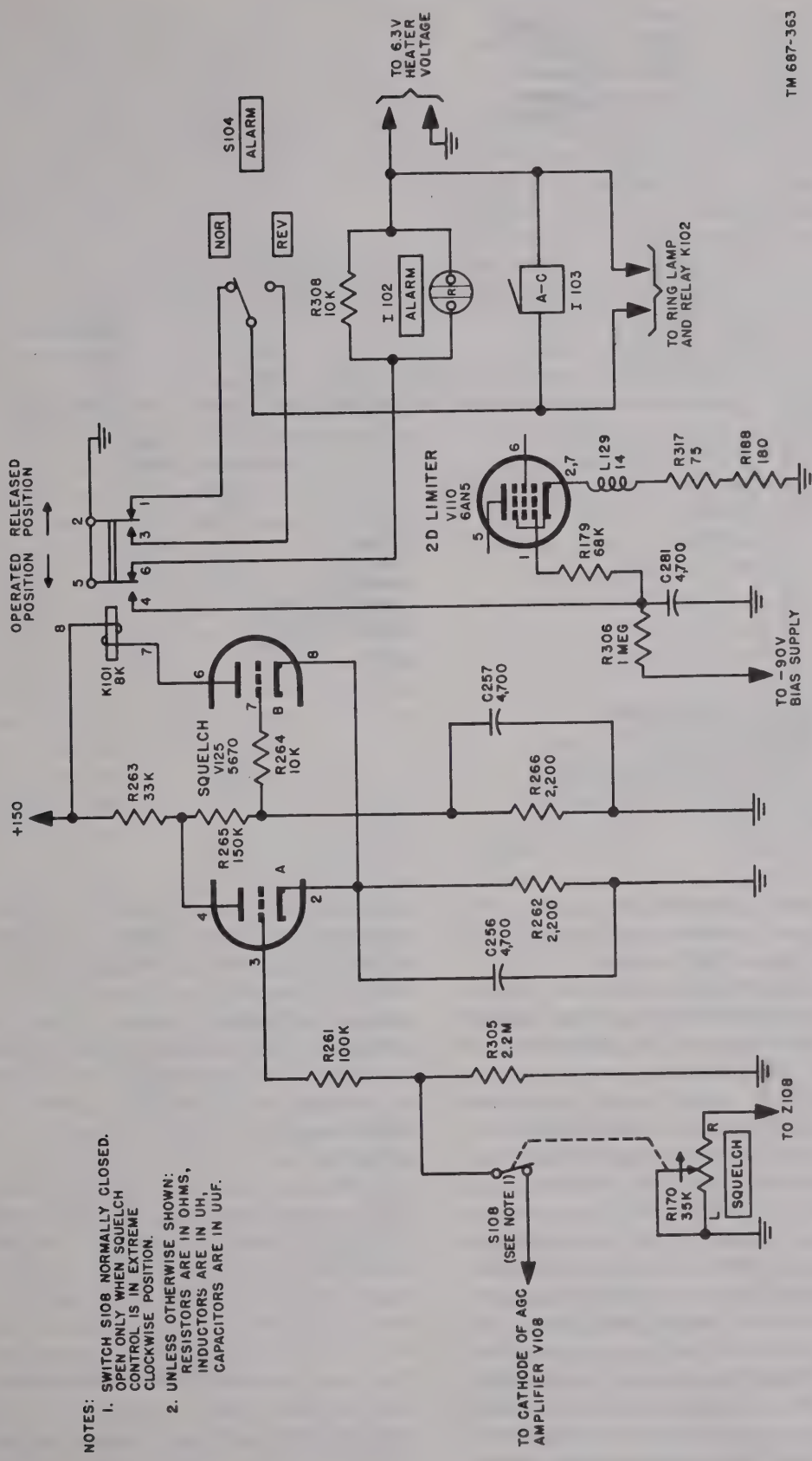

NOTES:
1. SWITCH S108 NORMALLY CLOSED. OPEN ONLY WHEN SQUELCH CONTROL IS IN EXTREME CLOCKWISE POSITION.
2. UNLESS OTHERWISE SHOWN: RESISTORS ARE IN OHMS, INDUCTORS ARE IN UH, CAPACITORS ARE IN UUF.

Figure 181. Squelch circuit.

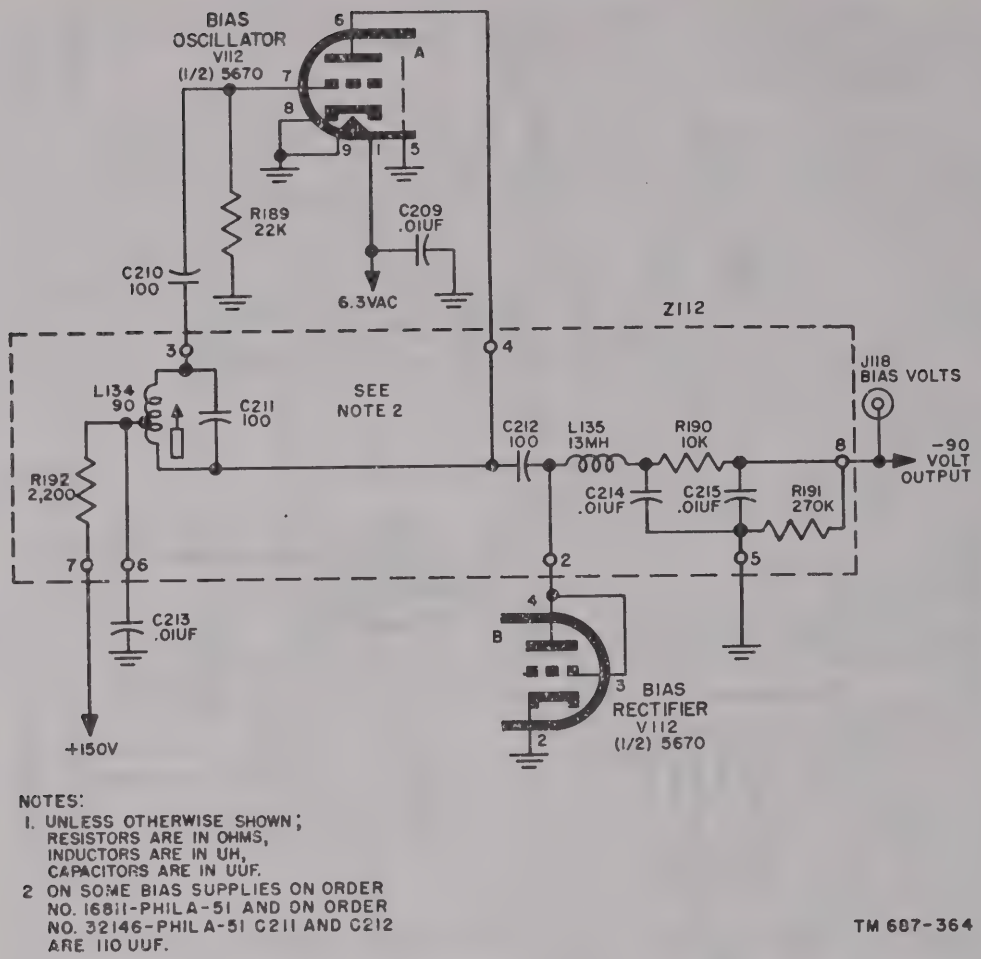

Figure 182. Bias supply.

BAL position is used when adjusting the AFC BAL control for a minimum indication (best balance) on the MEASURE meter.

g. Position 7, MTR CAL. When the receiver and transmitter MEASURE switches are in the MTR CAL positions, the adjusted 1-kc test signal from the transmitter is applied to the receiver MEASURE meter circuit to permit adjusting the overall gain of the meter amplifier of the receiver. The 1-kc signal is attenuated by the voltage divider consisting of resistors R298 and R257. The 1-kc voltage appearing across resistor R257 is applied to the grid of tube V124B, the meter amplifier. Cathode resistor R256 is unbypassed to stabilize the gain of the meter amplifier. The amplified output is developed across plate load resistor R258. The voltage across resistor R258 is coupled through capacitor C255 and positive half-cycles are shorted to ground through crystal rectifier CR108. The negative half-cycles of the amplified 1-kc signal are applied through multiplier resistors R259 and R260 to the MEASURE meter. Resistor R260, the ADJ METER control, is adjusted to produce an overall gain that is equal to the fixed attenuation of the voltage divider consisting of resistors R298 and R257. A 0-db indication on the receiver MEASURE meter is obtained when the ADJ METER control is adjusted correctly.

h. Position 8, 1KC OUT. When the MEASURE switch is in the 1KC OUT position, the MEASURE meter circuit is connected to measure the 1-kc output of the receiver. The voltage appearing at the output of the base-band amplifier is applied to 1-kc selective filter FL102 (fig. 276). Filter FL102 is a high-impedance filter and does not load down the receiver output. Resistor R309 provides the correct termination for the filter. The 1-kc signal selected by the filter is applied across the voltage di-

vider consisting of resistors R253 and R257 (fig. 183). The 1-kc voltage across resistor R257 is amplified by the meter amplifier, is rectified, and is applied to the MEASURE meter. The meter indication is proportional to the 1-kc output of the receiver base-band amplifier and permits the adjustment of the OUTPUT ADJ control.

i. Position 9, 68KC OUT. When the MEASURE switch is in the 68KC OUT position, the MEASURE meter circuit is connected to measure the 68-kc output of the receiver. The voltage appearing between terminal 1 of output transformer T103 and ground is applied to 68-kc selective filter FL101. Filter FL101 is a high-impedance filter and does not load down the receiver output. Fixed capacitor C252 and variable capacitor C253, the 68KC TUNE control, are shunted across the output of filter FL101 to permit tuning the filter to 68 kc. Resistors R254 and R304 form a voltage divider, which provides the correct termination for the filter and supplies a portion of the 68-kc output of the filter to the grid of 68-kc amplifier tube V124A. Tube V124A is a cathode follower with cathode resistor R255 as the load. Resistor R255 is connected to a negative potential (—12 volts) through the decoupling network consisting of resistor R293 and capacitor C275. The negative voltage counteracts the positive potential developed across resistor R255 to prevent the tube from being cut off. The 68-kc voltage at the cathode of tube V124A is coupled through capacitor C254 to the grid of the meter amplifier, is amplified, rectified, and applied to the MEASURE meter. The meter indication is proportional to the 68-kc output of the receiver and may be used for monitoring transmissions in an AN/TCC–7 communication system.

j. Position 10, B+. When the MEASURE switch is in the B+ position, the positive side of the MEASURE meter is connected through multiplier resistor R231 to the regulated +150-volt output of the receiver power supply, and the negative side of the meter is connected to ground. The meter indication provides a check of the regulated power supply.

298. Calibrator
(figs. 276 and 277)

a. Crystal Oscillator. Triode V101A is used as a tuned grid, tuned plate oscillator, with an 11-mc crystal functioning as the tuned grid circuit. Capacitor C108 shunts the crystal so that the grid circuit resonates at the correct frequency. The tuned plate circuit consists of variable inductor 107 and capacitor C110. The grid current flowing in the oscillator stage produces class C bias across resistors R101 and R102. The voltage drop across resistor R102 is proportional to the amplitude of oscillations and can be measured at test jack J111. Resistor R103 and capacitor C111 comprise a decoupling network for the plate voltage supply.

b. Harmonic Generator (For Receivers Procured on Order No. 16811–Phila–51). Some calibrator units have been modified. The schematic diagram for those procured on Order No. 16811–Phila–51 is shown in figure 276 (adjacent to connector J112). This diagram represents original sets on the above order number bearing serial numbers 1 through 48. In addition, other minor changes have been made on some calibrators in this group. These changes are included in the notes to figure 276. As shown in the diagram, the output of the oscillator is coupled through capacitor C112 to the grid of harmonic generator V101B. The plate load consists of inductor L108 shunted by resistor R105. The resistor broadens the band-pass characteristics of the circuit to pass the higher harmonics. The output of the amplifier is coupled through capacitor C288 to output jack J110. Resistor R321 provides an impedance match to cable W105. Resistor R104 is the grid leak for the harmonic generator. The plate voltage supply is filtered by capacitors C113 and C283. Capacitors C118 and C289 and inductors L110 and L138 form a filtering network for the heater supply. The connection of inductors L138 and L110 is made at pin 8 of connector P107 for wiring convenience.

c. Harmonic Generator (For Receivers Procured on Order No. 16811–Phila–51 (Serial Numbers 48 and Above), and Order No. 32146–Phila–51). The schematic diagram for calibrators procured on these order numbers is shown in the insert (fig. 276). Other minor changes which have been made in the above group are indicated by the notes to figure 276. As shown is the insert, the output of the oscillator is coupled through capacitor C112 to the grid of the amplifier stage. The positive peaks of the input cause the flow of grid current, which produces a bias voltage across resistor

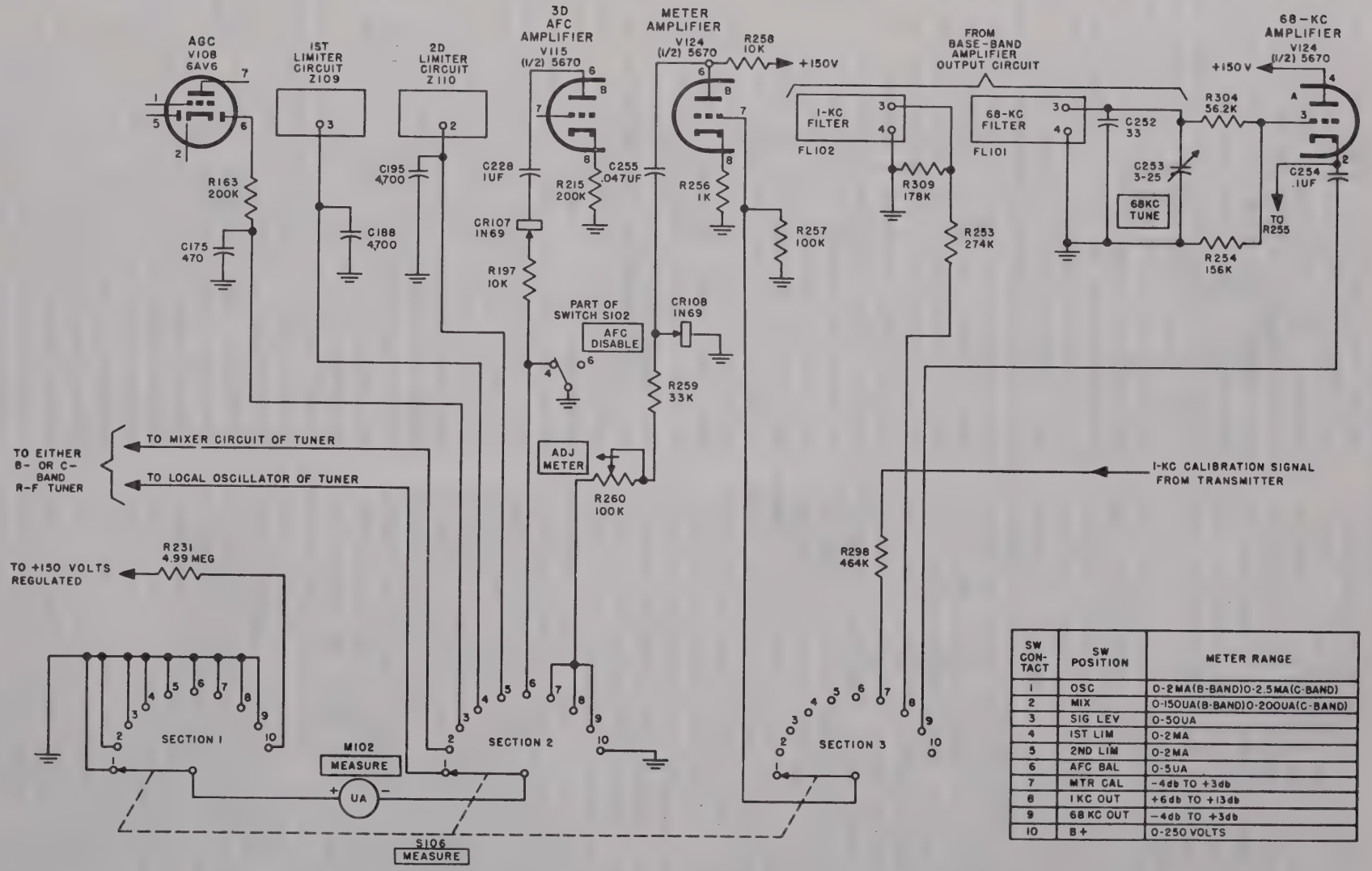

SW CONTACT	SW POSITION	METER RANGE
1	OSC	0-2MA(B-BAND)0-2.5MA(C-BAND)
2	MIX	0-150UA(B-BAND)0-200UA(C-BAND)
3	SIG LEV	0-50UA
4	IST LIM	0-2MA
5	2ND LIM	0-2MA
6	AFC BAL	0-5UA
7	MTR CAL	-4db TO +3db
8	1KC OUT	+6db TO +13db
9	68 KC OUT	-4db TO +3db
10	B+	0-250 VOLTS

NOTE:
UNLESS OTHERWISE SHOWN RESISTORS ARE IN OHMS, CAPACITORS ARE IN UUF.

TM687-365

Figure 183. Receiver MEASURE meter circuit.

R104. This causes tube V101B to operate class C. The tube's output is rich in the harmonics of 11 mc. Grid resistor R104 is connected to the ac heater-voltage line and the 60-cps variations from the line produce corresponding changes in the output waveform. Thus, the amplitude of the grid drive on the harmonic generator is varied at 60 cps, resulting in an equalizing effect on harmonic output levels. The plate load consists of resistor R105. The output of the amplifier is coupled through the RC network, consisting of capacitors C288 and C292 and resistors R321 and R323, to output jack J110. The RC network forms a high-pass filter and provides an impedance match to cable W105, which connects the output of the calibrator to CAL OUT jack J109. The plate voltage supply is filtered by capacitors C283, C290, and C293, and inductor L139. Capacitors C118, C289, and C291, and inductors L110 and L138 form a filtering network for the heater supply. The connection of inductors L138 and L110 is made at pin 8 of connector P107 for wiring convenience.

299. Receiver Power Supply

a. Input Circuits.

(1) *Interlock circuit.* The ac output of the autotransformer is applied through POWER AC connector J121, through circuit breaker CB101, which is the POWER switch, and through an interlock circuit to primary winding 1–2 of power transformer T102. POWER lamp I 101 (fig. 276) is connected across the filament winding and lights when power is applied to the power transformer. Removal of the receiver rf tuner or of any of the receiver plug-in assemblies from the receiver opens the interlock circuit and thereby opens the connection to terminal 1 of the power transformer (fig. 184). This safety feature removes all voltages from the connectors of the receiver and thus prevents injury to personnel. A diagram of the interlock circuit is shown in figure 184.

(2) *Rectifier* (fig. 276). Two full-wave rectifier tubes, V116 and V117, are connected in parallel in a conventional full-wave rectifier circuit. One plate from each rectifier tube is connected to terminal 3 of the high-voltage secondary winding of transformer T102 and the other plates are connected to terminal 5. Filament voltage for the rectifier tubes is supplied from winding 9–10 of the power transformer. The ripple present in the rectifier output is filtered by capacitors C230, C231, and C232, which are connected in parallel with bleeder resistor R322. The rectifier voltage can be measured at test jack J122. The filtered rectifier output is applied to the voltage-regulator circuit.

(3) *Blower motor.* When the temperature in the power supply exceeds 80° F, thermostat S103 closes and the input ac voltage is applied through connectors J120 and P112 to blower motor B101. Capacitor C229 shifts the phase of the voltage applied to the shunt field.

b. Voltage-Regulator Circuit.

(1) To explain the action of the voltage-regulator circuit (fig. 185), assume that the output voltage of the power supply tends to increase due to an increase in the ac line voltage or to a decrease in load current. The total amount of change in the output voltage appears across resistor R230 because the voltage drop across voltage-regulator tube V120 is constant. Since the cathode of first dc amplifier tube V119A is connected to resistor R230, it also becomes more positive by the same amount. The grid of tube V119A is connected to a voltage-divider network consisting of variable resistor R226 and fixed resistors R225 and R227. Only a small portion of the total positive increase in the output voltage appears on the grid of this tube. Therefore, with an increase in the output voltage, the grid-to-cathode voltage of tube V119A will become less positive with a resulting decrease of plate current. This decreased plate current will decrease the voltage drop across plate load resistor R224, thereby increasing the plate voltage of tube V119A. Capacitor C234 is con-

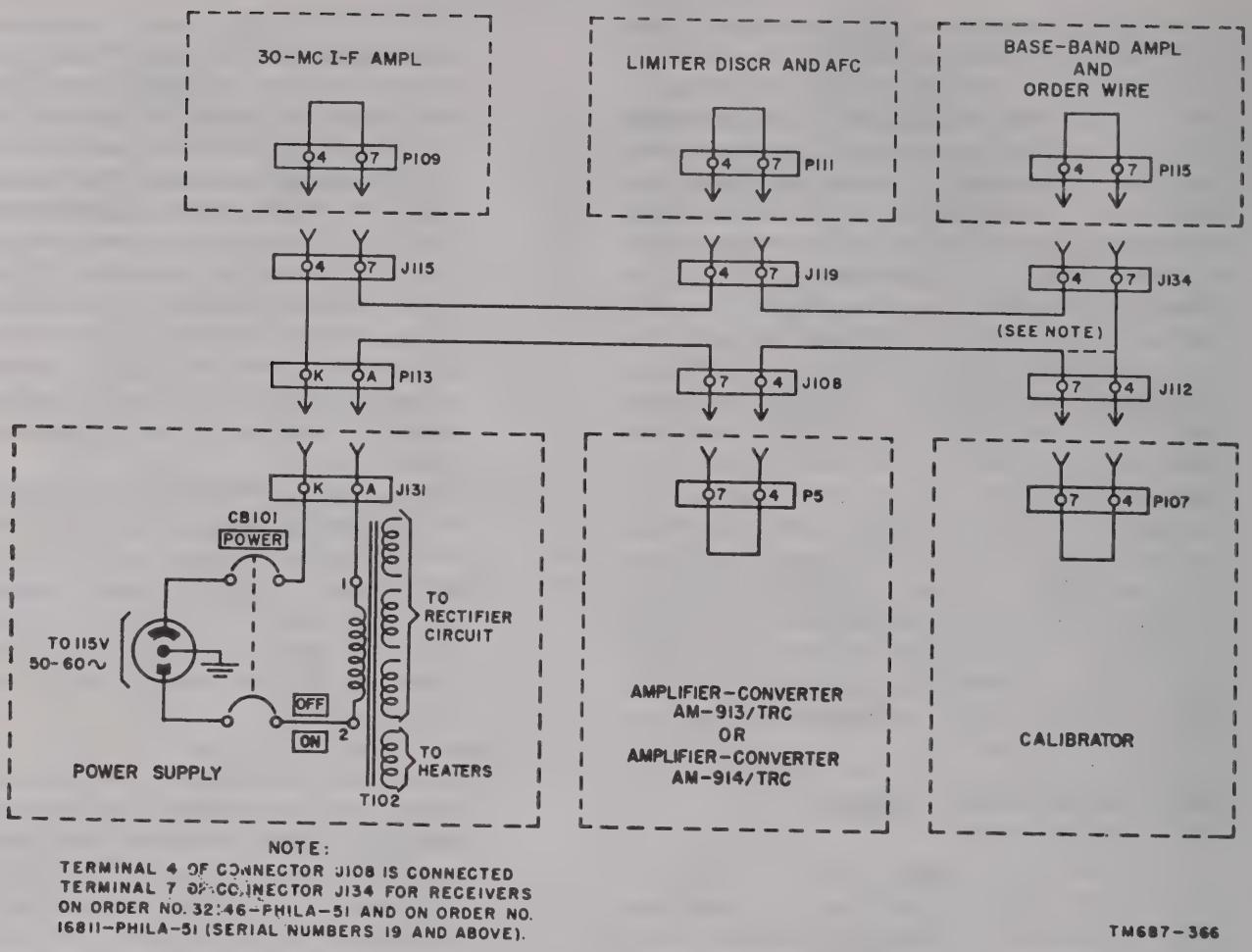

Figure 184. Receiver interlock circuit.

nected from the grid to ground and makes the grid-to-cathode voltage more sensitive to rapid changes in the output voltage than to gradual changes.

(2) The cathode of tube V119B of the second stage of the dc amplifier is connected to the junction of resistors R228 and R229, which form a voltage-divider network that is connected across voltage-regulator tube V120. Thus, the cathode of the second stage is at a higher fixed positive potential than the cathode of the first stage. This permits the plate of the A section with its high positive potential ((1) above) to be coupled directly to the grid of the B section. With the output voltage of the power supply tending to become more positive, the cathode potential of the V119B will also increase by the total amount of change occurring across resistor R230. However, the amplifier change appearing in the output of tube V119A is coupled directly to the grid of tube V119B and thus will cause the grid-to-cathode potential of V119B to become more positive. This will increase the plate current of V119B. Consequently, the voltage drop across plate load resistor R217 will also increase and the plate potential of V119B will decrease.

(3) This decrease of plate voltage will cause the grids of the series-regulator tube to become less positive. These grids are connected to the plate of tube V119B through parasitic-suppressor resistors R218 and R221. The resulting decrease of grid-to-cathode voltage of series-regulator tube V118 will result in an increased voltage

drop across this tube. Since this tube is in series with the load, the output voltage across the load will decrease. Thus, the tendency of the output voltage to increase has been automatically adjusted by the increase in the voltage drop across the series tube. The output voltage will remain nearly constant. The time-lag of the electronic-regulator circuit is negligible and the sequence of events described may be considered instantaneous.

c. Other Elements. Capacitor C235 which shunts the voltage regulator prevents internal oscillations from affecting the voltage drop across the tube. Resistor R222 shunts a portion of the load current from tube V118 to increase the load current capacity of the circuit. Cathode resistors R219 and R220 equalize the load between the two sections of the series tube by increasing the bias on the section tending to pass more of the load current. Resistor R223 and capacitor C233 in the plate circuit of V119A form a filter for suppressing low-frequency parasitic oscillations. The output voltage of the power supply is filtered by capacitor C237.

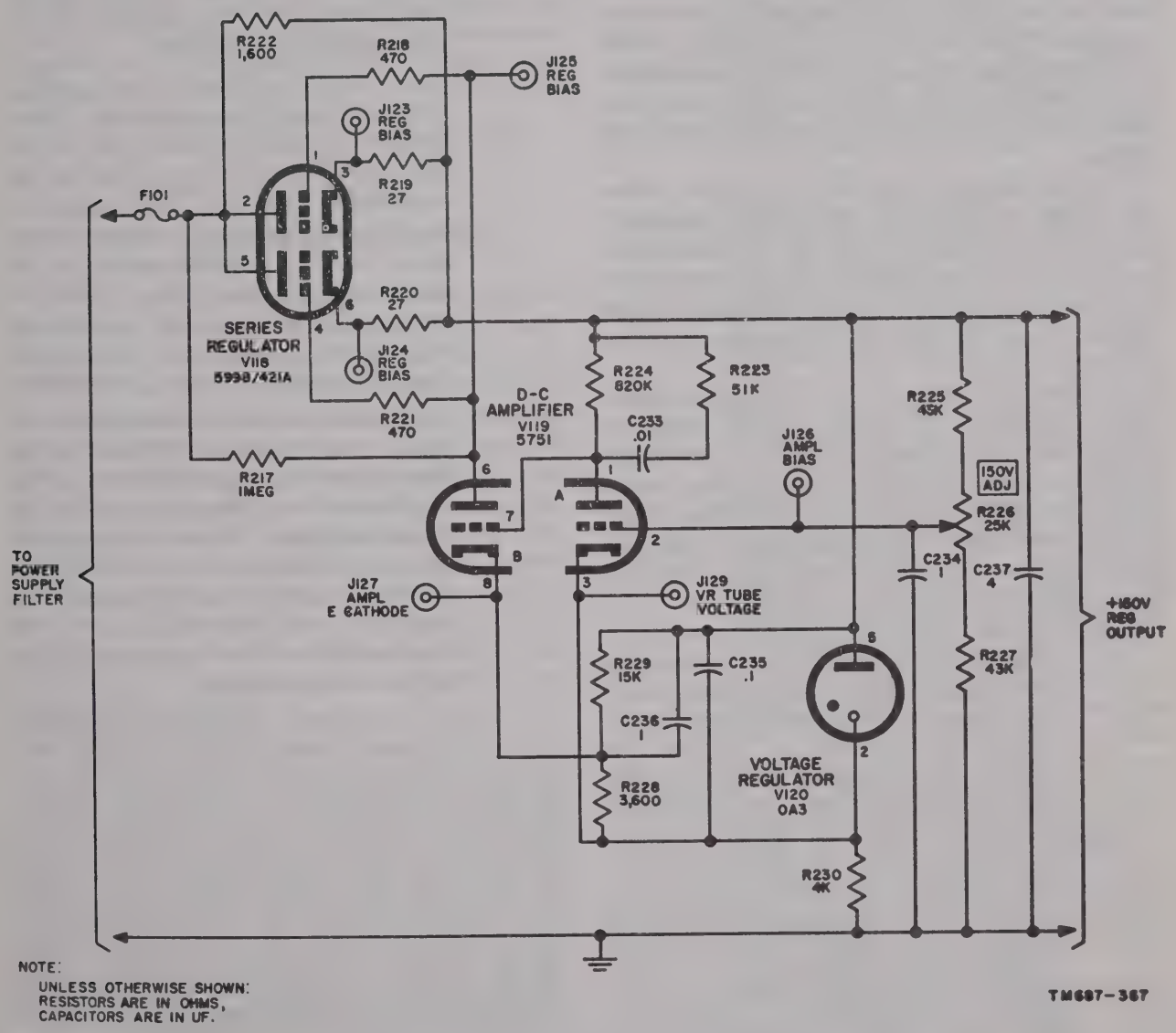

Figure 185. Receiver voltage-regulator circuit.

Section IV. THEORY OF ORDER-WIRE AND SIGNALING CIRCUITS

300. Functioning of Order-wire Circuits (fig. 186)

a. General. The main function of the order-wire circuit is to furnish a voice-frequency channel that permits the attendant at the radio set to communicate with the attendants at other stations of the system. This voice-frequency channel is used for installation and maintenance of the system. When RING-TALK switch S105 is in the TALK position, the order-wire circuit is operative and the 1,600-cps oscillator is inoperative.

b. Limiter Circuit. Voice signals from the transmitter unit of Handset H–90/U are applied to the limiter circuit consisting of crystal rectifiers CR112 and CR113. The peaks of the voice signals are limited to prevent overloading the amplifier circuits in the radio receiver and transmitter, to which the voice signals will be applied.

c. Microphone Amplifier. The limited voice signals are applied to the microphone amplifier, which employs tube V129B in a cathode-follower circuit. The function of the microphone amplifier is to match the high impedance of the limiter circuit to the low impedance of low-pass filter FL103.

d. Low-pass Filter FL103. The voice signals from the cathode of the microphone amplifier are applied to low-pass filter FL103. This filter limits the voice-frequency band to the range from 250 to 3,000 cps, thereby preventing interference with traffic communications. The output of the low-pass filter is applied to both the radio transmitter and the radio receiver.

(1) In the radio transmitter, the voice signals are applied to the input circuits (par. 188). The fm wave from the transmitter carries the voice intelligence to the distant AN/TRC–24 and to all subsequent stations in the cable-to-air direction of transmission.

(2) In the radio receiver, the voice signals are applied to the input of the base-band amplifier (par. 262). The output of the third base-band amplifier is applied to the REC pair of CABLE CONNECTORS terminals and transmitted over spiral-four cable to all stations in the air-to-cable direction.

e. Attenuator Network.

(1) Received voice signals from attendants at stations in the cable side of the system are applied to the XMTG pair of CABLE CONNECTIONS terminals on the receiver. These received voice signals pass through the interconnecting cable to the transmitter and the input circuits. From the input circuits, the input signals are applied to one side of a resistive attenuator network. The input signals are applied also to the transmitter measuring circuits and are transmitted to the distant AN/TRC–24 and to the remainder of the system.

(2) Voice signals originating at a station in the air side of the system are picked up by the radio receiver, are amplified, demodulated, and applied to the base-band amplifier. The output of the base-band amplifier is transmitted by spiral-four cable to stations in the cable side of the system. Another output of the base-band amplifier is applied to the other side of the resistive attenuator network ((1) above).

(3) The attenuator network has two functions. It serves as a combining circuit that applies the signals from both the transmitter and the receiver to the phone amplifier. It serves also as an attenuator that reduces to a negligible level the signal feeding through the network from the receiver to the transmitter and vice versa and thereby prevents singing.

f. Phone Amplifiers. The phone amplifiers, tubes V126A and V126B, provide sufficient gain in the order-wire range of frequencies to compensate for the loss in the attenuating network. The frequency response of the phone amplifiers is limited to the order-wire frequency range to reduce the level of base-band traffic signals that are applied from the transmitter and receiver through the attenuator network to the phone amplifiers. One output of the phone amplifiers is applied through low-pass filter FL104 to the handset receiver. Another output of the

phone amplifiers is applied to the ringer amplifier (par. 301).

g. Low-pass Filter FL104. The lowest frequency traffic signals are audible and would cause interference with order-wire transmissions. Low-pass filter FL104 prevents this interference by rejecting all signals above 3,000 cps. The output of this low-pass filter is applied to the handset receiver.

h. Sidetone Circuit. Voice signals applied to the handset transmitter are heard in the handset receiver. This is known as sidetone and indicates to the speaker that the circuit is operative. Sidetone is provided by the circuits described in *b* through *g* above. The input voice signals pass through the limiter, the microphone amplifier, low-pass filter FL103, the receiver base-band amplifier, the attenuator network, the phone amplifiers, and low-pass filter FL104 to the receiver of the attendant's handset.

Figure 186. Order-wire and signaling circuits, block diagram.

(Contained in separate envelope.)

301. Functioning of Signaling Circuits (fig. 186)

a. General. The signaling circuits function either as a ringer or as an oscillator. As a ringer, the circuits ring the buzzer and light the RING lamp in response to a 1,600-cps ringing signal that is transmitted from any of the other stations in the system. These audible and visual indications attract the attention of the attendant to the reception of the ringing signal. As an oscillator, the circuits generate a 1,600-cps ringing signal that is transmitted to other stations in the system. The circuits operate as a ringer when the RING-TALK switch is in the normal TALK position and as an oscillator when the switch is held in the nonlocking RING position.

b. Ringer Circuit.

(1) *Input path.* Ringing signals originating at a station in one side of the system pass through either the transmitter or receiver of the radio set and are transmitted to the other side of the system. The signals from the air side of the system pass through the receiver circuits and are fed from the output of the receiver base-band amplifier through the attenuator network and the phone amplifiers to the ringer amplifier. Ringing signals from the cable side of the system pass through the transmitter circuits and are fed from the transmitter input circuits through the attenuator network and the phone amplifiers to the ringer amplifier.

(2) *Ringer amplifier.* Ringer amplifier V127A applies the ringing signal to both the 1,000-cps rectifier and the 1,600-cps rectifier.

(3) *1,600-cps rectifier.* The output of the ringer amplifier is applied through a tuned circuit, which selects 1,600-cps signals, to tube V128B. This tube is a diode-connected triode which rectifies the 1,600-cps signal and produces a negative output voltage.

(4) *1,000-cps rectifier.* In the 1,000-cps rectifier circuit, the signals from the ringer amplifier are applied to a tuned circuit that selects signals in a narrow frequency band centered around 1,000 cps. The selected signals are rectified by V128A producing a positive output voltage that is applied in series with the negative voltage from the 1,600-cps rectifier to the ringer.

(5) *Safeguard against false ringing.* False ringing can be caused by 1,600-cps signals other than ringing signals. The 1,000-cps rectifier provides a safeguard against such false ringing. When no ringing signal is received, the positive output of the 1,000-cps rectifier is larger than the negative output of the 1,600-cps rectifier. The 1,000-cps components of voice signals, for example, are normally larger than 1,600-cps components, and the positive output voltage of 1,000-cps rectifier will be larger than the negative output of the 1,600-cps rectifier. A time-delay circuit requires that a 1,600-cps signal be applied for at least 2/10 second so that the combined output voltage of the rectifiers reverses polarity. This prevents a large 1,600-cps voice component of short duration from causing false ringing.

(6) *Ringer.* Ringer tube V129A is an amplifier circuit with a relay as the

plate load. When no ringing signal is received, the input to the grid of the ringer is a positive voltage, tube V129A conducts heavily, and the relay operates. This is the normal condition of the relay. With the relay energized, the circuit to the buzzer and RING lamp is open. When a ringing signal is received, the input voltage to the ringer is negative, the tube cuts off, and the relay releases to close the circuit to the buzzer and RING lamp. The lighting of the RING lamp and the sounding of the buzzer indicates reception of the ringing signal.

c. Oscillator. When the RING-TALK switch is held in the RING position, +150 volts dc is applied to 1,600-cps oscillator V127B and is disconnected from the phone amplifiers.

(1) *1,600-cps oscillator.* Tube V127B and ringer amplifier V127A function as a two-stage oscillator that generates the 1,600-cps ringing signal. The 1,600-cps tuned circuit of the 1,600-cps rectifier serves as the frequency-determining portion of the oscillator. The 1,600-cps components are amplified by the ringer amplifier and selected by the 1,600-cps tuned circuit. A portion of the tuned circuit voltage is applied to the grid of tube V127B which is a cathode follower. The output of the cathode follower is applied both to the ringer amplifier as feedback and to the microphone amplifier as the oscillator output.

(2) *Output path.* The 1,600-cps output of the oscillator passes through the microphone amplifier and low-pass filter FL103 and is applied both to the receiver base-band amplifier and to the transmitter input circuits. Thus, the ringing signal is transmitted to both sides of the system simultaneously.

(3) *Remainder of signaling circuits.* The 1,000-cps and 1,600-cps rectifiers and the ringer function in the same manner as when the circuits are operating to receive a ringing signal. The voltage across the 1,600-cps tuned circuit is rectified and the negative voltage output is applied to and cuts off the ringer. The relay releases and the circuit to the RING lamp and buzzer is closed. The resulting visual and audible indications signify proper operation of the 1,600-cps oscillator.

302. Order-wire Transmission Circuit (fig. 187)

The order-wire transmission circuit, which consists of the transmitter of Handset H–90/U, a limiter circuit, the microphone amplifier, and low-pass filter FL103, is described briefly in paragraph 300*b* through *d*. The detailed analysis of the order-wire transmission circuit is given in *a* through *c* below.

a. Input to Order-Wire Transmission Circuit.

(1) When RING-TALK switch S105 is in the TALK position, approximately —8 volts dc is applied from the decoupling filter consisting of resistor R293 and capacitor C275. The circuit is completed through dropping resistor R290 and the parallel-connected unput windings 1–2 and 3–4 of transformer T107 to one terminal of the handset transmitter. Operation of the press-to-talk switch of the handset transmitter thereby completes the circuit to ground and energizes the handset transmitter.

(2) Talking into the handset produces resistance variations in the button of the transmitter. This produces current variations which correspond to the voice input. These current variations induce a voice-frequency voltage in secondary winding 5–6 of transformer T107.

b. Limiter Circuit. A peak-limiter circuit consisting of crystal rectifiers CR112 and CR113 and resistors R291 and R292 is connected across secondary winding 5–6 of transformer T107. The junction point of crystal rectifier CR112 and resistor R291 is grounded and a negative bias of approximately 8 volts from the decoupling filter is applied to the junction of crystal rectifier CR113 and resistor R292. The polarities of the rectifiers are such that they present a high impedance to the bias voltage. Resistors R291 and R292 form a voltage divider that applies half of the bias voltage (—4V) to terminal 5 of the input transformer

and also through winding 5–6 to the junction between crystal rectifiers CR112 and CR113. Thus, a bias of approximately 4 volts is applied across each of the rectifiers.

(1) When the peak signal voltage does not exceed 4 volts, neither one of the rectifiers conducts and the limiter circuit does not affect the signal.

(2) When the peak signal voltage exceeds 4 volts, the positive peaks will cause crystal rectifier CR112 to conduct, thereby limiting to 4 volts the positive voltage which can be developed across winding 5–6. Similarly, negative peaks are limited to crystal rectifier CR113.

c. Microphone Amplifier. The output signal from the limiter circuit is coupled through capacitor C277 and is developed across grid resistor R294. The voltage across resistor R294 is applied to the grid of microphone amplifier tube V129B, which is connected as a cathode follower. The cathode follower provides an impedance match between the relatively high impedance of the limiter circuit and the 600-ohm impedance of low-pass filter FL103. Resistor R295 provides the proper termination for the low-pass filter. The output of the filter is applied through resistor R238 to the cathode of the first base-band amplifier of the radio receiver, and also through resistor R102, in the radio transmitter (fig. 268), to the input circuits of the transmitter base-band amplifiers. Resistors R238 and R102 attenuate the order-wire signals and reduce coupling and, therefore, cross talk between the radio receiver and transmitter by more than 40 db.

303. Order-wire Receiving Circuit (fig. 188)

The order-wire receiving circuit consists of an attenuator network, the phone amplifiers low-pass filter FL104, and the receiver of Handset H–90/U (par. 300). A detailed de-

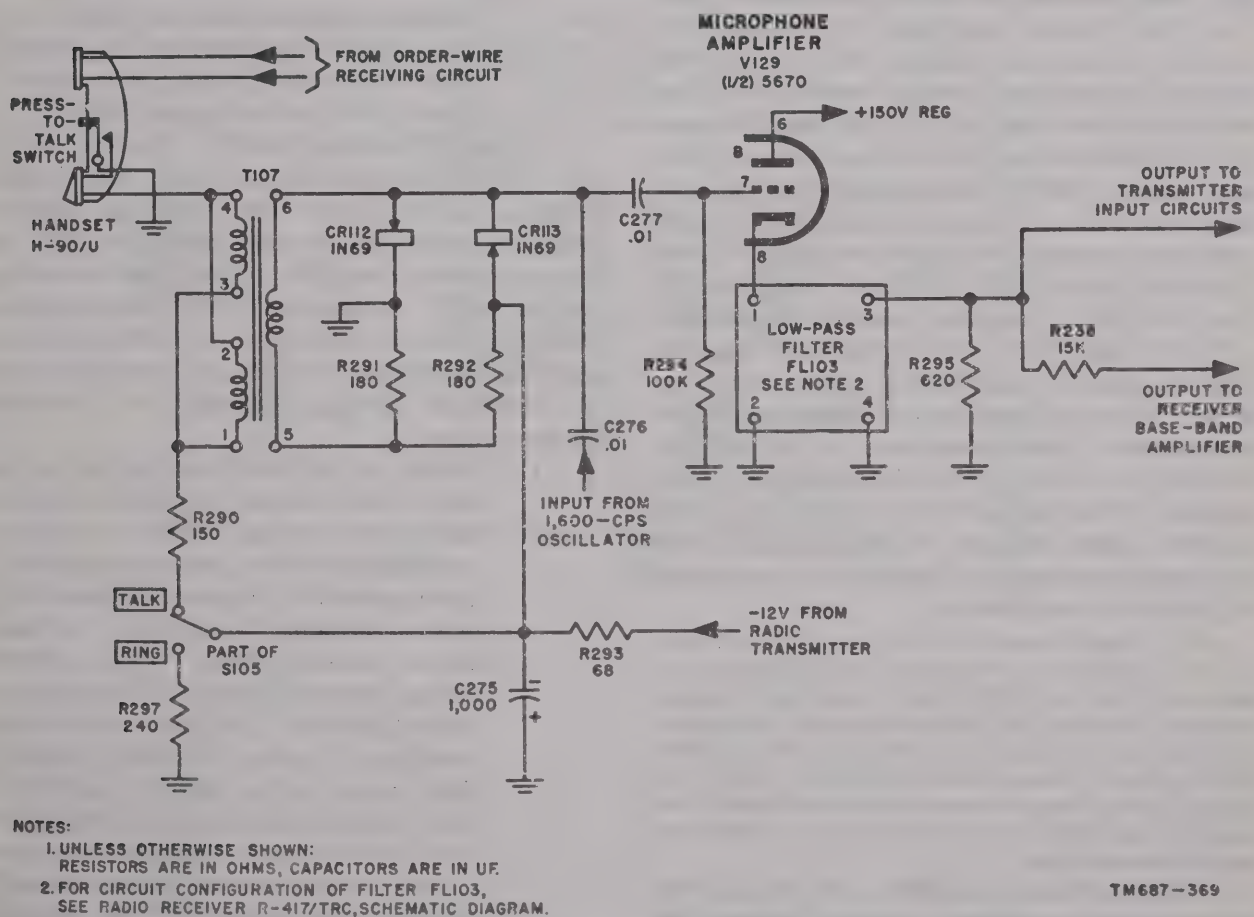

Figure 187. Order-wire transmission circuit, simplified schematic diagram.

scription of these circuits is given in *a* through *d* below.

a. Attenuator Network. The input signal from the cable-to-air direction of transmission is applied from the transmitter input circuits through resistor R267 and is developed across the parallel combination of capacitor C258 and grid resistor R271. The input signal from the air-to-cable direction is coupled from the plate of the third base-band amplifier through blocking capacitor C250 and a two-section attenuator consisting of resistors R268, R269, and R270 and is developed across the parallel combination of capacitor C258 and resistor R271. Capacitor C258 reduces the high-frequency response of the circuit so that the phone amplifier circuit has a frequency range approximately that of the order-wire (250 to 3,000 cps.).

Note. The value of resistor R267 has been increased from 1 to 1.2 megohms for receivers bearing serial numbers 5 and above on Order No. 16811–Phila–51. This change, however, does not include receivers on Order No. 32146–Phila–51. The higher value of resistance is used to reduce the input to the grid of V126B.

b. First Phone Amplifier. The voltage developed across grid resistor R271 is applied through parasitic-suppressor resistor R307 to the grid of the first phone amplifier. The amplified signal voltage is developed across plate load resistor R273. Degeneration to prevent distortion on some receivers (see note below) and bias voltage for the operation of tube V126A are provided by cathode resistor R272. The first phone amplifier consists of one-half of twin-triode V126. The other half of tube V126 is used in the second phone amplifier circuit. Plate voltage for both phone amplifiers is provided through contacts of the RING-TALK switch when the switch is in the TALK position. When the switch is held in the RING position, plate voltage is disconnected from the phone amplifiers and the order-wire receiving circuit is inoperative.

Note. Circuit elements of the first phone amplifier on some receivers on Order No. 16811–Phila–51 and those on Order No. 32146–Phila–51 have been changed. Resistors R271 and R273 were changed to 150,000 and 3,600 ohms, respectively. Also cathode bypass capacitor C295 (10 $\mu\mu$f) shunts cathode resistor R272. The changes in the above resistors and the addition of the capacitor were made to reduce microphonic noise and hum in the amplifiers.

c. Second Phone Amplifier. The output from the first phone amplifier is coupled through capacitor C260 and is developed across the parallel combination of capacitor C261 and grid resistor R274. Capacitor C261 shunts the grid resistor and reduces the level of the base-band traffic signals that are applied together with order-wire signals to the phone amplifier circuit. The voltage developed across resistor R274 is applied to the grid of the second phone amplifier. The amplified output of tube V126B is developed across high-impedance winding 5–6 of output transformer T104.

(1) The stepped-down voltage developed in secondary winding 1–2 is applied to low-pass filter FL104. The filter reduces interference from traffic signals in the frequency range from 4,000 to 20,000 cps. The order-wire output signals of the filter are applied to the handset receiver through the impedance-matching network consisting of resistors R301 and R302.

(2) The voltage developed across winding 5–6 of the output transformer is applied to the grid of the ringer amplifier through coupling capacitor C263.

(3) Bias for the operation of the second phone amplifier is developed across resistor R275 and capacitor C262.

d. Crystal Rectifier CR111. Crystal rectifier CR111 prevents signals from the second phone amplifier (order-wire receiving circuit) from being coupled through capacitor C279 to the microphone amplifier (order-wire transmission circuit). Capacitor C279 also supplies feedback from the cathode of the 1,600-cps oscillator to the grid of the ringer amplifier when the signaling circuits generate the 1,600-cps ringing signal.

(1) When the RING-TALK switch is in the TALK position, the phone amplifiers are operating, but B+ voltage is not applied to the 1,600-cps oscillator. Tube current of the second phone amplifier develops a positive voltage across resistor R275. The positive voltage across resistor R275 maintains crystal rectifier CR111 in a conducting condition, thereby shunting resistor R280, which is the cathode resistor of the 1,600-cps oscillator, with capacitor C262. This holds the cathode of the 1,600-cps oscillator at ac ground and prevents the output of the second phone amplifier from being coupled to

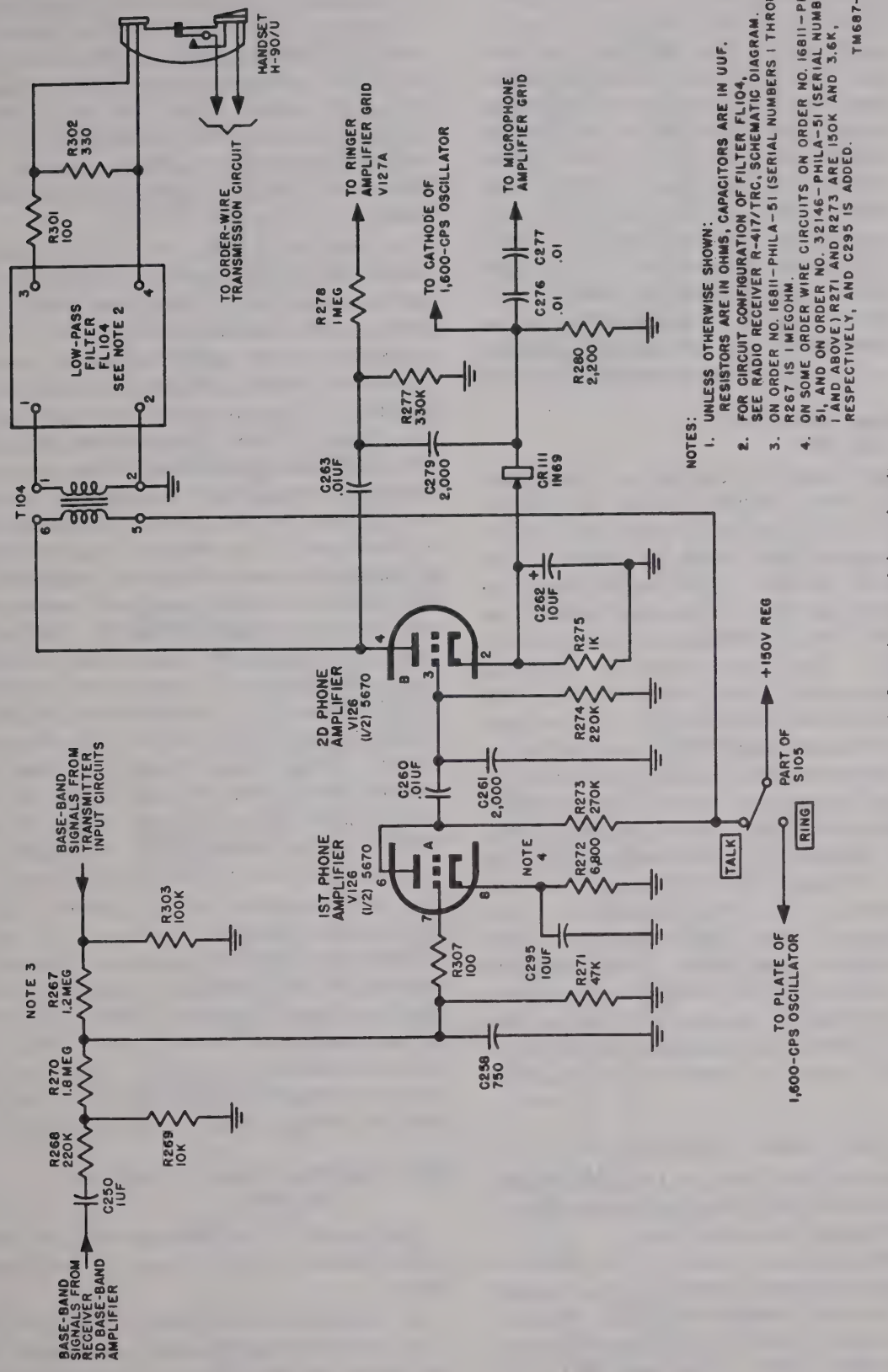

Figure 188. Order-wire receiving circuit.

the grid of the microphone amplifier.

(2) When the RING-TALK switch is held in the RING position, plate voltage is connected to the 1,600-cps oscillator and is disconnected from the phone amplifiers. Conduction occurs through cathode resistor R280 but not through cathode resistor R275. The positive voltage developed across R280 maintains crystal rectifier CR111 in a nonconducting condition, thereby removing the shunting effect of capacitor C262. This permits a 1,600-cps oscillator signal to be developed across resistor R280 and this signal is applied to the order-wire transmission circuit.

304. Ringer Amplifier (fig. 189)

The ringer amplifier receives an output from the second phone amplifier when the RING-TALK switch is in the TALK position and from the 1,600-cps oscillator when the switch is held in the RING position. The output from the second phone amplifier is coupled through capacitor C263 and is developed across grid resistor R277. The output from the 1,600-cps oscillator is coupled through capacitor C279 and is developed across resistor R277. The voltage developed across resistor R277 is applied to the grid of ringer amplifier V127A through grid-current-limiting resistor R278. The amplified output of tube V127A is developed across low-impedance windings 1–2 of transformers T105 and T106. Transformer T106 couples the amplifier output to the 1,600-cps rectifier (par. 305) and transformer T105 couples it to the 1,000-cps rectifier (par. 306). Plate voltage is supplied to tube V127A through a decoupling network consisting of resistor R281 and capacitor C272. Cathode bias is developed across resistor R279, which is bypassed by capacitor C280.

305. Rectifier Circuit, 1,600-cps

The circuit of the 1,600-cps rectifier consists of the 1,600-cps tuned circuit, a limiter circuit, and the 1,600-cps detector circuit.

a. 1,600-cps Tuned Circuit. The input to the 1,600-cps rectifier is induced in secondary winding 3–4–5 of transformer T106. The secondary winding is tuned to 1,600 cps by capacitors C267, C268, C269, C270, and C271. Capacitor C268, the 1600~TUNE control, adjusts the resonant frequency of the tuned circuit to 1,600 cps. The output from this tuned circuit is taken from terminal 4 of transformer T106 and is developed across the voltage divider consisting of resistors R282, R283, and R300. The voltage across resistors R283 and R300 is applied to the cathode of 1,600-cps rectifier V128B. This tube is half of a twin triode connected to function as a diode.

b. Limiter Circuit. A limiter circuit, consisting of crystal rectifiers CR109 and CR110 and resistors R325, R287, and R288, is connected to the cathode of tube V128B. This circuit shorts out the negative peaks of the output developed by the 1,600-cps tuned circuit, thus limiting the negative peaks applied to the cathode of tube V128B. This limiting of the negative peaks prevents unusually high inputs to the signaling circuits from causing false ringing by overcoming the effect of the time-delay circuit in the input of the ringer. Register R325 is connected in series with crystal rectifiers CR109 and CR110 on radio receivers bearing serial numbers 48 and above (Order No. 16811–Phila–51). This change also applies to receivers bearing serial numbers 1 and above (Order No. 32146–Phila–51). The addition of the resistor decreases the limiting action of the crystal rectifiers. Thus, a larger negative voltage is developed across resistor R289 to cut off ringer tube V129A. The —12-volt supply voltage is divided across resistors R287 and R288 to provide negative bias for the limiter circuit.

c. 1,600-cps Rectifier. The output of the limiter circuit is applied to the cathode of tube V128B, which rectifies the signals. The rectified signals are then filtered by capacitor C274 and developed across resistor R289. The voltage across resistor R289 and capacitor C274 is negative with respect to ground. This negative dc voltage is added in series with the positive dc voltage produced by the 1,000-cps rectifier.

306. Rectifier Circuit, 1,000-cps (fig. 189)

The circuit of the 1,000-cps rectifier consists of the 1,000-cps tuned circuit and 1,000-cps rectifier.

a. 1,000-cps Tuned Circuit. The input to the 1,000-cps circuit is induced in secondary winding 3–4–5 of transformer T105. The secondary

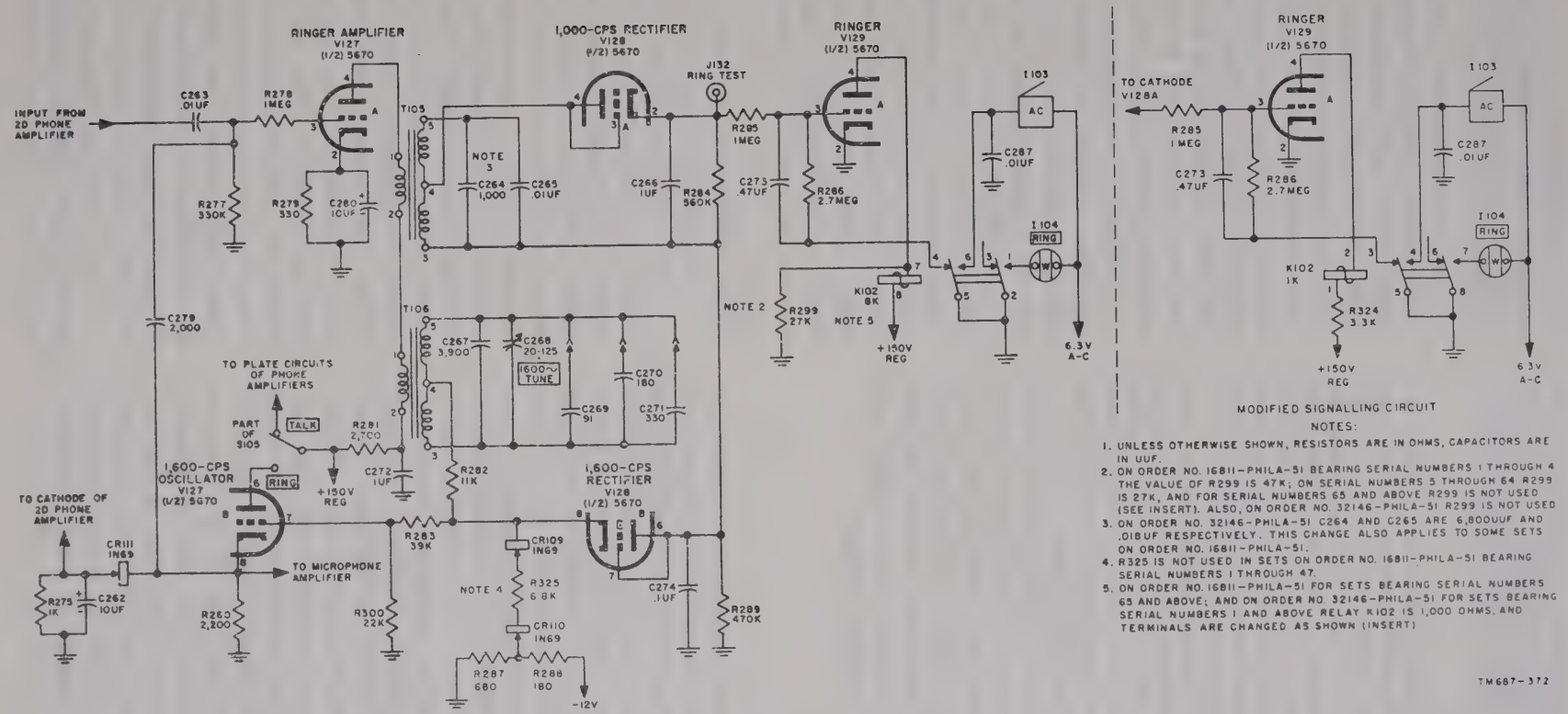

NOTES:

1. UNLESS OTHERWISE SHOWN, RESISTORS ARE IN OHMS, CAPACITORS ARE IN UUF.
2. ON ORDER NO. 16811-PHILA-51 BEARING SERIAL NUMBERS 1 THROUGH 4 THE VALUE OF R299 IS 47K; ON SERIAL NUMBERS 5 THROUGH 64 R299 IS 27K, AND FOR SERIAL NUMBERS 65 AND ABOVE R299 IS NOT USED (SEE INSERT). ALSO, ON ORDER NO. 32146-PHILA-51 R299 IS NOT USED
3. ON ORDER NO. 32146-PHILA-51 C264 AND C265 ARE 6,800UUF AND .01BUF RESPECTIVELY. THIS CHANGE ALSO APPLIES TO SOME SETS ON ORDER NO. 16811-PHILA-51.
4. R325 IS NOT USED IN SETS ON ORDER NO. 16811-PHILA-51 BEARING SERIAL NUMBERS 1 THROUGH 47.
5. ON ORDER NO. 16811-PHILA-51 FOR SETS BEARING SERIAL NUMBERS 65 AND ABOVE; AND ON ORDER NO. 32146-PHILA-51 FOR SETS BEARING SERIAL NUMBERS 1 AND ABOVE RELAY K102 IS 1,000 OHMS, AND TERMINALS ARE CHANGED AS SHOWN (INSERT)

TM687-372

Figure 189. Signaling circuits.

winding of the transformer is tuned to 1,000-cps by capacitors C264 and C265. The output from the tuned circuit is taken at terminal 4 of the winding and applied to the plate of 1,000-cps rectifier V128A.

Note. In some signaling circuits, the value of capacitors C264 and C265 were changed (note 3, figure 189) to tune secondary winding 3–4–5 of transformer T105 to approximately 650 cps. With the transformer secondary winding tuned to 1,000-cps, tube V128A could produce a high positive voltage due to high-level 1,000-cps signals such as would be received during lineup (par. 303*b*). This positive voltage could be sufficiently high to overcome the negative voltage produced by tube V128B as a result of 1,600-cps ringing signals (par. 305). Thus, ringing indications could not be produced during lineup (par. 307). With secondary winding 3–4–5 of transformer T105 tuned to 650 cps, tube V128A will not produce a high positive voltage during lineup, permitting ringing during lineup.

b. 1,000-cps Rectifier. Tube V128A, which is a triode connected as a diode, rectifies the 1,000-cps signals from the 1,000-cps tuned circuit. The rectified signals are filtered by capacitor C266 and developed across resistor R284. The voltage across resistor R284 and capacitor C266 is a positive voltage.

307. Ringer
(fig. 189)

a. When no 1,600-cps signals are received by the signaling circuit, the positive voltage produced by the 1,000-cps rectifier (par. 306) is greater than the negative voltage produced by the 1,600-cps rectifier (par. 305). Thus, a net positive voltage is applied through resistor R285 to the grid of ringer tube V129A. Under this condition, tube V129A conducts heavily. The plate circuit of the ringer is connected in series with the winding of relay K102 through limiting resistor R324 to the +150-volt regulated supply. In the completely modified signaling circuits (except for those bearing serial numbers 1 through 64 on Order No. 16811–Phila–51) shown in the insert to figure 189, current-limiting resistor R324 is connected in series with the winding of relay K102. Conduction through the tube operates relay K102 which, in turn, returns the grid of the tube to ground through grid-leak resistor R286 and bypass capacitor C273. Resistor R285 and capacitor C273 comprise a time delay circuit which prevents 1,600-cps voice components of short duration from causing false ringing. Resistor R286 provides the discharge path for capacitor C273 when the relay releases. Operation of the relay opens the ground return of buzzer I 103 and of RING lamp I 104. On the unmodified signaling circuits, the plate is connected to the regulated 150-volt supply through the winding of relay K102 and to ground through resistor R299. This resistor adds an additional current through the relay winding. The additional current requires that the grid of the ringer be driven several volts negative before the relay releases. In the modified circuits, R299 is not used and the numbering of K102 relay contacts has been changed as shown in the modified signaling circuit (fig. 189).

b. When 1,600-cps signals are received by the signaling circuit, or when 1,600-cps ringing signals are generated by the 1,600-cps oscillator, the negative output of the 1,600-cps rectifier is sufficient to cut off ringer tube V129A, thereby causing relay K102 to release. The closed contacts of the released relay complete the ground return for the buzzer and the RING lamp. The buzzer then rings and the RING lamp lights. Capacitor C287 prevents arcing when contacts 4 and 5 (5 and 6 on unmodified circuits) of relay K102 open.

308. 1,600-cps Oscillator

a. When the RING-TALK switch is held in the RING position, +150 volts is applied to the plate of 1,600-cps oscillator tube V127B. Tube V127B and ringer amplifier tube V127A, constitute a two-stage oscillator with an output frequency of 1,600-cps. Noise voltages present at the grid of the ringer amplifier are amplified and 1,600-cps components are selected by the 1,600-cps tuned circuit. Portions of the tuned circuit voltage is developed across the voltage divider consisting of resistors R282, R283, and R300. The voltage across resistors R283 and R300 is limited and the voltage across resistor R300 is applied to the grid of the 1,600-cps oscillator. The limiting action and voltage division determine the amplitude of oscillations. Tube V127B is a cathode follower and the voltage developed across cathode resistor R280 is coupled through capacitor C279 and resistor R278 to the grid of the ringer amplifier.

b. The 1,600-cps signal that is developed across resistor R280 is coupled through capacitor C277 and C276 (fig. 188) to the microphone

amplifier. In addition, the 1,600-cps oscillations are coupled by transformer T106 to the 1,600-cps rectifier, where they produce a negative output that cuts off ringer tube V129A (fig. 189). This, in turn, causes the buzzer to ring and the RING lamp to light.

CHAPTER 7

FIELD MAINTENANCE

Note. This chapter contains information pertinent to field maintenance. The amount of repair that can be performed by units having field maintenance responsibility is limited only by the tools and test equipment available and the skill of the repairman.

Section I. TROUBLE SHOOTING AT FIELD MAINTENANCE LEVEL

Warning: When servicing the radio transmitter, be extremely careful not to touch high voltages. With the high-voltage switch off, potentials as high as 850 volts might be present in the transmitter and power supply. Keep one hand in a pocket when measuring socket voltages with the probe. Use a shorting stick according to the procedure outlined in paragraph 133 to discharge the high-voltage capacitors in the tuner and driver assemblies.

309. Troubleshooting Procedures

The first step in servicing a defective radio set is to sectionalize the fault. Sectionalization means tracing the fault to the *major component, assembly, or circuit* responsible for the abnormal operation of the set. The second step is to localize the fault. Localization means tracing the fault to the defective *circuit element* responsible for the abnormal condition. Some faults such as burned-out resistors, rf arcing, and shorted transformers often can be located by sight, smell, and hearing. The majority of faults, however, must be localized by *checking voltage and resistance.*

a. System Sectionalization of Trouble to Component. Refer to paragraph 177 for a procedure to determine which component of the radio set is faulty.

b. Sectionalization or Localization of Trouble. The tests listed below aid in isolating the source of trouble. To be effective, follow each procedure in the order given. Servicing procedure should cause no further damage to the radio set.

(1) *Visual inspection.* The purpose of visual inspection (par. 153) is to locate any visible trouble. Through this inspection alone, the repairman may frequently discover the trouble, or determine the stage in which the trouble exists. This inspection is valuable in avoiding additional damage to the receiver which might occur through improper servicing methods and in preventing future failures.

(2) *Operational test.* The operational test (par. 313) indicates the general source of trouble without performing a time-consuming disassembly of a component.

(3) *Field maintenance troubleshooting chart.* The troubleshooting charts (par. 315 and 316) suggest probable causes of trouble and repair procedures after the repairman has noted as many symptoms of trouble as possible.

(4) *Signal substitution.* Signal substitution information, contained in paragraphs 319 and 320, will help the repairman perform a rapid check of a unit suspected of being faulty. The principal advantage of the signal substitution method is that it usually enables the repairman to sectionalize a trouble accurately and quickly.

(5) *Check of circuit elements.* The test procedures and data for checking circuit elements (par. 321 through 333) will help the repairman determine if a suspected circuit element is faulty.

(6) *Final testing.* If a plug-in assembly is suspected of being faulty, performing the final test of the assembly might be used by the repairman to find the trouble. The procedures for performing the final tests are outlined in paragraphs 357 through 378.

310. Troubleshooting Data

Take advantage of the material supplied in this manual. It will help in the rapid location of faults. Consult the following trouble-shooting data:

a. Radio Transmitter.

Fig.	Par.	Description
7		Upper chassis in raised position.
8		Top view.
9		Right side view.
99 to 102		Lubrication.
	315	Troubleshooting chart.
125		Top view, tube location.
126		Right side view, tube location.
127		Left side view, tube location.
	320	Signal substitution.
190 to 196		Voltage and resistance measurements.
206 to 221		Circuit element location diagrams.
	368 to 378	Final test.
	155 to 166	Removal of plug-in assemblies.
	340	Removal of upper chassis from transmitter.
	179	Equipment performance checklist.
	187 to 254	Theory.
268		Schematic diagram.
281 to 291		Wiring diagrams.

b. Radio Receiver.

Fig.	Par.	Description
21		Front view.
22		Top view.
23		Bottom view.
99, 114, 115, and 116.		Lubrication.
	316	Troubleshooting chart.
129		Top view, tube location.
130		Bottom view, tube location.

b. Radio Receiver (continued).

Fig.	Par.	Description
131		Location of power supply tubes.
	320	Signal substitution.
200 to 202		Voltage and resistance measurements.
232 to 243		Circuit element location diagrams.
	357 to 367	Final test.
	165 to 172	Removal of plug-in assemblies.
	179	Equipment performance checklist.
	256 to 269 and 280 to 308.	Theory.
276		Schematic diagram.
299 to 306		Wiring diagram.

c. Transmitter Rf Tuners.

Fig.	Par.	Description
11		Rf tuner identification.
103 to 108		Lubrication.
124		Tube location.
222 to 227		Circuit element location diagrams.
197 and 198		Voltage and resistance measurements.
	165	Removal from transmitter.
	338 and 339	Disassembly, cleaning and lubrication.
	221 to 224	Theory.
269 and 270		Schematic diagrams.
292 and 293		Wiring diagrams.

d. Power Supply PP–685/TRC.

Fig.	Par.	Description
12		Front view.
13		Top view.
99 and 113		Lubrication.
	315	Troubleshooting chart.
128		Tube location.
199		Voltage and resistance measurements.
228 to 231		Circuit element location diagrams.
	328	Test of blower motor.
	368 to 378	Final test.
	172	Removal of low-voltage plug-in assembly.
	179	Equipment performance checklist.
	249 to 253	Theory.
275		Schematic diagram.
297 and 298		Wiring diagrams.

e. Transmitter Base-band Amplifier Plug-in Assembly.

Fig.	Par.	Description
195		Voltage and resistance measurements.
219 to 221		Circuit element location diagrams.
	157	Removal from transmitter.
	179	Equipment performance checklist.
	344	Final test.
	215	Theory.
283		Wiring diagram.

f. Crystal Oscillator Plug-in Assembly.

Fig.	Par.	Description
109		Lubrication.
193		Voltage and resistance measurements.
210 and 211		Circuit element location diagrams.
	158	Removal from transmitter.
	179	Equipment performance checklist.
	345	Final test.
	228 to 230	Theory.
287		Wiring diagram.

g. 60-cps Modulator Plug-in Assembly.

Fig.	Par.	Description
191		Voltage and resistance measurements.
208 and 209		Circuit element location diagrams.
	159	Removal from transmitter.
	179	Equipment performance checklist.
	346	Final test.
	240 and 241	Theory.
290		Wiring diagram.

h. Pulsed Oscillator Plug-in Assembly.

Fig.	Par.	Description
110		Lubrication.
192		Voltage and resistance measurements.
212 and 213		Circuit element location diagrams.
	159	Removal from transmitter.
	179	Equipment performance checklist.
	347	Final test.
	231 to 233	Theory.
288		Wiring diagram.

i. Rf Exciter Plug-in Assembly.

Fig.	Par.	Description
111 and 112		Lubrication.
190		Voltage and resistance measurements.
215 to 218		Circuit element location diagrams.
	162	Removal from transmitter.
	179	Equipment performance checklist.
	349	Final test.
	215 to 220	Theory.
285		Wiring diagram.

j. Low-power Alarm Plug-in Assembly.

Fig.	Par.	Description
196		Voltage and resistance measurements.
214		Circuit element location diagram.
	163	Removal from transmitter.
	179	Equipment performance checklist.
	350	Final test.
	244	Theory.
291		Wiring diagram.

k. Afc If. Amplifier Plug-in Assembly.

Fig.	Par.	Description
194		Voltage and resistance measurements.
206 and 207		Circuit element location diagrams.
	161	Removal from transmitter.
	179	Equipment performance checklist.
	348	Final test.
	234 to 236	Theory, afc if. amplifier.
	237 and 338	Theory, afc limiters.
	239	Theory, afc discriminator.
289		Wiring diagram.

l. Receiver Power-supply Plug-in Assembly.

Fig.	Par.	Description
205		Voltage and resistance measurements.
239 and 240		Circuit element location diagram.
	167	Removal from receiver.

l. Receiver Power-supply Plug-in Assembly (continued).

Fig.	Par.	Description
	179	Equipment performance checklist.
	351	Final test.
	299	Theory.
306		Wiring diagram.

m. Calibrator Plug-in Assembly.

Fig.	Par.	Description
249 and 250		Circuit element location diagrams.
200		Voltage and resistance measurements.
	168	Removal from receiver.
	179	Equipment performance checklist.
	352	Final test.
	298	Theory.
300		Wiring diagram.

n. Receiver Base-band Amplifier Plug-in Assembly.

Fig.	Par.	Description
202		Voltage and resistance measurements.
232 to 234		Circuit element location diagrams.
	179	Equipment performance checklist.
	287 to 289	Theory, base-band amplifier.
	295	Theory, squelch circuit.
	297	Theory, meter amplifier.
	302 to 308	Theory, signaling circuits.
304		Wiring diagram.

o. Limiter-discriminator-afc Plug-in Assembly.

Fig.	Par.	Description
201		Voltage and resistance measurements.
235 and 236		Circuit element location diagrams.
	170	Removal from receiver.
	179	Equipment performance checklist.
	354	Final test.
	284 to 286	Theory, limiter and discriminator.
	290 to 293	Theory, afc circuits.
	296	Theory, bias supply.
303		Wiring diagram.

p. Receiver If. Amplifier Plug-in Assembly.

Fig.	Par.	Description
200		Voltage and resistance measurements.
237 and 238		Circuit element location diagrams.
	171	Removal from receiver.
	179	Equipment performance checklist.
	353	Final test.
	280 to 283	Theory, if. amplifier.
	294	Theory, agc circuits.
302		Wiring diagram.

q. Receiver Tuners.

Fig.	Par.	Description
117 and 118		Lubrication.
132 and 133		Tube location.
244 to 248		Circuit element location diagrams.
203 and 204		Voltage and resistance measurements.
	165	Removal from receiver.
	334	Disassembly.
	272 to 274	Theory, B-band tuner.
	275 to 279	Theory, C-band tuner.
278 and 279		Schematic diagrams.
307 and 308		Wiring diagrams.

r. Low-voltage Rectifier Plug-in Assembly.

Fig.	Par.	Description
199		Voltage and resistance measurements.
230 and 231		Circuit element location diagrams.
	172	Removal from power supply.
	179	Equipment performance checklist.
	252	Theory.
298		Wiring diagram.

s. Switch Box.

Fig.	Par.	Description
251		Circuit element location diagram.
	246	Theory.
272		Schematic diagram.
294		Wiring diagram.

t. Interconnecting Box.

Fig.	Par.	Description
	247	Theory.
273		Schematic diagram.
295		Wiring diagram.

u. Autotransformer.

Fig.	Par.	Description
252		Circuit element location diagram.
	248	Theory.
274		Schematic diagram.
296		Wiring diagram.

v. Wattmeter.

Fig.	Par.	Description
253		Circuit element location diagram.
	254	Theory.

311. Use of Wiring Diagrams

a. Each circuit element or group of adjacent circuit elements on the wiring diagrams have been assigned an arbitrary station number. This number can be recognized because it is circled and is larger and darker than the other print on the diagram.

b. If a circuit element is near the part to which it connects, the actual connection is drawn on the wiring diagram.

c. If a circuit element is connected to a part in a distant station, the color of the interconnecting lead and the number of the distant station are indicated in small print next to the circuit element.

d. Use the following example as a guide for tracing circuits on the wiring diagrams.

(1) Refer to figure 281. Locate station 5, which appears as a large number 5 encircled, thus five.

(2) Trace the lead at terminal K of connector J101 to its termination.

(3) Notice that the lead above has a number 8 preceding the color designation. The number identifies the station at which the termination of the lead is located.

(4) By examining station eight for the WH-RED-YEL lead, observe that it is connected to terminal 2 of connector J140 on the diagram. Notice that the number 5 preceding the color designation at this connection identifies station five as the origin of the lead in this case.

312. Test Equipment Required for Troubleshooting

The test equipment required for troubleshooting Radio Set AN/TRC–24 is listed below. Test equipment required for signal substitution is listed in paragraph 319. A common usage name is indicated after each component. Refer to the manual listed next to the test equipment to obtain the best operating results.

Nomenclature	Common name	Technical manual
Electronic Multimeter TS–505/U.	Vtvm	TM 11–5511.
Multimeter TS–352/U	Multimeter	TM 11–5527.

313. Operational Test

To check the operation of the radio set, refer to the operational checks (par. 121) if the equipment is operating in a system. If the equipment is not operating as part of a system, refer to the equipment performance check list (par. 179).

314. Using Troubleshooting Charts

The troubleshooting charts (pars. 315 and 316) are supplied as an aid in locating trouble in the transmitter and the receiver. The charts list the symptoms that the repairman observes either visually or audibly while making a few simple tests. The charts also indicate how to sectionalize the troubles quickly to a defective stage or assembly. Once the trouble has been sectionalized, localize the trouble by performing signal substitution (par. 320) and by checking voltage and resistance measurements (fig. 190–205).

315. Troubleshooting Chart, Power Supply PP–685/TRC and Radio Transmitter T–302/TRC

Symptom	Probable trouble	Correction
1. Transmitter dead. No indication on AC VOLTS meter of power supply when 115V AC circuit breaker (CB1) operated to ON position.	Fuses open in interconnecting box or autotransformer.	Replace fuses.
	Autotransformer defective	Check dc resistance of autotransformer (par. 318*i*).
	Switch S1 of autotransformer open	Replace switch.
	Gasoline Engine Generator Set PU–286/G defective.	Refer to TM 11–940A to trouble shoot power unit.
2. Blower motor of transmitter fails to operate when AC VOLTS meter of power supply indicates 115 volts ac.	BLO 3A fuse F4 of power supply open	Replace fuse.
	Blower motor defective	Check blower motor (par. 330).
3. Blower in power supply or receiver fails to operate when temperature reaches 80° F.	Thermostat defective	Short thermostat. If fan operates with thermostat shorted, replace thermostat.
	Blower motor defective	Check blower motor (par. 330).
4. Amber FIL lamp of power supply does not light when 115V AC circuit breaker is operated to ON position.	Fuse F5, FIL 1.5A, of power supply open.	Replace fuse.
	Transformer T5 defective	Check transformer T5 (par. 318*g*).
	FIL lamp I 3 defective	Replace lamp.
5. No wind is detected at front panel of transmitter when blower operates.	Open hose connection at blower motor	Check hose connection.
6. High-voltage tubes V1, V2, V3, and V4 of power supply fail to light.	HV FIL 1A fuse, F1, open	Replace fuse.
	Transformer T2 defective	Check resistance of transformer T2 (par. 318*g*).
	Tube filaments open	Replace tubes.
7. Low-voltage tubes V5, V6, V7, V8, and V9 of power supply fail to light.	LV FIL 1.5A fuse, F2, open	Replace fuse.
	Transformer T3 defective	Check resistance of transformer T3 (par. 318*g*).
	Tube filaments open	Replace tubes.
8. DC TEST meter M2 fails to indicate when 150V DC circuit breaker is ON.	Circuit breaker defective	Check circuit breaker (par. 332).
	150V DC .5 AMP fuse F3 open	Replace fuse.
	Tubes V5, V6, V7, V8, and V9 defective.	Check tubes (par. 152).
9. 750V DC amber lamp I 1 and DC VOLTS meter M2 fail to indicate when 750V DC circuit breaker is operated to ON position.	H-v interlock system is open	Refer to paragraph 250 for functioning of h-v interlock system.
	Blower motor of transmitter defective	Check blower motor (par. 330).
	Tube V1 or V2 defective	Check tube (par. 152).
10. TEST meter of transmitter does not read 10 to 15 μa when TEST switch S104 of transmitter is in OSC MOD position.	Tubes V105, V106, or V107 defective in transmitter.	Check tubes (par. 152).
	Rf exciter unit faulty	Take voltages and resistance measurements at socket of tubes V105, V106, and V107.
11. TEST meter of transmitter does not read 10 to 25 μa when TEST switch is in DRIVER GRID position.	Tube V108, V109, or V110 defective	Check tube (par. 152).
	Rf exciter unit defective	Check voltages and resistances of rf exciter unit (fig. 190).
		Check TEST meter reading with TEST switch in OSC MOD position (item 10 above).
12. FREQ DRIFT meter does not respond to DISCR CENTER control when XTAL SEL switch is in DISCR CENTER position.	Tube V114, V118, V119, V120, V121, V122, or V123 defective.	Check tube (par. 152).
	10.125-mc crystal Y103 defective	Replace crystal.
	Switch S106 faulty	Clean switch, check for continuity, and replace if necessary.

Symptom	Probable trouble	Correction
	Flexible shaft from DISCR CENTER panel control not connected.	Connect shaft.
	Defective circuit elements in crystal oscillator circuit.	Check grid current of crystal oscillator at test jack J122 (fig. 193).
	FREQ DRIFT meter defective	Replace meter.
	Defective circuit elements in transmitter afc if. assembly.	Perform signal substitution on afc if. assembly (par. 320*c*).
13. MEASURE meter of transmitter does not read 10 to 30 μa when MEASURE switch is operated to RF CHAN TUNE position.	Defective transmitter afc if. crystal oscillator, or pulsed oscillator assembly.	Perform signal substitution on afc if. amplifier assembly (par. 320*c*). Check voltages at test jacks of crystal oscillator plug-in assembly (fig. 193) and pulsed oscillator assembly (fig. 192).
14. FREQ DRIFT meter does not hold steady at 0 when XTAL SEL switch is in DECADE CHANS position but does in UNIT CHANS position (item 15).	2.5-mc pulse generator defective	Check tube V115 (par. 152). Check 2.5 mc pulse generator grid current at jack J124 (fig. 193). Check voltages and resistances at socket of tube V115 (fig. 193).
15. FREQ DRIFT meter does not hold steady at 0 when XTAL SEL switch is in UNIT CHANS position but does in DECADE CHANS position (item 14).	.5-mc pulse generator defective	Check tube V113 (par. 152). Check .5-mc pulse generator grid current at jack J125 (fig. 193). Check voltages and resistances at socket of tube V113 (fig. 193).
16. Front-panel AFC control does not rotate during equipment warm up; rotates continuously after warm up.	60-cps modulator unit defective	Check tubes V124 and V125 (par. 152). Check voltages and resistances of 60-cps modulator (fig. 191).
	Afc motor of transmitter defective	Check afc motor (par. 329).
17. MEASURE meter does not indicate peaks when RF CHAN TUNE dial is rotated.	Crystal oscillator faulty	Refer to item 12 above.
	Pulsed oscillator faulty	Refer to item 12 above.
	Rf exciter unit faulty	Refer to item 10 above.
18. MEASURE meter of transmitter does not respond to 1KC ADJ control.	1-kc oscillator defective	Check tube V104 (par. 152). Check voltage and resistance at pins of tube V104 (fig. 195).
19. MEASURE meter does not indicate readings.	Defective meter amplifier circuit	Check tubes V103 and V104 (par. 152). Check voltage and resistance of first and second meter amplifier stages (fig. 195).
20. MEASURE meter does not respond to DISCR RF DRIVE control.	Defective afc if. amplifier	Perform signal substitution on afc if. amplifier (par. 320*c*).
21. MEASURE meter does not respond to 1 kc or 68 kc signals from other stations in system.	Transmitter input or base-band amplifier circuit defective.	Perform signal substitution on input and transmitter base-band amplifier circuits (par. 320*b*).
22. TEST meter M102 does not respond to DRIVER TUNE control when TEST switch is in DRIVER CATH position.	Rf exciter unit defective	Measure voltages and resistances of rf exciter assembly (fig. 190). Check tube V1 of driver (par. 152).
23. TEST meter M102 does not respond to DRIVER OUTPUT COUPLING and GRID controls when TEST switch is in PWR AMPL GRID or MULT GRID position.	Rf tuner defective	Check voltages and resistance readings of rf tuner (fig. 197, B-band; fig. 198, C-band).
	Driver output coupling capacitor C184 defective.	Replace capacitor C184.
24. TEST meter does not indicate when TEST switch is in MULT CATH or PWR AMPL CATH position.	Rf tuner defective	Connect wattmeter to output of driver stage at connector J112. If driver output is normal (par. 349*k*), check rf

Symptom	Probable trouble	Correction
		tuner tubes and voltage and resistance measurements. If no output from driver, check driver (items 22 and 23 above).
25. TEST meter indicates incorrect values when TEST switch is in FWD PWR or REFL PWR position.	Directional coupler faulty	Replace crystals in directional coupler with spares.
	Antenna mismatched	Check antenna for dipole adjustments. Check antenna cable for short or open.
26. LOW PWR ALARM indicator I 101 cannot be lighted by adjusting THRESHOLD ADJ control.	Alarm amplifier circuit defective	Replace alarm amplifier tubes V111 and V112. Perform voltage and resistance measurements on alarm amplifier assembly (fig. 196).
27. 750V DC lamp I 1 extinguished	Overload current adjust resistor R1 of PP–685/TRC improperly adjusted.	Adjust control R1 until lamp glows steadily.
	Current overload exists in transmitter	Check for shorts in 750-volt circuits of transmitter and transmitter tuners.
28. Transmitter causing distortion in circuit.	Poor alinement or tracking of rf exciter.	Perform final test (par. 349). Check for distortion (par. 378).
	Faulty reactance modulator tube	Check tubes V105 and V106 (par. 152).

316. Troubleshooting Chart, Radio Receiver R–417/TRC

Symptom	Probable trouble	Correction
1. POWER lamp I 101 does not light when circuit breaker CB101 is operated to ON position.	No input power to receiver	Check output of autotransformer for 115 ±5 volts ac.
	Interlock system open	Check seating of each plug-in assembly. Check interlock system with ohmmeter for continuity (par. 333).
	Transformer T102 defective	Check resistance of transformer windings (par. 318).
	Circuit breaker CB101 defective	Check circuit breaker (par. 332).
	POWER lamp defective	Replace lamp.
2. MEASURE meter M102 does not indicate when MEASURE switch S106 is in B+ position. Buzzer sounds continuously.	Receiver power supply defective	Check tubes V116, V117, V118, V119 and V120 (par. 152). Check resistance between test jacks J130 and J128 with power disconnected. It should be 2,500 ohms. Check voltages and resistance in receiver power supply (fig. 205).
	Screen or plate supply of circuits other than power supply shorted.	Check B+ circuit of receiver (par. 148).
3. MEASURE meter does not indicate when AFC-OFF-CAL switch is held to CAL position and MEASURE switch is operated to SIG LEV position.	Cable W150 not connected between CAL OUT and ANTENNA jacks.	Connect cable.
	Calibrator defective	Check tube V101 (par. 152). Replace crystal Y101 of calibrator.
	Band-pass or dummy filter defective	Replace with dummy filter known to be good. Perform final test of band-pass filter (par. 356).
	Receiver tuner defective	Perform signal substitution on tuner (par. 320*d* or *e*). Check tubes in tuner (par. 152).
	Receiver if. amplifier defective	Perform signal substitution on receiver if. amplifier (par. 320*f*).

Symptom	Probable trouble	Correction
	Defective tubes	Check tubes V101, V102, V103, V104, V105, V106, V107, and V108 (par. 152).
4. FREQ DRIFT meter needle does not hold steady.	Receiver tuner local-oscillator frequency drifts.	Replace oscillator tube.
	Afc circuit defective	Perform signal substitution on limiter-discriminator-afc assembly (par. 320*g*).
	Afc motor defective	Check afc motor (par. 329).
5. ALARM lamp does not light when no signal is received. (SQUELCH control in extreme counterclockwise position.)	6.3-volt supply defective	Check winding resistances of power transformer T101 (par. 318).
	Squelch circuit defective	Check tube V125 (par. 152).
	ALARM lamp filament open	Replace lamp.
	Relay K101 defective	Check relay (par. 324).
6. ALARM lamp does not go out when signal is received (signal level indication is satisfactory).	Squelch tube V125 or associated circuit defective.	Check tube V125.
		Measure voltages and resistances at base of tube V125 (fig. 202).
	Relay K101 defective	Check relay (par. 324).
7. MEASURE meter does not indicate correctly when MEASURE switch is in OSC position.	Oscillator of tuner defective	Check tubes of tuner oscillator (par. 152).
8. MEASURE meter does not indicate correctly when MEASURE switch is in MIX position.	Mixer of tuner defective	Check mixer tube of rf tuner (par. 152). Perform signal substitution on rf tuner (par. 320*d* or *e*).
9. MEASURE meter does not indicate correctly when MEASURE switch is in 1ST LIM position. SIG LEV indication is normal.	Coupling network Z109 is defective	Check coupling network (par. 323).
	Crystal rectifier CR103 or CR104 defective.	Check crystal rectifiers (par. 325).
10. MEASURE meter does not indicate correctly when MEASURE switch is in 2ND LIM position. 1ST LIM indication is normal.	First limiter tube V109 defective	Check tube (par. 152).
	Coupling network Z110 defective	Check coupling network (par. 323).
	Crystal rectifier CR105 or CR106 defective.	Check crystal rectifier (par. 325).
11. MEASURE meter does not indicate correctly when MEASURE switch is in AFC BAL position. 2ND LIM position is normal.	Tube V113 defective	Check tube (par. 152).
	Discriminator or afc circuits of limiter discriminator and afc assembly faulty.	Perform signal substitution on limiter discriminator and afc assembly (par. 320*g*).
12. MEASURE meter does not indicate correctly when MEASURE switch is in MTR CAL position.	1-kc oscillator of transmitter defective	Check 1-kc oscillator (par. 315, item 18).
	Meter amplifier defective	Check tube V124 (par. 152). Perform signal substitution on meter amplifier circuit (par. 320).
13. MEASURE meter does not indicate correctly when MEASURE switch is in 1KC OUT position.	Base-band amplifier circuit defective	Check tubes V121, V122, and V123 (par. 152). Perform signal substitution on receiver base-band amplifier (par. 320*h*).
14. MEASURE meter does not indicate correctly when MEASURE switch is in 68KC OUT position. 1KC OUT position is normal.	Filter FL101 of receiver defective	Check filter (par. 322).
	68-kc amplifier defective	Check tube V124 (par. 152). Check for −4.5 volts between terminals 15 and 1 of connector P115.
15. No incoming order-wire signals heard in handset receiver. MEASURE meter reading is normal when MEASURE switch is in 1KC OUT position.	Defective phone amplifier circuit	Check tube V126 (par. 152).
	Filter FL104 of receiver defective	Perform signal substitution on phone amplifier (par. 320*h*). Check filter (par. 322).
	Handset receiver defective	Check handset (par. 327).

Symptom	Probable trouble	Correction
16. No outgoing order-wire signals received by distant station. No sidetone heard in receiver of handset.	Handset transmitter defective Microphone amplifier circuit is defective.	Check handset (par. 327). Check tube V129 (par. 152). Perform signal substitution on microphone amplifier circuit (par. 320*h*).
17. No incoming ringing signals heard on buzzer or indicated on RING lamp. Incoming voice signals heard normally at receiver of handset.	Ringer circuit defective	Check tubes V127 and V128 (par. 152). Perform signal substitution on ringer amplifier, 1,000-cps rectifier, and 1,600-cps rectifier circuits (par. 320*h*). Check for −12 volts between terminals 17 and 1 of connector P115.
18. No outgoing ringing signals received by distant station. Voice signals received normally. No local indications noticeable.	RING-TALK switch S105 defective 1,600-cps oscillator defective	Check switch for continuity. Check tube V127 (par. 152). Perform signal substitution on 1,600-cps oscillator (par. 320*h*).
19. Hum in order-wire and traffic circuits	60- or 120-cycle ac voltage in signal path.	Check B+ filters of power supply. Check all tubes for cathode-to-heater short.
20. Loud buzz	Excessive gain in rf and if sections caused by absence of agc voltage.	Check agc voltage at jack J114 of receiver if. amplifier (fig. 200).

317. Measuring Voltage and Resistance

Use the information in *a* through *h* below and the data in figures 190 through 205 to measure voltage and resistance.

a. Remove a plug-in assembly from its component to measure resistance.

b. When measuring voltage, remove a plug-in assembly from its component and connect it to the main chassis with the extension test cable (par. 24*k*).

c. Measure voltage and resistance with Electronic Multimeter TS/505–U or the equivalent.

d. When voltage and resistance readings are given at the same test point in a figure, the voltage readings are given above the line and resistance readings are given below the line.

e. Voltage readings are given in volts dc and resistance in ohms unless otherwise shown.

f. Voltage and resistance measurements for Radio Transmitter T–302/TRC are given in figures 190 through 198.

g. Voltage and resistance measurements for Power Supply PP–685/TRC are given in figure 199. In some plug-in assemblies, test jack J5 is not connected to the assembly chassis. In this case, the resistance reading between test jack J5 and the chassis should be infinite (open circuit). In cases where it is connected, the resistance reading will be O ohm. In the first case, the infinite resistance measurement is unreliable because leakage resistance may vary considerably.

Warning: Always connect the negative lead of the voltmeter to test jack J5 when measuring voltage between test jacks J5 and J14. By connecting the voltmeter leads oppositely the negative terminal of the voltmeter may be connected to B+ (150 volts). In cases where this terminal is interconnected with the meter case and the meter terminals are reversed, electrical shock may result upon contact with the chassis and the meter case.

h. The values of voltage and resistance for the receiver assemblies are given in figures 200 through 205. Listed in the receiver modifications chart below are the subassemblies, parts changed, and reasons for circuit changes on Order No. 16811–Phila–51 (serial numbers 65 and above) and Order No. 32146–Phila–51. In figure 202, the values of voltage and resistance shown are for the first two types of base-band

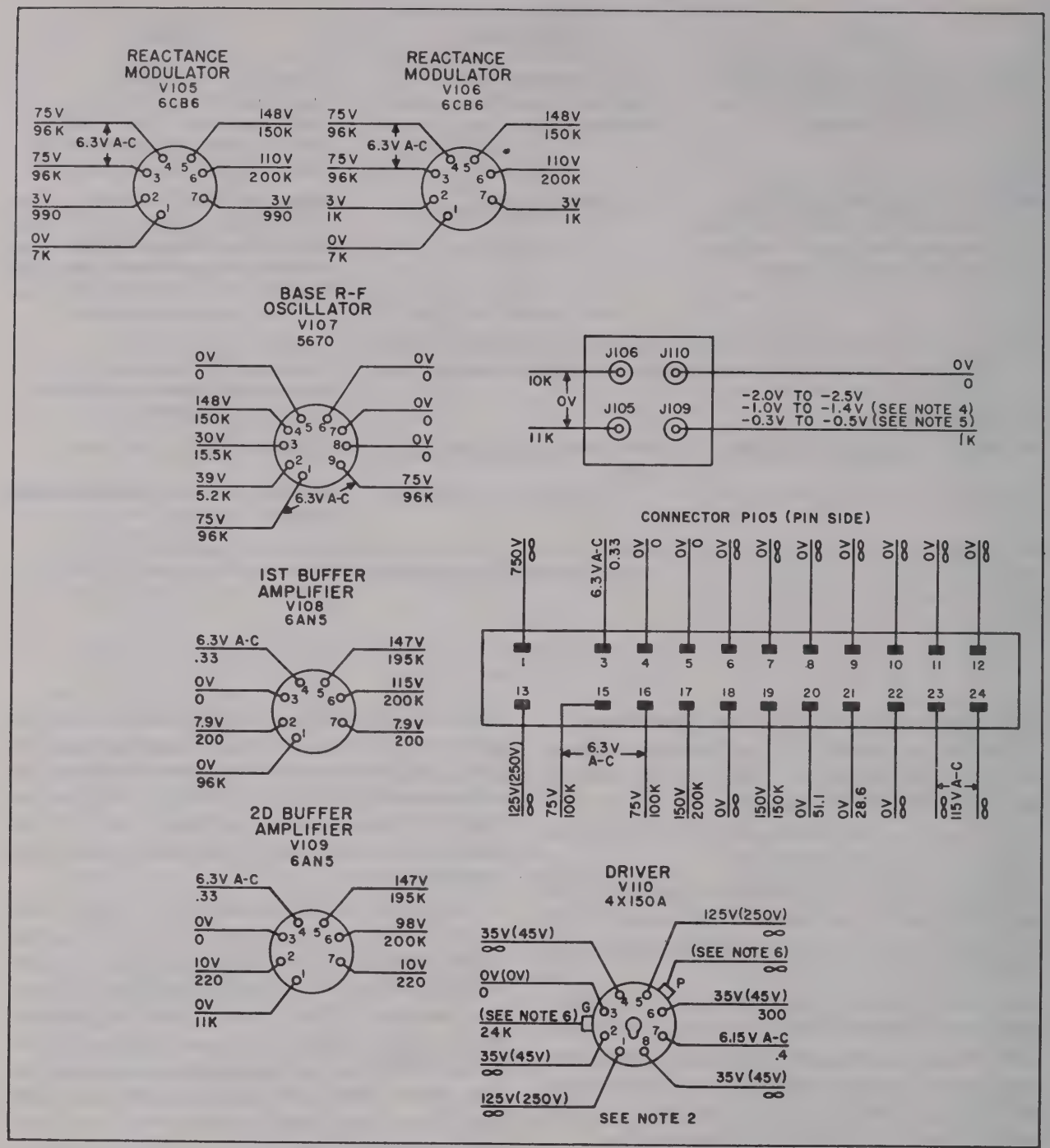

NOTES:

1. MEASURE WITH TRANSMITTER ADJUSTED FOR C-BAND OPERATION UNLESS OTHERWISE INDICATED.
2. MEASUREMENTS WITH TRANSMITTER ADJUSTED FOR B-BAND OPERATION ARE IN PARENTHESES.
3. ADJUST R-F CHANNEL TUNE CONTROL TO CHANNEL 1 UNLESS OTHERWISE INDICATED.
4. ADJUST R-F CHANNEL TUNE CONTROL TO CHANNEL 160.
5. ADJUST R-F CHANNEL TUNE CONTROL TO CHANNEL 250.
6. CANNOT BE MEASURED.

TM 687-220

Figure 190. Rf exciter plug-in assembly, voltage and resistance diagram.

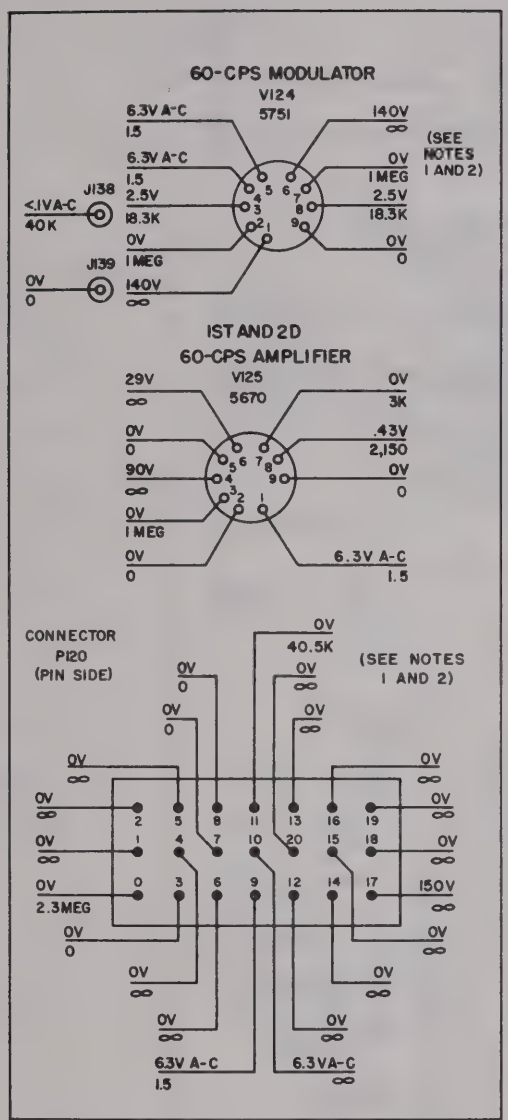

NOTES:

1. ON ORDER NO.16811-PHILA-51 (SERIAL NUMBERS 126 THROUGH 2496) RESISTORS R295, R299, AND R300 ARE 1MEG, 6810 OHMS, AND 82.5K, RESPECTIVELY. THE RESISTANCE MEASUREMENTS ARE CHANGED AS SHOWN BELOW:

TUBE OR CONNECTOR	PINS	RESISTANCE VALUE
V124	3 AND 8	6.3K
V124	7	1.4 MEG
P120	0	2.8 MEG

2. ON ORDER NO. 32146-PHILA-51 (SERIAL NUMBERS 1 AND ABOVE) AND THE SETS ON ORDER NO.16811-PHILA-51 USING R295, R299, R300, R301, R302, AND R303 (549K, 12.1K, 82.5K, 5110 OHMS, 10K, AND 5110 OHMS, RESPECTIVELY) RESISTANCE MEASUREMENTS ARE CHANGED AS SHOWN BELOW:

TUBE OR CONNECTOR	PINS	RESISTANCE VALUE
V124	3 AND 8	11.8K
V124	7	989K
P120	0	2.3 MEG

TM687-374

Figure 191. 60-cps modulator plug-in assembly, voltage and resistance diagram.

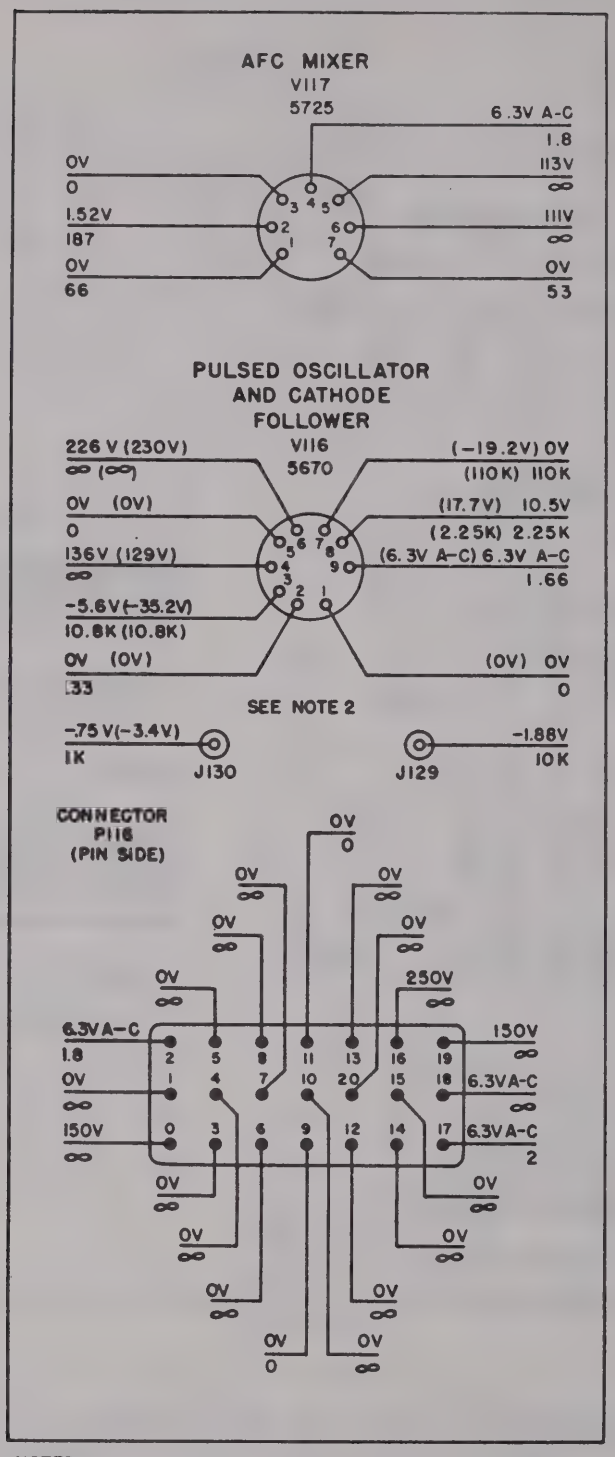

NOTES:

1. MEASURE WITH SWITCH S106 IN DECADE CHANS POSITION UNLESS OTHERWISE INDICATED.
2. MEASURE WITH SWITCH S106 IN UNIT CHANS POSITION WHEN READING IS IN PARENTHESIS.

TM687-222

Figure 192. Pulsed oscillator plug-in assembly, voltage and resistance diagram.

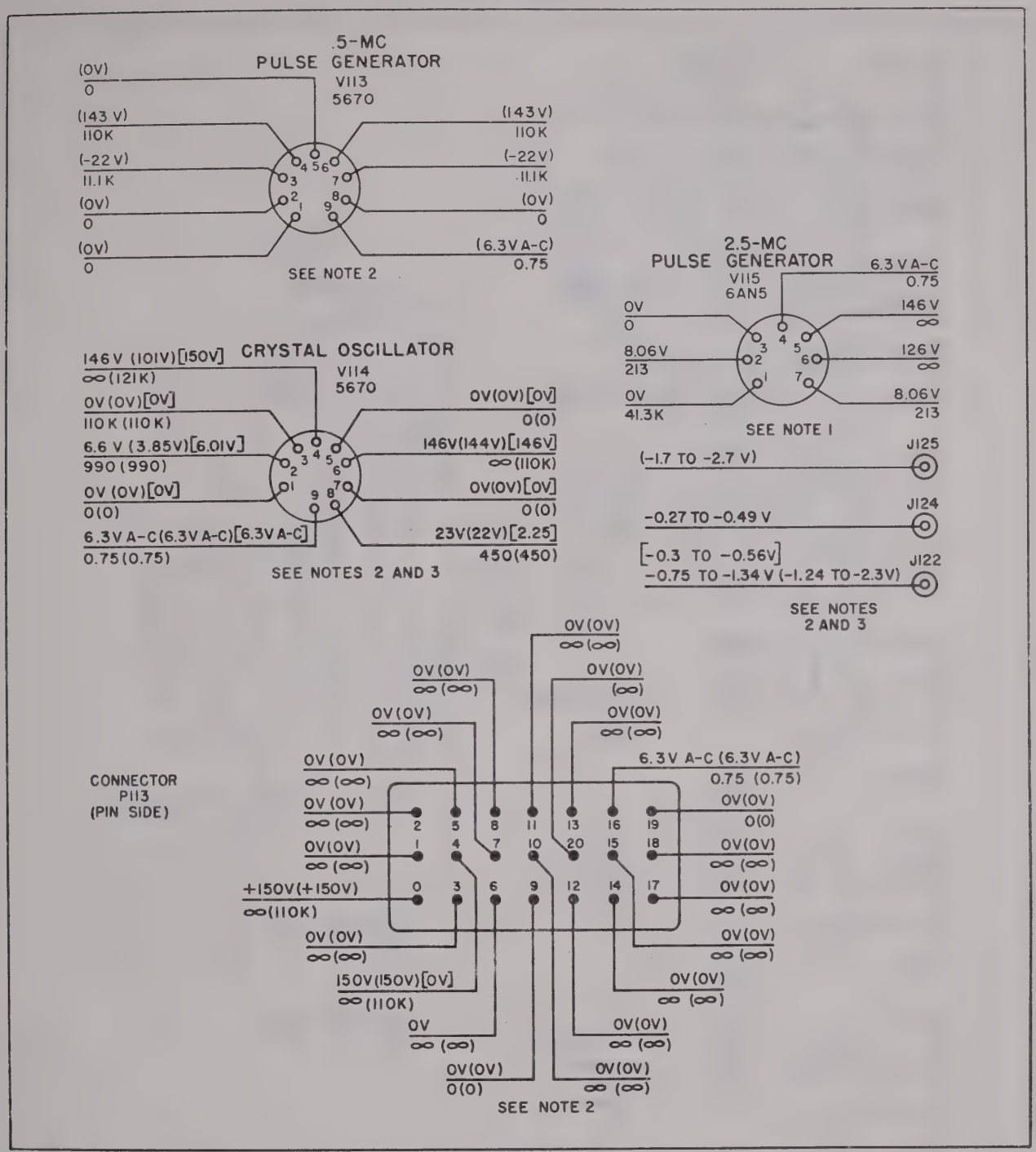

NOTES:

1. MEASURE WITH SWITCH S106 IN DECADE CHANS POSITION UNLESS OTHERWISE INDICATED.
2. MEASURE WITH SWITCH S106 IN UNIT CHANS POSITION WHEN READING IS IN PARENTHESIS.
3. MEASURE WITH SWITCH S106 IN DISCR CENTER POSITION WHEN READING IS IN BRACKETS.
4. NC INDICATES NO CONNECTION.

TM687-224

Figure 193. Crystal oscillator plug-in assembly, voltage and resistance diagram.

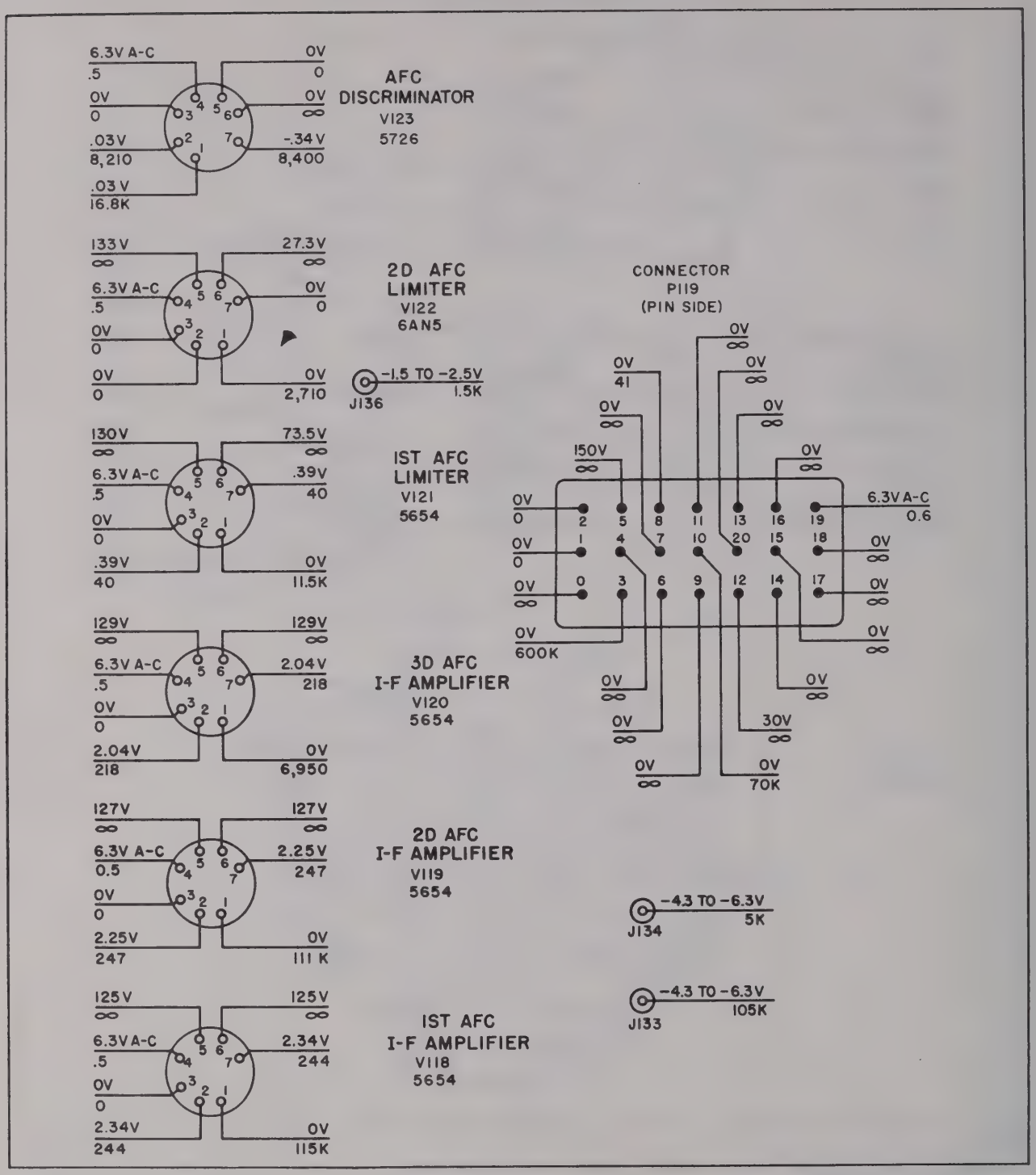

NOTE:

BEFORE MEASURING, OPERATE POTENTIOMETERS R141, R134, R139, R104, AND SWITCH S102 TO EXTREME COUNTERCLOCKWISE POSITIONS.

TM687-225

Figure 194. Transmitter if. assembly, voltage and resistance diagram.

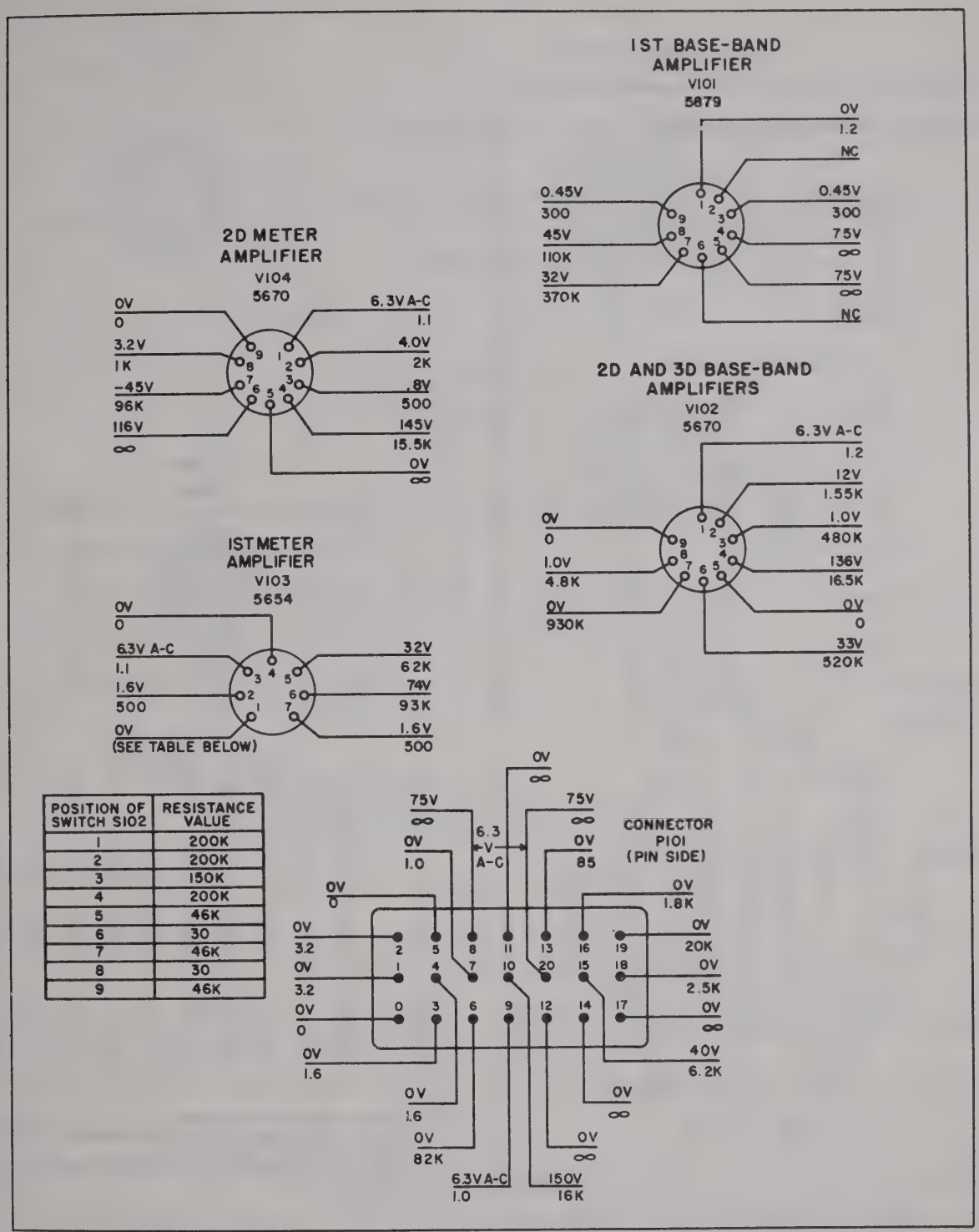

NOTES:

1. NC INDICATES NO CONNECTION.
2. BEFORE MEASURING, OPERATE POTENTIOMETERS R141, R134, R139, R104, AND SWITCH S102 TO EXTREME COUNTERCLOCKWISE POSITION.
3. ADJUST INPUT ADJ R101 TO 15db POSITION.
4. VOLTAGES ARE IN VOLTS D-C AND RESISTANCE IN OHMS UNLESS OTHERWISE INDICATED.

TM687-226

Figure 195. Transmitter base-band amplifier, voltage and resistance diagram.

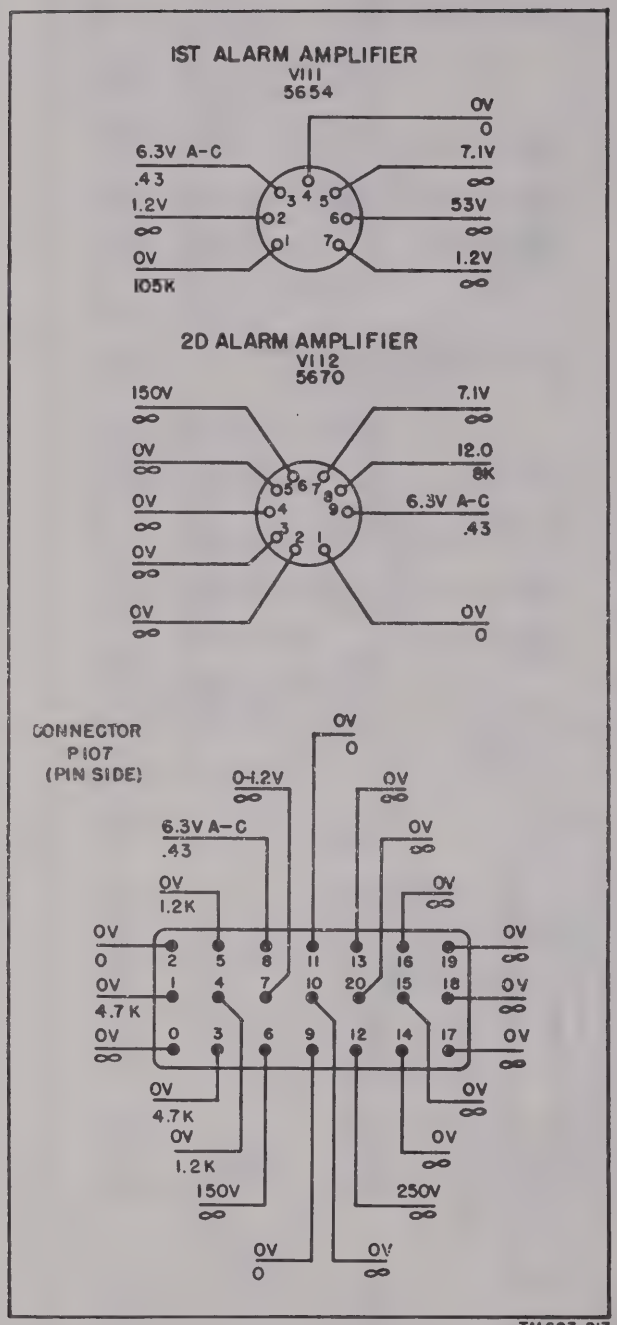

Figure 196. Transmitter alarm circuit, voltage and resistance diagram.

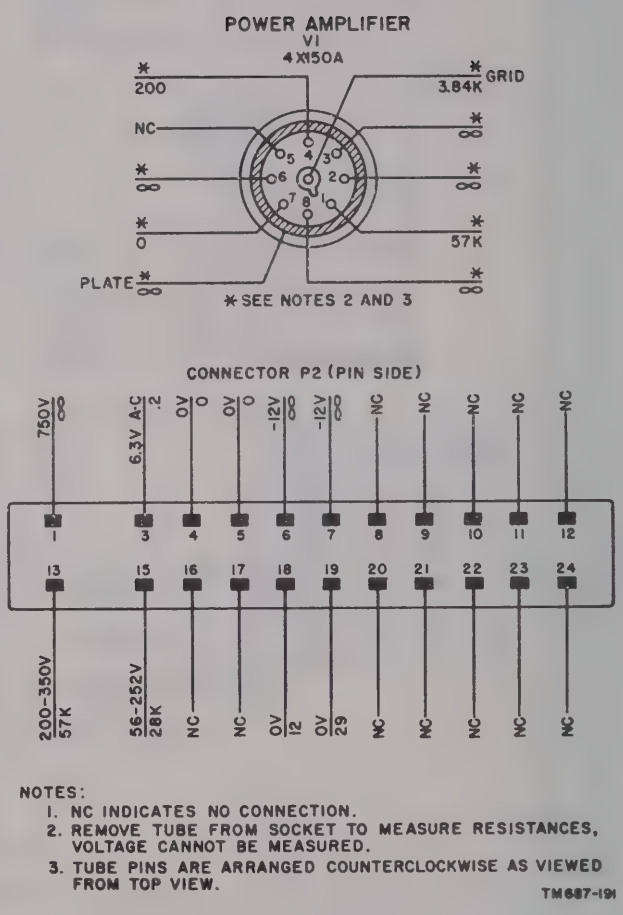

Figure 197. Transmitter B-band tuner, voltage and resistance diagram.

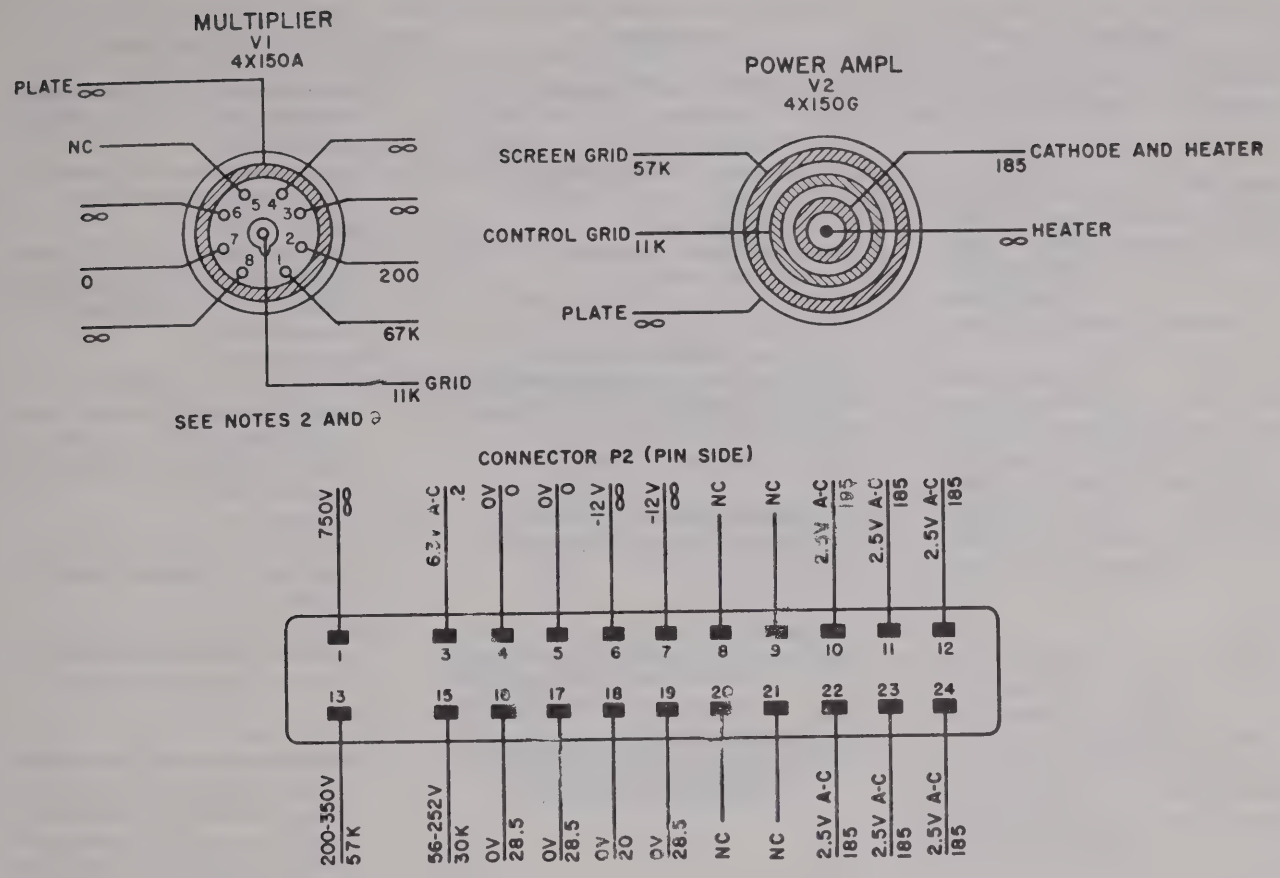

NOTES:

1. NC INDICATES NO CONNECTION
2. REMOVE TUBE FROM SOCKET TO MEASURE RESISTANCES, VOLTAGE CANNOT BE MEASURED.
3. TUBE PINS ARE ARRANGED COUNTERCLOCKWISE AS VIEWED FROM TOP.

TM687-192

Figure 198. Transmitter C-band tuner, voltage and resistance diagram.

Figure 199. Power Supply PP–685/TRC, voltage and resistance diagram.

(Contained in separate envelope)

amplifier assemblies indicated in the receiver modifications chart below. The voltage and resistance measurements for types 3 through 8 differ from figure 202 as shown in the insert to the figure. The values for types 7 and 8 also include the differences shown in the bottom line of the chart.

i. The receiver modifications chart follows:

Subassembly	Type	Circuit changes	Reason for circuit change
Calibrator	1	None.	
	2	Terminals 0, 3, 6, 9, 11, 12, 14, 15, 16, 17, 18, and 20 of connector P107 are connected together and to ground.	To prevent coupling of undesired harmonics to receiver circuits.
	3	Changed to circuit shown in figure 276.	To increase level of output.
Base-band amplifier and order wire.	1	*a.* R267 is 1 meg. *b.* R299 is 47K.	
	2	*a.* R267 is 1.2 meg (same as main schematic).	*a.* R267 increased to 1.2 meg to decrease output of second phone amplifier V126 to Handset H–90/U with inputs from transmitter.

Subassembly	Type	Circuit changes	Reason for circuit change
		b. R299 is 27K (same as main schematic).	*b.* R299 decreased to 27K to increase operating current of relay K102.
	3	*a.* Same as *a* of type 2	*a.* Same as type 2.
		b. Change to circuit shown in figure 189.	*b.* To insure operation and release of K102 at proper current values.
	4	*a.* Same as type 3	*a.* Same as type 3.
		b. R325, 6.8K, is in series with CR109 and CR110.	*b.* To decrease limiting action of CR109 and CR110 to increase output of V128B, thus obtaining larger bias to cut off V129.
	5	*a.* Same as type 4	*a.* Same as type 4.
		b. C294, 24 $\mu\mu$f, connected at junction of C283 and W107 to ground.	*b.* Added as part of de-emphasis network of limiter discriminator and AFC (R185, R186, and C208) to provide increased de-emphasis of input to V121.
	6	*a.* Same as type 5	*a.* Same as type 5.
		b. R233 is 22K, and R234 is 6.8K	*b.* To change feedback of base-band amplifiers to improve flatness of output.
	7	*a.* Same as type 6	*a.* Same as type 6.
		b. C295, 10 μf, added from cathode of V126 to ground. R271 and R273 are 150K and 3.6K, respectively.	*b.* To reduce microphonic noise and hum in microphone amplifiers.
	8	*a.* Same as type 7	*a.* Same as type 7.
		b. C264 and C265 are 6,800 $\mu\mu$f and 18,000 $\mu\mu$f, respectively.	*b.* Tunes resonant circuit of the positive voltage rectifier section of V128 (pins 1 through 4) to approximately 650 cps. This prevents disabling of the ringer by high-level 1,000-cps signals such as would be received during lineup.
Limiter	1	C211 and C212 are 100 $\mu\mu$f.	
Discriminator and afc	2	C211 and C212 are 110 $\mu\mu$f (same as main schematic).	To increase output of V112.
	3	R178 is 1.5K	To decrease reading of MEASURE meter M102 when MEASURE switch S106 is in the 2ND LIM position.
	4	*a.* Same as type 2	*a.* Same as type 2.
		b. R318 is 51.1K	*b.* To increase output of discriminator V111.
	5	*a.* Same as type 4	*a.* Same as type 4.
		b. R201, R202, R203, R204, and R205 are 147K, 3,480, 5,110, 10K, and 5,110, respectively.	*b.* To prevent unbalance and resulting low gain of modulator tube V113 because of possible cutoff of tube.
Receiver chassis (bearing serial number 1–18, Order No. 16811–Phila–51).	1	None.	
(Bearing serial number 19 and above.)	2	Wires to terminals 4 and 7 of J112 disconnected; terminal 4 of J108 connected to terminal 7 of J134.	To prevent coupling of undesired harmonics from the calibrator to other units of the receiver.
Base-band amplifier and metering circuit.	1	R310 is 4.3K	To increase range of DISCR RF DRIVE potentiometer R139.
	2	None.	
	3	Shielding added to load from plate (pin 5) of V105.	To prevent undesired pick-up.
	4	C312, 180 $\mu\mu$f, is in parallel with crystal rectifier CR101.	To bypass rf pick-up around rectifier CR101.

Subassembly	Type	Circuit changes	Reason for circuit change
Rf exciter	1	Reactance modulator circuit is as in figure 141.	To improve interchannel modulation distortion characteristics of transmitter.
	2	None.	
	3	*a.* Same as type 2	*a.* Same as type 2.
		b. R172 is 100 ohms	*b.* To increase reading of TEST meter M102 when front-panel TEST switch S105 is in the DRIVER GRID position.
	4	*a.* Same as type 3	*a.* Same as type 3.
		b. C311, .047 μf, connected from terminal 17 to ground.	*b.* To eliminate spurious radiations.
	5	*a.* Same as type 4	*a.* Same as type 4.
		b. R148 and R149 removed, and R146 and R147 connected directly to pin 1 of V105 and pin 1 of V106, respectively.	*b.* Circuit simplification. The small resistance value of R148 and R149 was required for first type of rf exciter, but not for later types.
		c. Junction of R142 and R143 grounded, and C128, C129, J105, J106, R144, R145, and R142 removed.	*c.* To eliminate circuit provided for alternative method of adjusting MOD TRIM capacitor C131.
Afc unit	1	None.	
	2	R295 is 1 meg, R299 is 6,810, R300 is 82.5K.	To prevent unbalance and low gain of 60-cps modulator V124 because of possible cutoff of modulator.
	3	R295, R299, R300, R301, R302, and R303 are 549K, 12.1K, 82.5K, 5,110, 10K, and 5,110, respectively.	To prevent overloading 60-cps modulator V124 because of large error signals. The phase of the output of the overloaded modulator may prevent rotation of the afc motor.

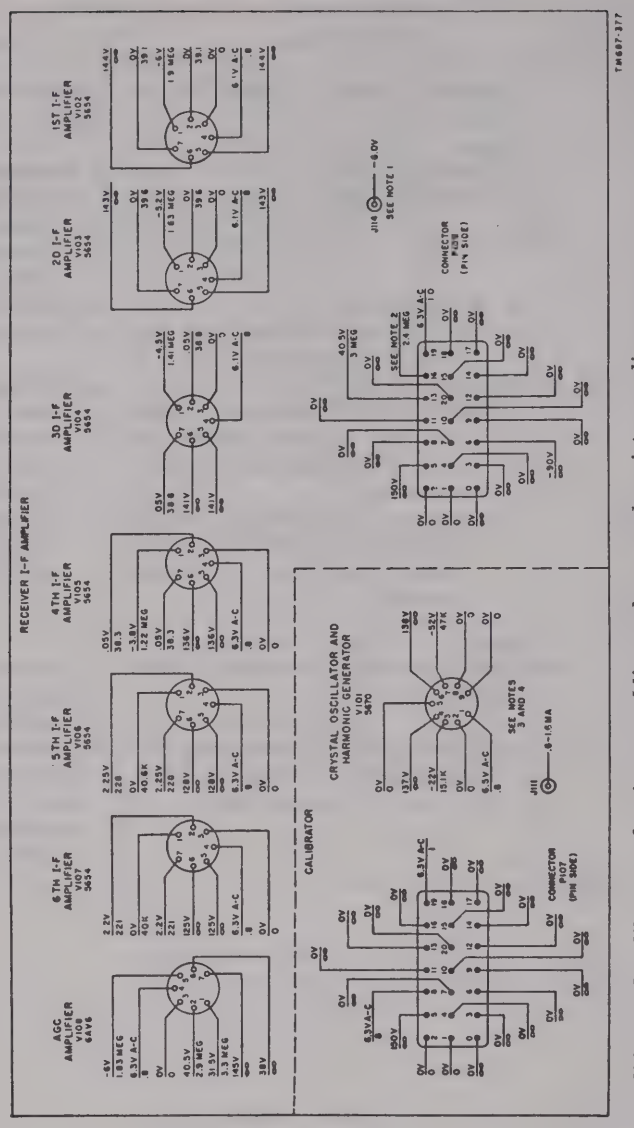

Figure 200. Receiver if amplifier and calibrator plug-in assemblies, voltage and resistance diagram.

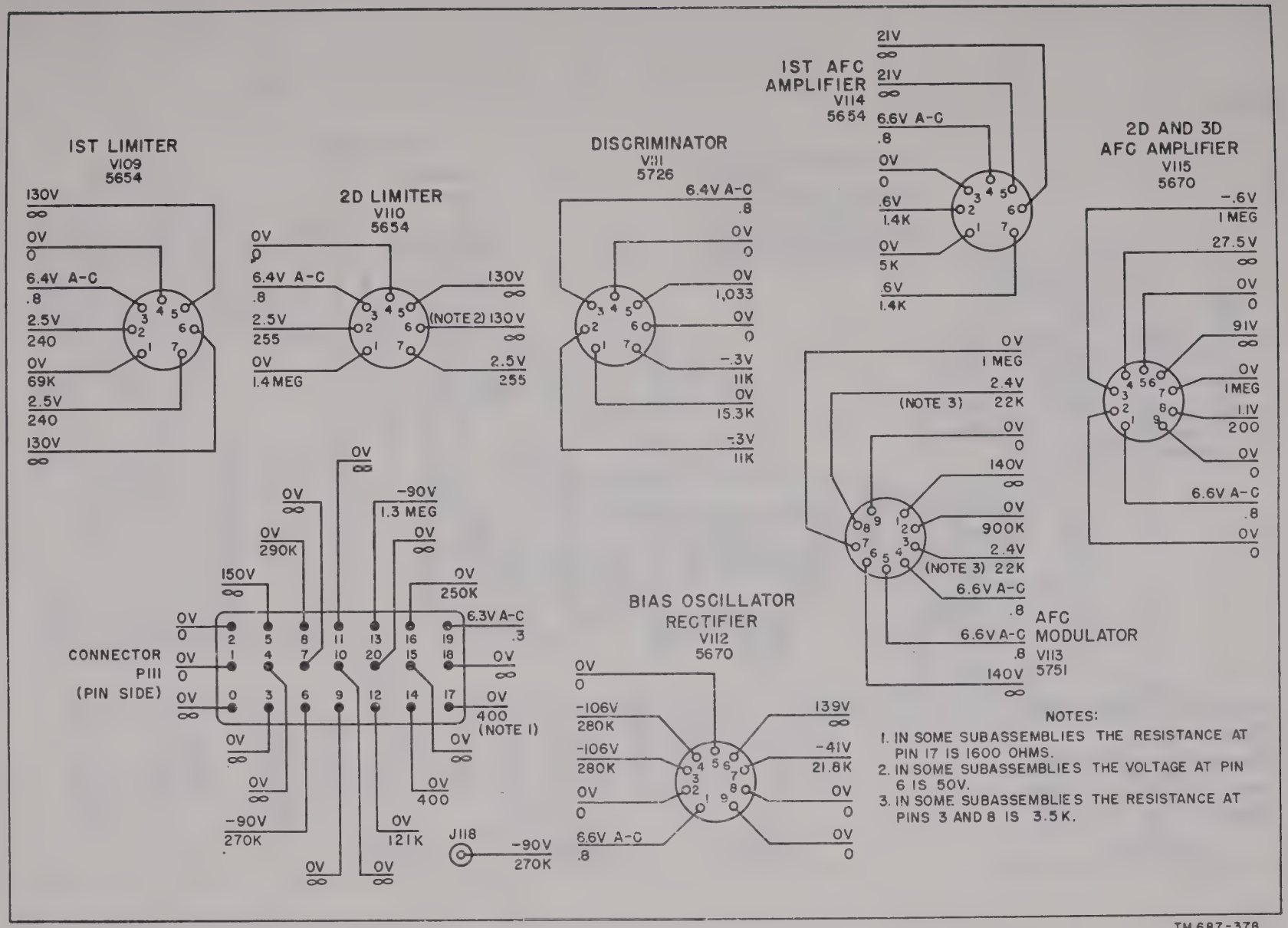

Figure 201. Limiter-discriminator-afc plug-in assembly, voltage and resistance diagram.

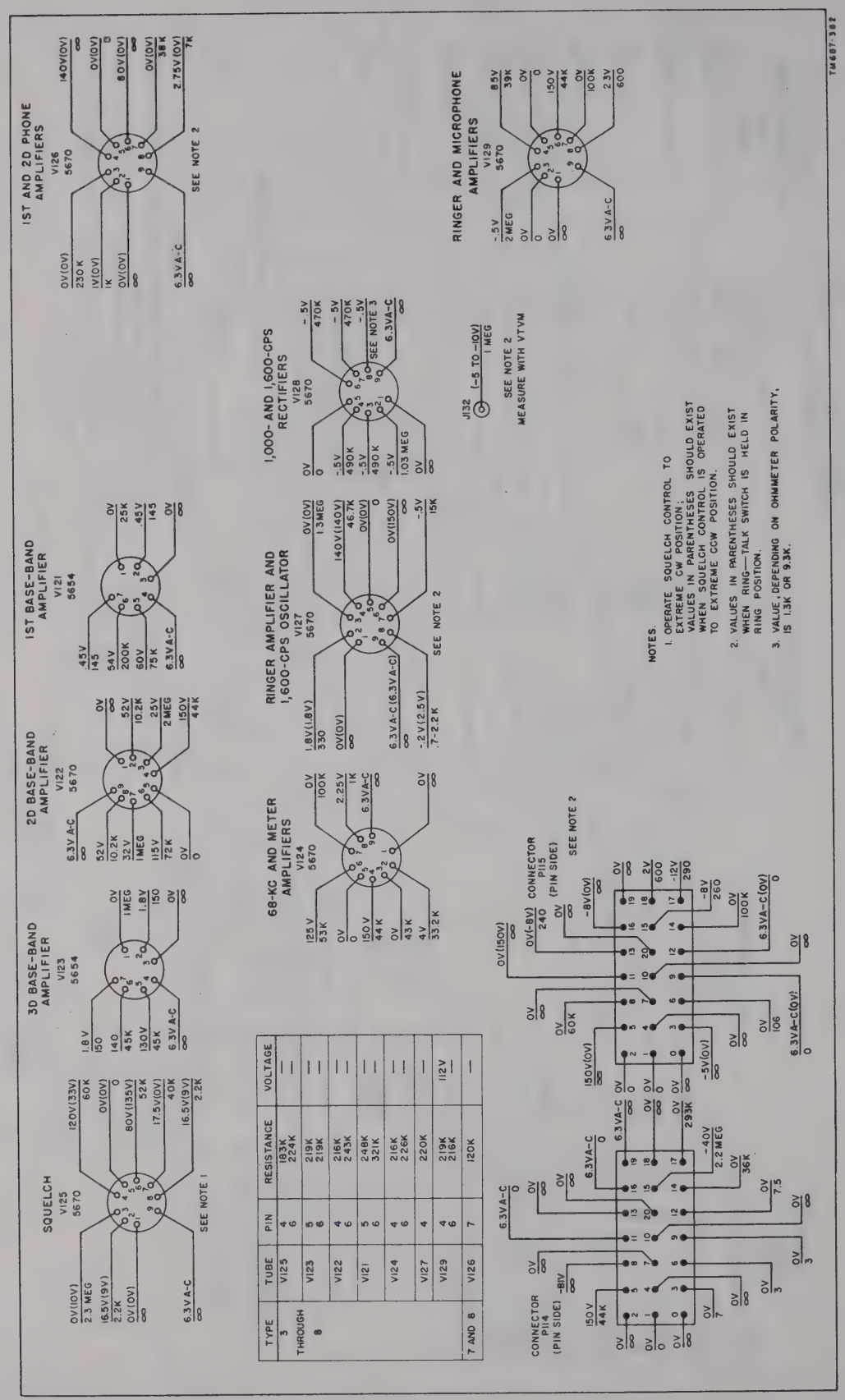

TYPE	TUBE	PIN	RESISTANCE	VOLTAGE
3 THROUGH 8	V125	4	183K	—
		6	224K	
	V123	5	219K	—
		8	219K	
	V122	4	216K	—
		6	243K	
	V121	5	248K	—
		6	321K	
	V124	4	216K	—
		6	226K	
	V127	4	220K	—
	V129	4	219K	112V
		6	216K	
7 AND 8	V126	7	120K	—

Figure 202. Receiver base-band amplifier plug-in assembly, voltage and resistance diagram.

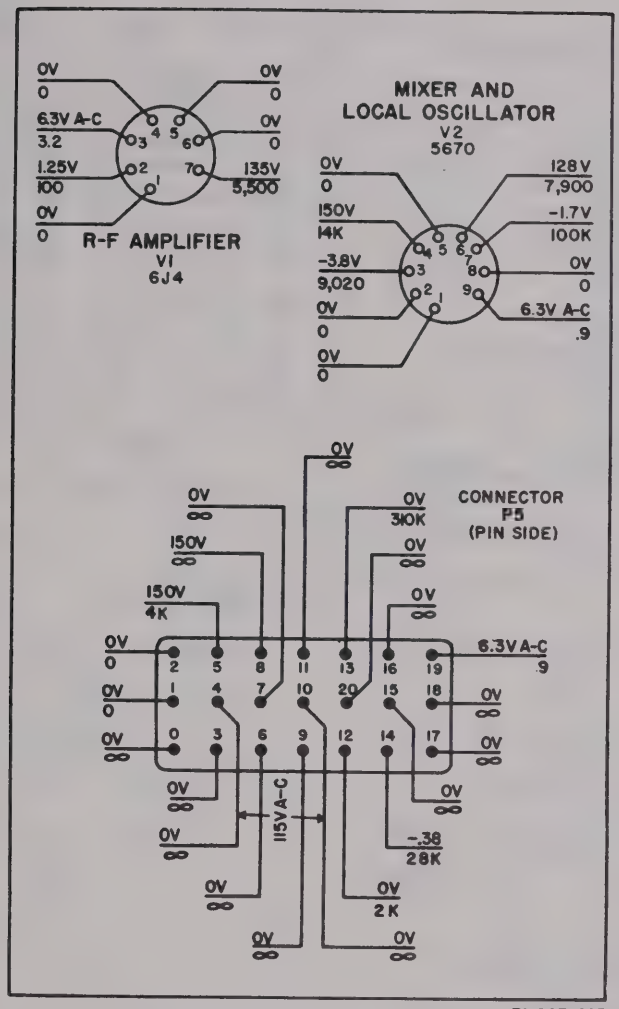

Figure 203. Receiver B-band tuner, voltage and resistance diagram

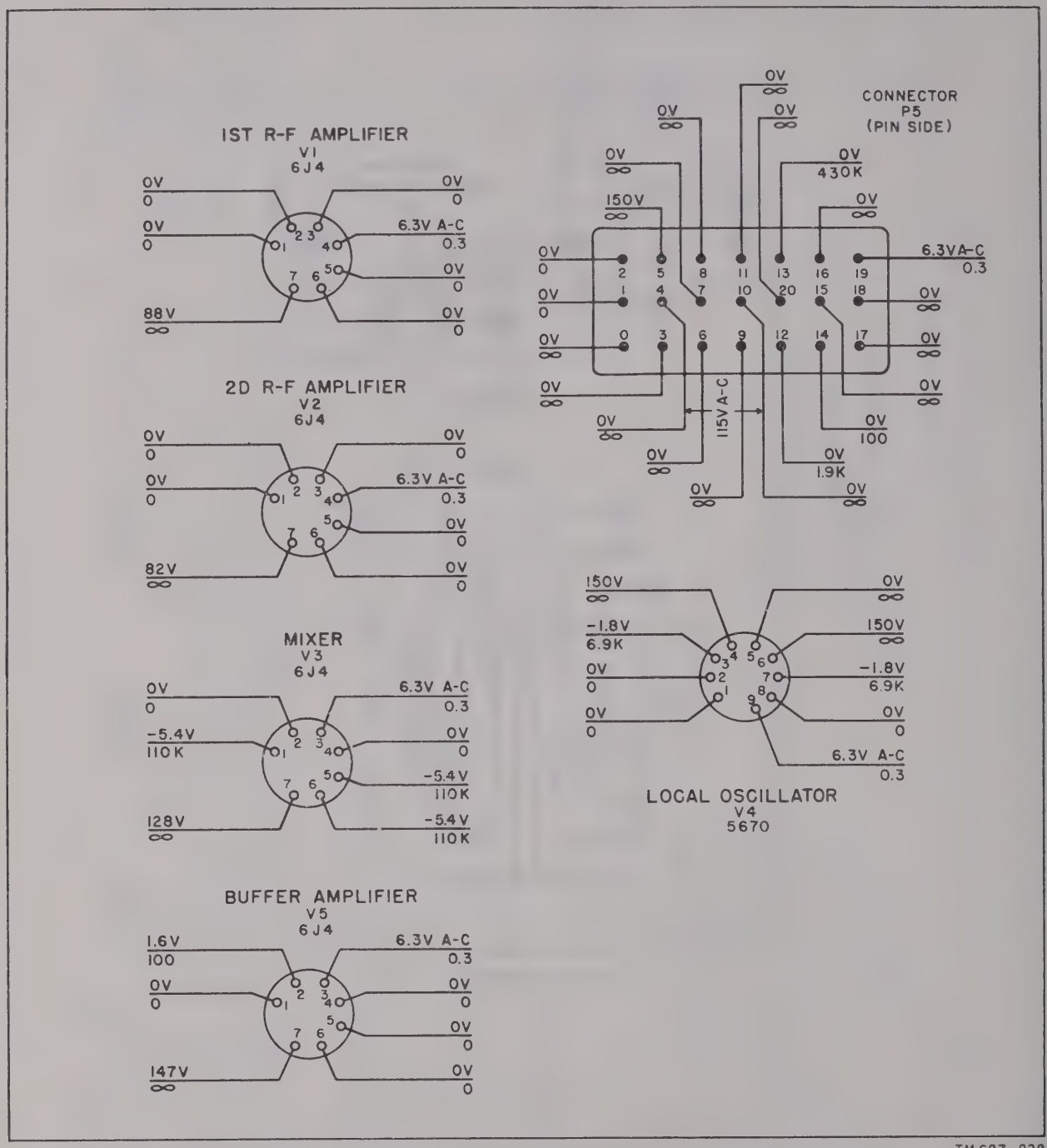

TM 687-228

Figure 204. Receiver C-band tuner, voltage and resistance diagram.

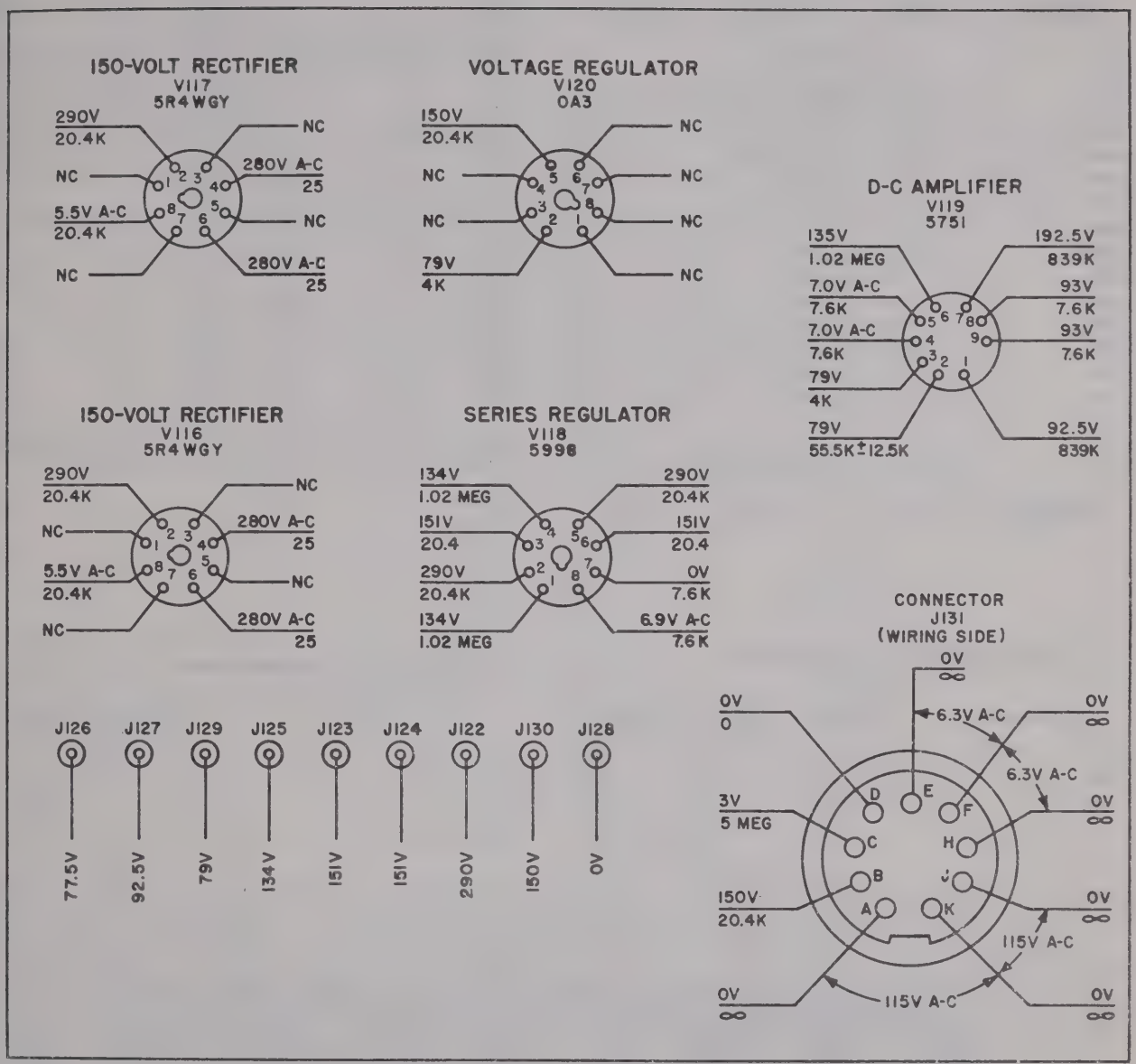

NOTES:

1. POWER SUPPLY MEASUREMENTS ARE INDICATED FOR 150-VOLT OUTPUT.
2. NC INDICATES NO CONNECTION.

TM 687-215

Figure 205. Receiver power supply, voltage and resistance diagram.

318. Dc Resistance of Coils, Transformers, and Relays

a. Coils of Transmitter.

Reference symbol	Resistance (ohms)	Reference symbol	Resistance (ohms)
L101	1.2	L120	.05
L102	1.2	L121	.04
L103	.05	L122	.04
L104	(1)	L123	.04
L105	.5	L124	.08
L106	.5	L125	.15
L107	(1)	L126	.15
L108	(1)	L127	.15
L109	(1)	L128	.08
L110	.5	L129	.15
L111	4.4	L130	.15
L112	12.6	L131	.03
L113	1.03	L132	.15
L114	.2	L133	.03
L115	2.0	L134	.13
L117	.5	L135	2.0
L118	.5	L136	1.2
L119	(1)	L137	1.2

[1] Negligible.

b. Transformers of Transmitter.

Reference symbol	Winding	Average resistance (ohms)	Maximum resistance (ohms)
T101	1–2	1.82	2.2
	2–3	1.65	2.0
	4–5	1.65	2.0
	5–6	1.82	2.2
	7–8	10.7	13
T102	1–2	39	45
	3–4	145	170
	3–5	300	350
T103	1–2	90	100
	3–4	.77	.85
T104	1–2	.28	
	3–4	.30	
	5–6	.32	
T105	1–2	----------	1,750
	3–4	----------	4,200

c. Relay of Transmitter.

Reference symbol	Resistance (ohms)
K101	8,000

d. Coils of Receiver.

Reference symbol	Resistance (ohms)	Reference symbol	Resistance (ohms)
L101	1.2	L120	.05
L102	1.2	L121	.05
L103	1.2	L122	.05
L104	.05	L123	.05
L105	1.2	L124	.05
L106	1.2	L125	1.2
L107	.39	L127	.06
L108	.05	L128	1.2
L110	.05	L129	1.2
L111	.06	L130	1.2
L112	.05	L131	.05
L113	.05	L132	.1
L114	.05	L133	1.2
L115	.05	L134	7
L116	.05	L135	75
L117	.05	L136	.05
L118	.05	L138*	.05
L119	.05	L139*	1.20

*For radio receivers on Order No. 32146–Phila–51 and Order No. 16811–Phila–51, serial numbers 48 and above.

e. Transformers of Receiver.

Reference symbol	Winding	Average resistance (ohms)	Maximum resistance (ohms)
T101	1–2	----------	1,750
	3–4	----------	4,200
T102	1–2	1.5	1.67
	3–5	50	56.4
	6–8	.11	.124
	9–10	.1	.108
	11–12	.11	.129
T103	1–2	3.84	4.8
	2–3	2.98	3.6
	4–5	3.07	3.7
	5–6	4.29	5.2
	7–8	63	75
	8–9	639	750
T104	1–2	----------	120
	3–4	----------	105
	5–6	----------	2,200
T105	1–2	39	45
	3–4	145	170
	3–5	300	350
T106	1–2	25	30
	3–4	100	116
	3–5	310	355
T107	1–2	----------	11.5
	3–4	----------	13
	5–6	----------	250

f. Relays of Receiver.

Reference symbol	Resistance (ohms)
K101	8,000
K102*	8,000

*For radio receivers on Order No. 32146–Phila–51 and Order No. 16811–Phila–51, serial numbers 65 and above, the resistance value of K102 is 1,000 ohms.

g. Transformer of Power Supply PP–685/TRC.

Reference symbol	Winding	Average resistance (ohms)	Maximum resistance (ohms)
T1	1–6	.53	.60
	6–7	6.8	7.70
	8–10	107	120
T2	1–2	24.5	27.8
	3–5	.032	.035
	6–7	.64	.70
T3	1–2	6.4	7.2
	3–4	.075	.083
	5–6	.1	.112
	7–8	.7	.775
T4	1–3	3	3.51
	4–6	70	80
T5	1–2	3.9	4.37
	3–4	.04	.046
	5–6	.03	.034

h. Relays of Power Supply PP–685/TRC.

Reference symbol	Resistance (ohms)
K1	35
K2	111 ±10%
K3	3
K4	2.2

i. Autotransformer.

Reference symbol	Winding	Average resistance (ohms)	Maximum resistance (ohms)
T1	1–7	.25	.285
	7–8	.36	.404

j. Coils of Receiver B-Band Tuner.

Reference symbol	Resistance (ohms)	Reference symbol	Resistance (ohms)
L1	.05	L9	[1]
L2	[1]	L10	[1]
L3	.05	L12	1.2
L4	.05	L13	.05
L5	.05	L14	1.2
L6	[1]	L15	.05
L7	[1]	L16	.05
L8	.04		

[1] Negligible.

k. Coils of Receiver C-band Tuner.

Reference symbol	Resistance (ohms)	Reference symbol	Resistance (ohms)
L1	.05	L12	.05
L2	.05	L13	.04
L3	.05	L14	.05
L4	[1]	L15	.05
L5	.05	L16	.05
L6	.05	L17	.05
L7	.05	L18	[1]
L8	[1]	L19	30
L9	[1]	L20	1.2
L10	.05	L21	.05
L11	.05	L22	1.2

[1] Negligible.

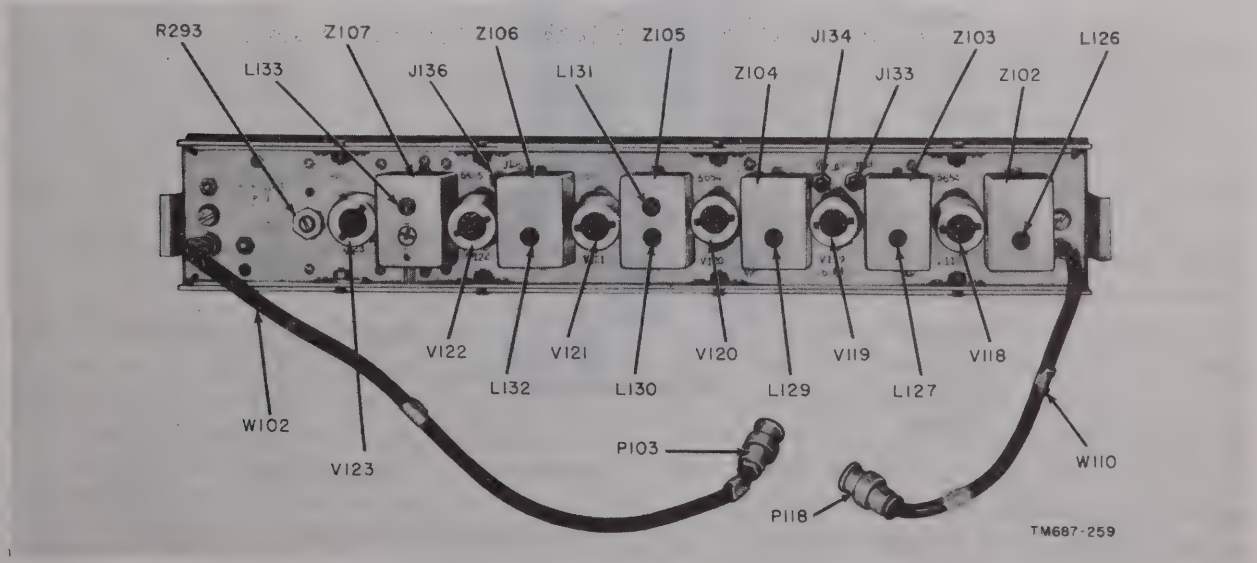

Figure 206. Transmitter if. amplifier plug-in assembly, top view.

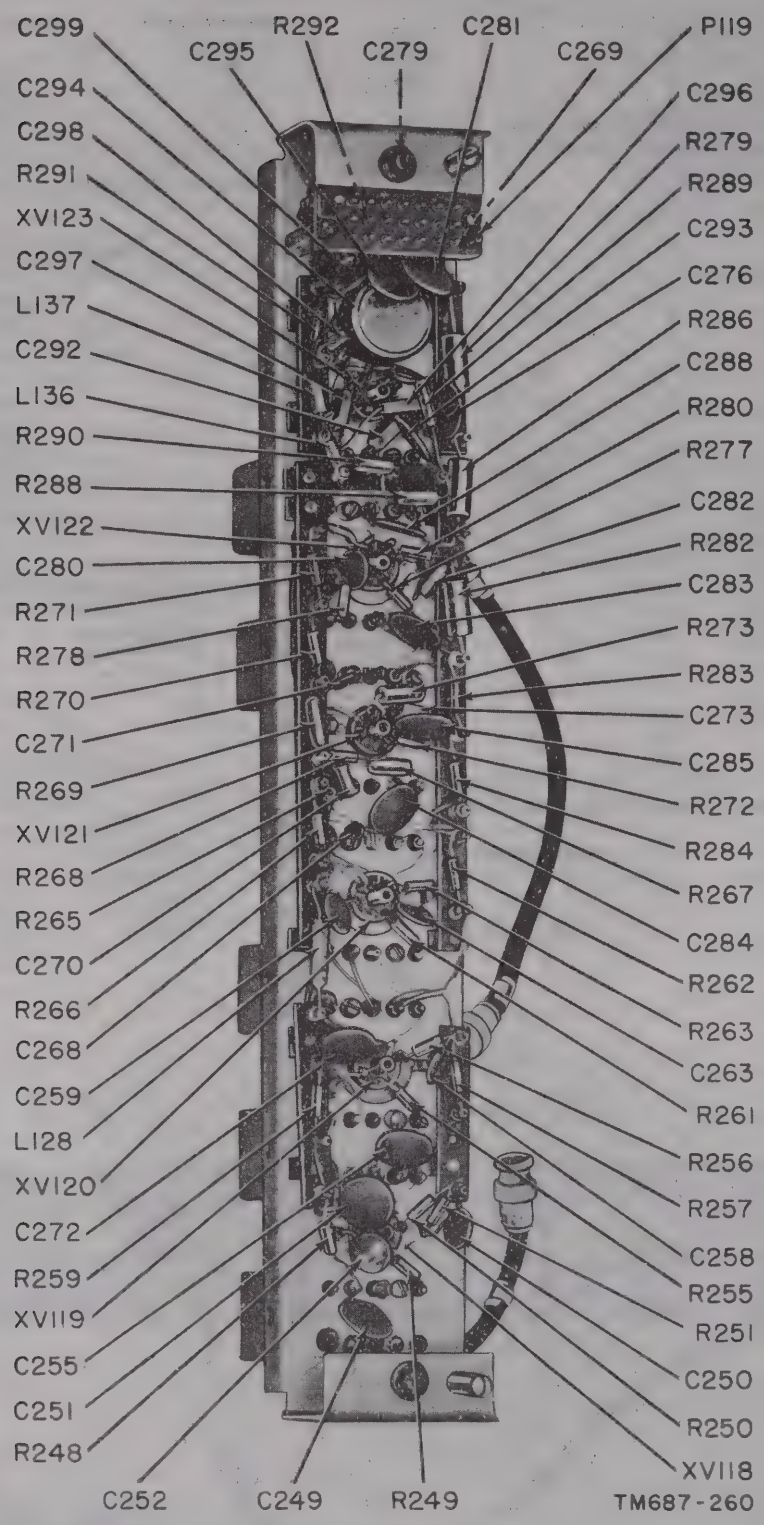

Figure 207. Transmitter if. amplifier plug-in assembly, bottom view.

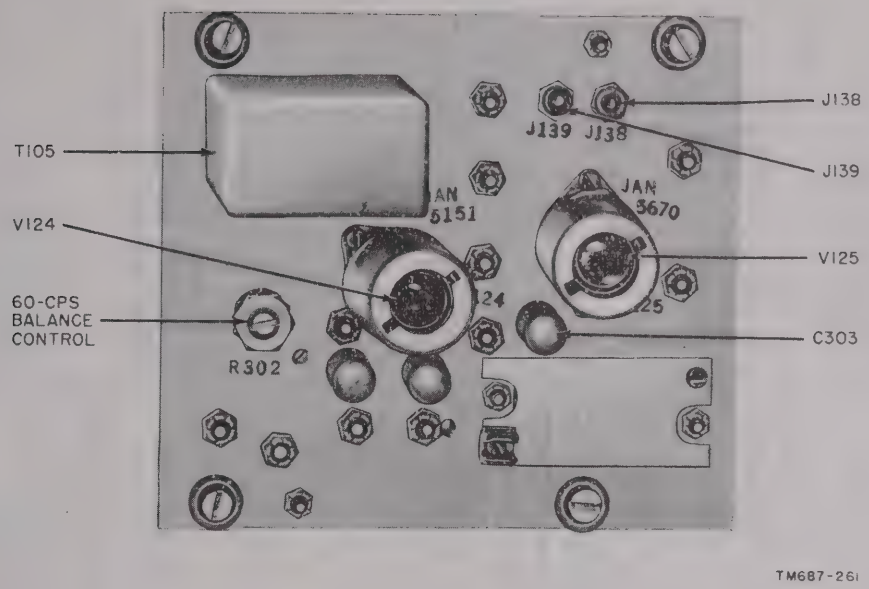

Figure 208. 60-cps modulator plug-in assembly, top view.

319. Test Equipment Required for Signal Substitution

The test equipment and parts necessary for performing signal substitution is listed in the chart below. Refer to the manual listed next to each test equipment in order to obtain the best operating results.

Test equipment	Manual
Signal Generator SG–71/FCC	TM 11–5088.
Voltmeter ME–30A/U*	
Electronic Multimeter TS–505/U	TM 11–5511.
Signal Generator AN/URM–70	
Signal Generator TS–497/URR	TM 11–5030.
Multimeter TS–352/U	TM 11–5527.
Transmission Measuring Set TS–569/FT	TM 11–2049.
Resistor, 75 ohms ±1%	
Resistor, 3,000 ohms ±5%	
Capacitor, .01 μf, 600v	

*Electronic Multimeter ME–6/U may be used if Voltmeter ME–30A/U is not available. TM 11–5549 covers the ME–6/U.

320. Performing Signal Substitution

Following the general procedure outlined in *a* below to perform signal substitution on both the transmitter and receiver. Use the information contained in *b* and *c* below to perform signal substitution on the transmitter and *d* through *h* below to perform substitution on the receiver.

a. General.

(1) Refer to the appropriate subparagraph below for the signal substitution chart containing information on the assembly to be tested.

(2) Use the appropriate test cables, and connect the assembly to be tested to the transmitter or receiver. Follow the connection procedure outlined in the paragraph on the final test of the same assembly.

(3) Connect the signal generator listed in the general instructions column between the terminal listed in the Signal generator connection column and chassis ground, unless otherwise specified.

(4) Adjust the frequency and output of the signal generator to the values listed in the fourth and fifth columns.

(5) Connect the output meter between the terminal specified in the Vtvm connection column and ground.

(6) Perform the special instructions if any.

(7) Check the output meter for a reading that corresponds to the normal indication of the last column.

b. Signal Substitution Chart, Transmitter Base-Band Amplifier.

General instructions	Stage	Signal generator			Vtvm connection	Special instructions	Normal indications (volts)
		Connection	Frequency	Output (volts)			
Use Signal Generator SG–71/FCC for 135-ohm balanced output impedance as a signal source, and Voltmeter ME–30A/U for metering indications.	Base-band ampl overall.	Term H and J of RECEIVER connector J101.	1 kc.	10 dbm.	Term 1 or 2 of connector P102.	Operate MOD ADJ control to extreme clockwise position.	.36
	Input.				Term 1 of transf T101.	Operate MEASURE switch to 1KC IN position.	1.26
Remove xmtr base-band ampl assy from xmtr and connect J102 and P101 with cable CX–2406/U.					Term. 7 of transf T101.		2.4
					Term. 3 of filter FL101.		2.4
					Wipe term. of INPUT ADJ control R101.		.44
Operate INPUT ADJ control R101 to position 15.					Junction of C101, R103, and R104.		.047
					Term. 1 of tube V101.		.047
	1st base-band ampl.				Term. 7 of tube V102.		.03
	2d base-band ampl.				Term. 3 of tube V102.		.47
	Meter ampl. input.				Pin 3 of tube V104.	Adjust MTR control for 1.3 V on vtvm.	1.3
	Ampl 1-kc input overall. 1-kc osc.				Term. 16 of test cable. Term. 3 or term. 5 of transf T102.	Operate MEASURE switch to 1KC ADJ position. Disconnect Signal Generator SG–71/FCC.	60
					Term. 1 of filter FL104.		12
					Term. 3 of filter FL104.		7.5
					Wiper term. of 1KC ADJ control R141.	Adjust R141 for reading of 0 db on M101.	2.5

b. Signal Substitution Chart, Transmitter Base-Band Amplifier (continued).

General instructions	Stage	Signal generator			Vtvm connection	Special instructions	Normal indications (volts)
		Connection	Frequency	Output (volts)			
	Input.				Pin 1 of V103.		.2
	1st meter ampl.				Pin 5 of V103.		12
	2d meter ampl.				Junct of C115 and R323.		12
					Pin 3 of V104.	Adjust MTR CAL control for 1.3 volts on vtvm.	1.3
	Meter amplifier overall.				Pin 2 of V104.		.9

c. Signal Substitution Chart, Transmitter Afc If. Amplifier.

General instructions	Stage	Signal generator			Vtvm connection	Special instructions	Normal indications (volts)
		Connection	Frequency (mc)	Output (volts)			
Remove afc if. amplifier from transmitter. Connect afc if. assy to xmtr with cable CX–2406/U.	Sig gen output determination.	P118.	10.125	Adjust from 130 to 1,300 uv for normal indication.	J134 TEST 1ST LIM GRID.		−5 dc.
Connect test jack J133 to ground.	Input.	P118.	10.125	Value determined above.	Pin 1 of V118.		*.001 to .01.
Remove tube V122 to prevent singing.	1st afc if.	Pin 1 of V118.	10.125	Value determined above.	Pin 1 of V119.		*.002 to .02.
Remove bottom cover of assembly.	2d afc if.	Pin 1 of V119.	10.125	Value determined above.	Pin 1 of V120.		*.002 to .02.
Use Signal Generator TS–497/URR as an input source.	3d afc if.	Pin 1 V120.	10.125	Value determined above.	Pin 1 of V121.		*.002 to .02.

c. Signal Substitution Chart, Transmitter Afc If. Amplifier (continued).

General instructions	Stage	Signal generator			Vtvm connection	Special instructions	Normal indications (volts)
		Connection	Frequency (mc)	Output (volts)			
	1st lim.	P118.		Value determined above.	J136 2D LIM TEST jack.	Replace tube V122. Replace cover of unit. Adjust signal gen output to value determined above.	−2 ±6.
	Discr.					Refer to final test of afc if. assembly for signal substitution of discr. (par. 346).	

*Depends upon output of signal generator.

d. Signal Substitution Chart, Amplifier-Converter AM–913/TRC.

General instructions	Stage	Signal generator			Vtvm connection	Special instructions	Normal indications
		Connection	Frequency (mc)	Output (volts)			
Remove the tuner from the receiver and connect tuner assy to receiver with cable CX–2406/U. Use Signal Generator AN/URM–70. Use Electronic Multimeter TS–505/U. Use Multimeter TS–352/U as a microammeter.	Overall gain of tuner.	Jack J1.	149.750	.01	Jack J2.	Connect a 75-ohm terminating resistor between connector J2 and ground.	.12 volt minimum.
	Rf ampl.	Jack J1.	149.750	.1	Pin 7 of tube V1.	Connect a .1-μf capacitor between pin 4 of tube V2 and ground.	1.5 ±.6 volts.
	Local oscillator.	Not connected.			Not connected.	Remove capacitor from pin 4 of tube V2. Measure between term. 14 and 1 of test cable with microammeter.	5 to 50 μa.
		Not connected.			Not connected.	Measure between term. 13 and 1 of test cable with microammeter.	5 to 50 μa.

e. Signal Substitution Chart, Amplifier-Converter AM–914/TRC.

General instructions	Stage	Signal generator			Vtvm connection	Special instructions	Normal indications
		Connection	Frequency (mc)	Output (volts)			
Removes the tuner from the receiver and connect tuner assy to receiver with cable CX–2406/U. Adjust RF AMP and OSC controls to channel 160. Use Multimeter TS–352/U as a microammeter.	Overall tuner gain.	Jack J1.	359.500	.01	Jack J2.	Connect a 75-ohm terminating resistor between connector J2 and ground.	1.5 volts minimum.
	1st rf ampl.	Jack J1.	359.500	.03	Pin 7 of tube V1.		.35 ±.14 volt.
	1st and 2d rf ampl.	Jack J1.	359.500	.03	Pin 7 of tube V2.	Remove tube V4.	1 ±.4 volt.
	1st and 2d rf ampl and tuned circuits.	Jack J1.	359.500	.03	Pin 2 of tube V3.	Remove tube V4.	.09 ±.4 volt.
	Local osc.	Not connected.			Not connected.	Replace tube V4. Connect microammeter between term. 14 and 1 of connector P5.	5 to 50 μa.
	Local osc and buffer ampl.	Not connected.			Not connected.	Connect microammeter between term. 13 and 1 of connector P5.	5 to 50 μa.

f. Signal Substitution Chart, Receiver If. Amplifier Assembly.

General instructions	Stage	Signal generator			Meter connection	Special instructions	Normal indications μa.
		Connection	Frequency (mc)	Output (volts)			
Connect the if. amplifier to the receiver with cable CX–2406/U. Use Signal Generator TS–497/URR. Use Multimeter TS–352/U as TS–352/U as microammeter.	6th if. ampl.	Pin 1 of tube V107.	30	.05	Term. 11 of connector P111 and ground.	SQUELCH control operated to extreme counterclockwise position.	8 ±3.
	5th if. ampl.	Pin 1 of tube V106.	30	.0075			8 ±3.

f. Signal Substitution Chart, Receiver If. Amplifier Assembly (continued).

General instructions	Stage	Signal generator			Meter connection	Special instructions	Normal indications μa.
		Connection	Frequency (mc)	Output (volts)			
	4th if. ampl.	Pin 1 of tube V105.	30	.0013			8 ±3.
	3d if. ampl.	Pin 1 of tube V104.	30	.00023			8 ± .
	2d if. ampl.	Pin 1 of tube V103.	30	.00005			8 ±3.
	1st if. ampl.	Connector J113.	30	.000001			8 ±3
	Agc.	Connector J113.	30	.01		Check all six if. amplifier stages first.	30 ±5.

g. Signal Substitution Chart, Limiter, Discriminator, and Afc Assembly.

General instructions	Stage	Signal generator			Meter connection	Special instructions	Normal indications
		Connection	Frequency	(Output volts)			
Connect the limiter discriminator, and afc assy to the receiver with cable CX-2406/U. Use Multimeter TS-352/U to measure microamperes.	1st limiter.	Pin 1 of tube V109.	30 mc.	.007	Term. 17 of connector P111.	Turn SQUELCH control R170 to extreme CCW position.	1 ±.4 μa.
	Input and 1st limiter.	Jack J116.	30 mc.	.07	Term. 17 of connector P111.	Turn SQUELCH control R170 to extreme CCW position.	1 ±.4 μa.
Use Electronic Multimeter TS-505/U to measure volts. Use Signal Generator TS-497/URR as the signal source.				.05	Term. 17 of connector P111.	Operate SQUELCH control R170 to extreme CW position.	8 ±3 μa.
	2d limiter and discriminator.	Jack J116.	29.1 or 30.9 mc.	.05	Term. 8 of connector P111.	Operate SQUELCH control R170 to extreme CW position.	30 ±12 μa.

g. Signal Substitution Chart, Limiter, Discriminator, and Afc Assembly (continued).

General instructions	Stage	Signal generator			Meter connection	Special instructions	Normal indications
		Connection	Frequency	Output (volts)			
Use Signal Generator SG–71/FCC as the signal source.	3d afc ampl.	Pin 7 of tube V115B.	60 cps.	1.5	Term. 12 of connector P111.	Connect a 3,000-ohm resistor between term. 12 and 1 of connector P111.	5.5 ±2.3 volts.
	2d afc ampl.	Pin 3 of tube V115A.	60 cps.	.07	Term. 12 of connector P111.	Connect a 3,000-ohm resistor between term. 12 and 1 of connector P111.	5.5 ±2.3 volts.
	1st afc ampl.	Pin 1 of tube V114.	60 cps.	.003	Term. 12 of connector P111.	Disconnect wire from term. 3 of transformer T101.	5.5 ±2.3 volts.
	Afc mod.	Not connected.			Term. 12 of connector P111.	Recónnect wire to term. 3 of trans T101. Apply +2 volts to junction of resistors R193 and R194.	4.5 ±1.8 volts.
	Bias supply.	Not connected.			Connector J118.		−90 volts minimum.

h. Signal Substitution Chart, Receiver Base-Band Amplifier Assembly.

General instructions	Stage	Signal generator			Vtvm connection	Special instructions	Normal indications
		Connection	Frequency (kc)	Output (volts)			
Connect the base-band amplifier assy to the receiver with two cables CX–2406/U. Use Transmission Measuring Set TS–569/FT for db measurements. Connect it to term. 6 and 9 of connector P114. Use Signal Generator SG–71/FCC as the signal source.	Squelch.	Not connected.			Pin 6 of tube V125.	Adjust SQUELCH control until +15 volts dc appears at term. 15 of connector P114.	+145 volts (relay K101 releases).
						Adjust SQUELCH control until +10 volts dc appears at term. 15 of connector P114.	+85 volts (relay K101 operates).

h. Signal Substitution Chart, Receiver Base-Band Amplifier Assembly (continued).

General instructions	Stage	Signal generator			Vtvm connection	Special instructions	Normal indications
		Connection	Frequency (kc)	Output (volts)			
Use Voltmeter ME–30A/U to measure the signal generator output.	Meter ampl.	Term. 14 of connector	1	.435	Term. 14 of connector P114.	Adjust the ADJ METER control to obtain normal indication.	.15 volt dc.
Use Electronic Multimeter TS–505/U to measure d-c volts.	68-kc ampl.	Term. 1 of filter FL101.	68	.39	Term. 18 of connector P114.	Connects a 100K resistor between term. 18 and 1 of connector P114.	.435 volts ac
	3d base-band ampl.	Pin 1 of tube V123.	1	.15	Connect transmitter Measuring Set TS–569/FT, or a vtvm shunted by a 135-ohm resistor across terminals 6 and 9 of connector P114.	Short resistor R237.	0 dbm on the TS–569/FT or .3674 volt on the vtvm.
	2d base-band ampl.	Pin 3 of tube V122.	1	.025		Short resistor R237.	
	1st base-band ampl.	Pin 1 of tube V121.	1	.0078		Unshort resistor R237.	
		Pin 1 of tube 121.	1	.0006		Short resistor R237.	
	Microphone ampl.	Term. 7 of tube V129.	1.0	1.16	Term. 18 of connector P115.		.78 ±.32 volt.
	Ringer.	Not connected.			Pin 4 of tube V129.	Connect a jumper between jack J132 and ground. Relay K102 remains in normal operated position.	+85 volts maximum.
	Ringer ampl. and rectifier circuits.	Pin 3 of tube V127A.	1.6	1.28	Jack J132.	Place switch S105 in TALK position.	−7 volts maximum.
			1.0	1.28	Jack J132.	Remove tube V129.	+5 volts minimum.
	1,600-cps osc.	Not connected.			Term. 18 of connector P115.	Hold switch S105 on on RING position.	2.45 ±1 volts.
	1st and 2d microphone ampl.	Term. 8 of connector P115.	1.0	.39	Term. 6 of connector P115.	Turn switch S105 to TALK position.	.157 ±.080 volt.

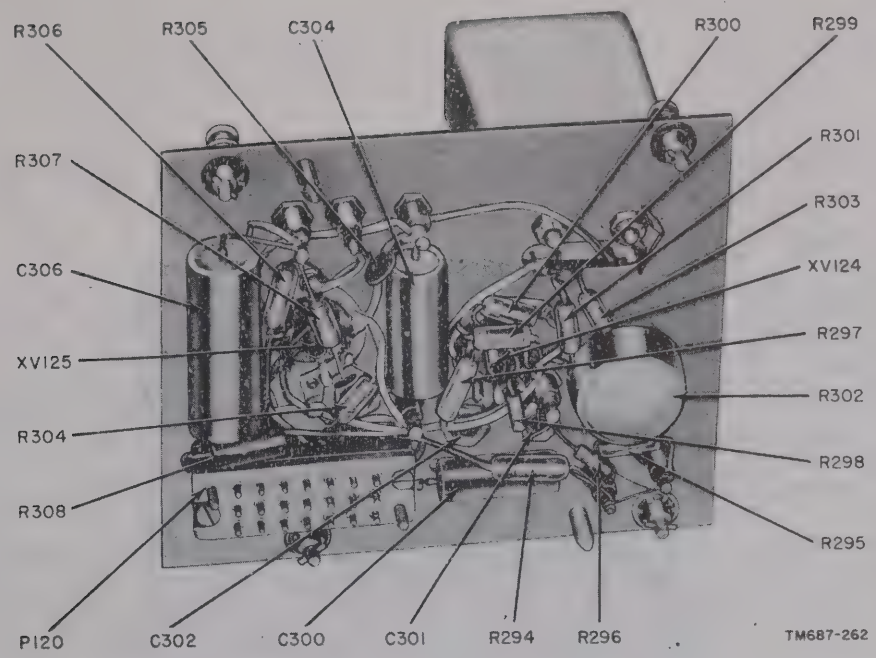

Figure 209. 60-cps modulator plug-in assembly, bottom view.

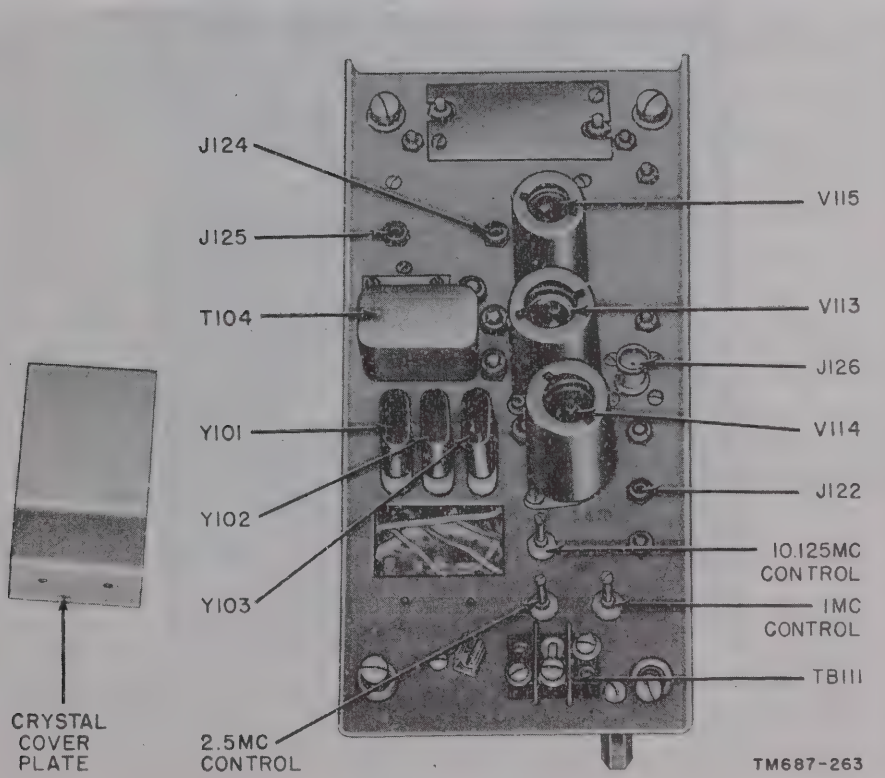

Figure 210. Crystal oscillator plug-in assembly, top view.

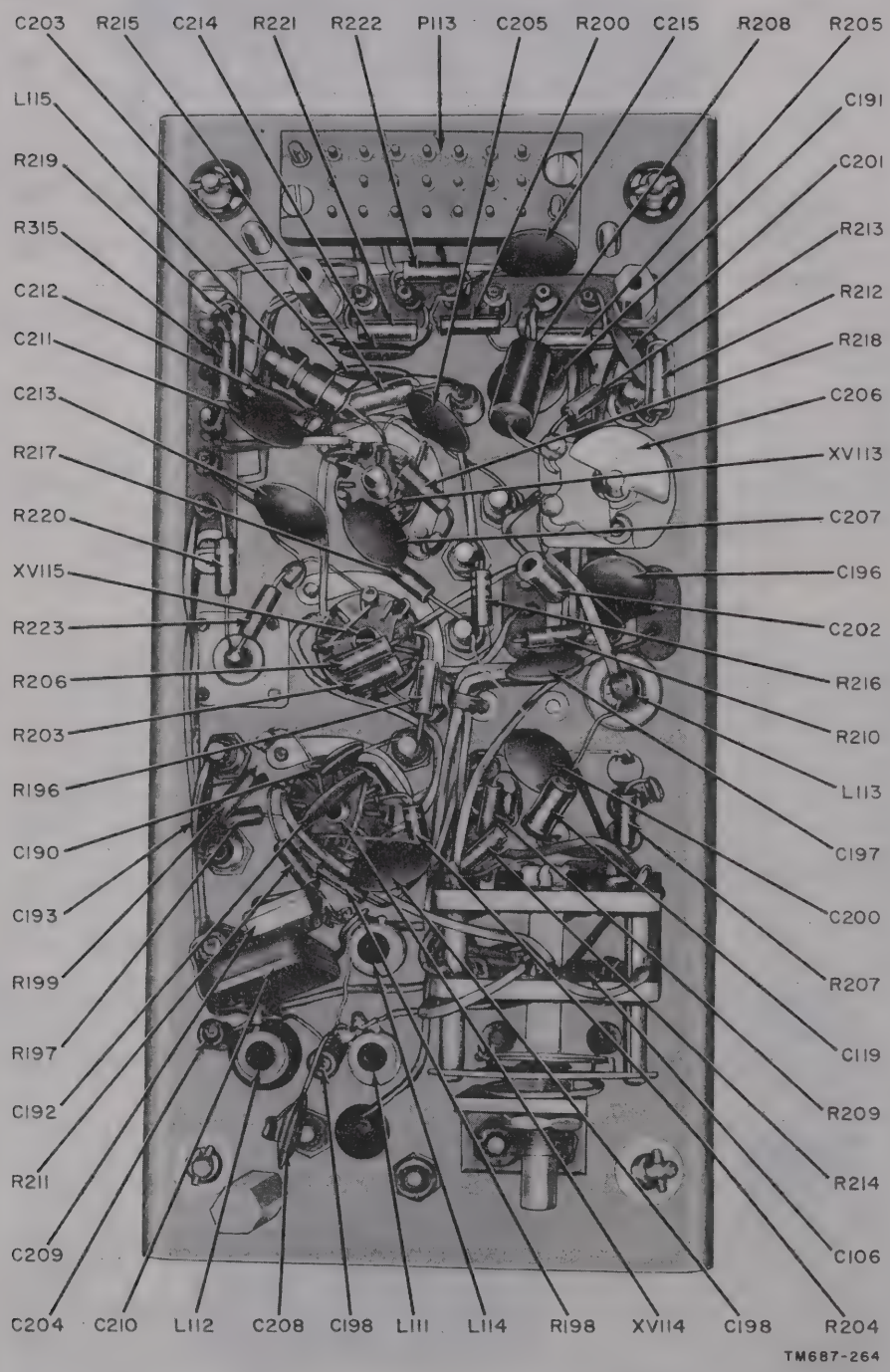

Figure 211. Crystal oscillator plug-in assembly, bottom view.

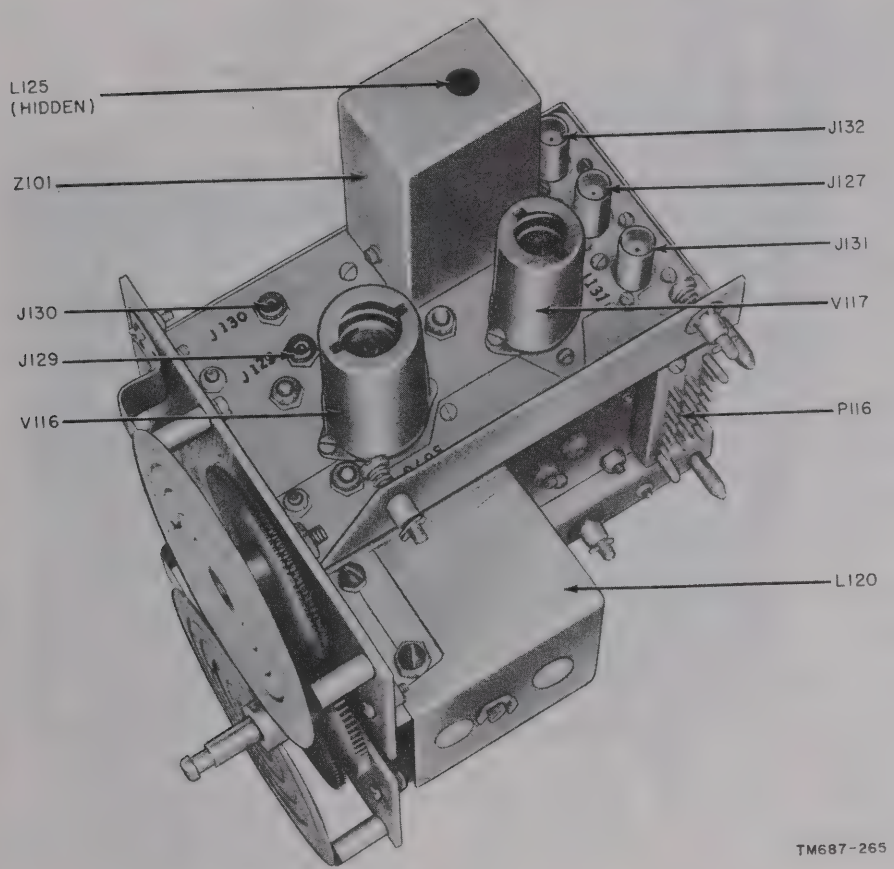

Figure 212. Pulsed oscillator plug-in assembly, top view.

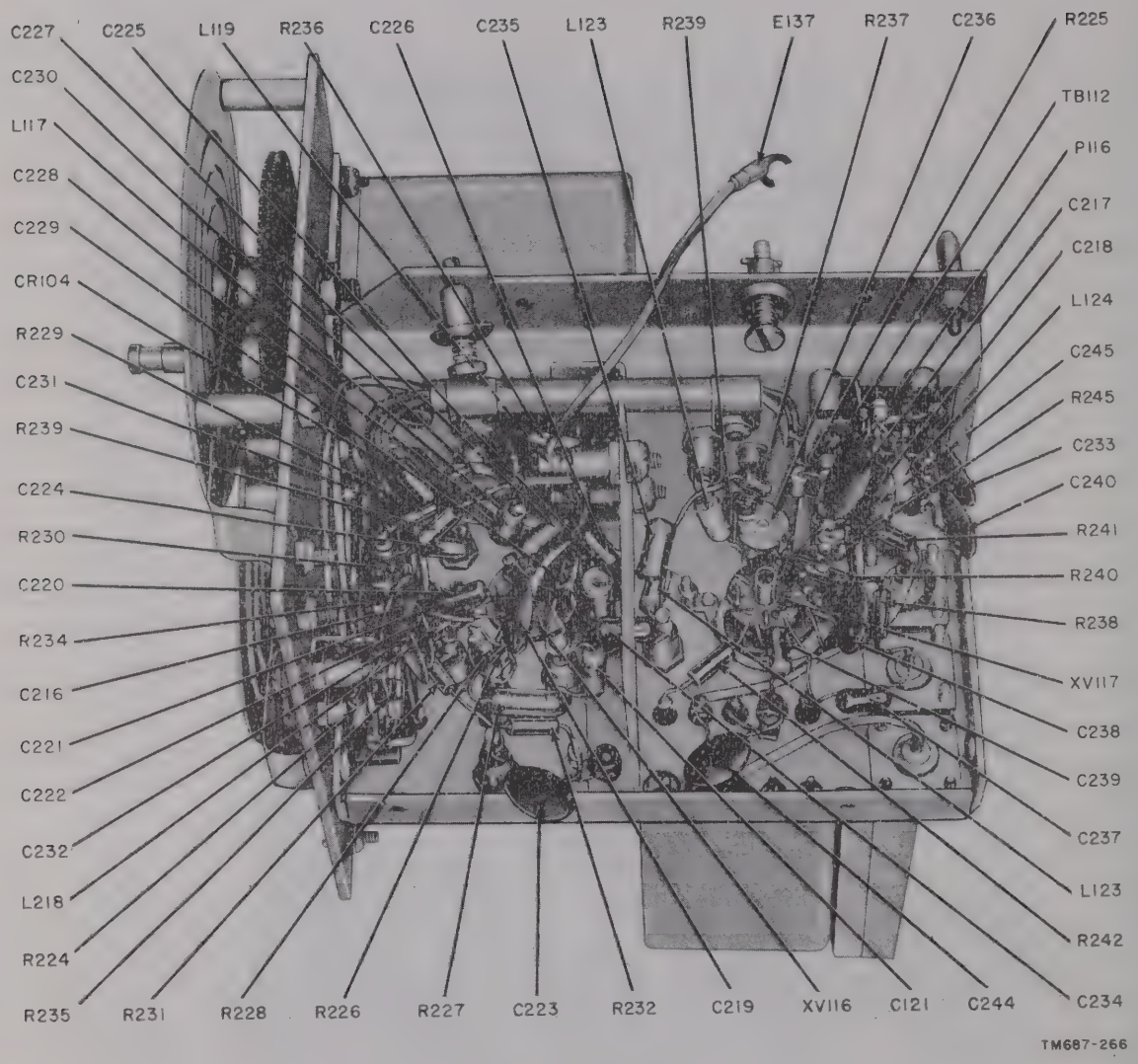

Figure 213. Pulsed oscillator plug-in assembly, bottom view.

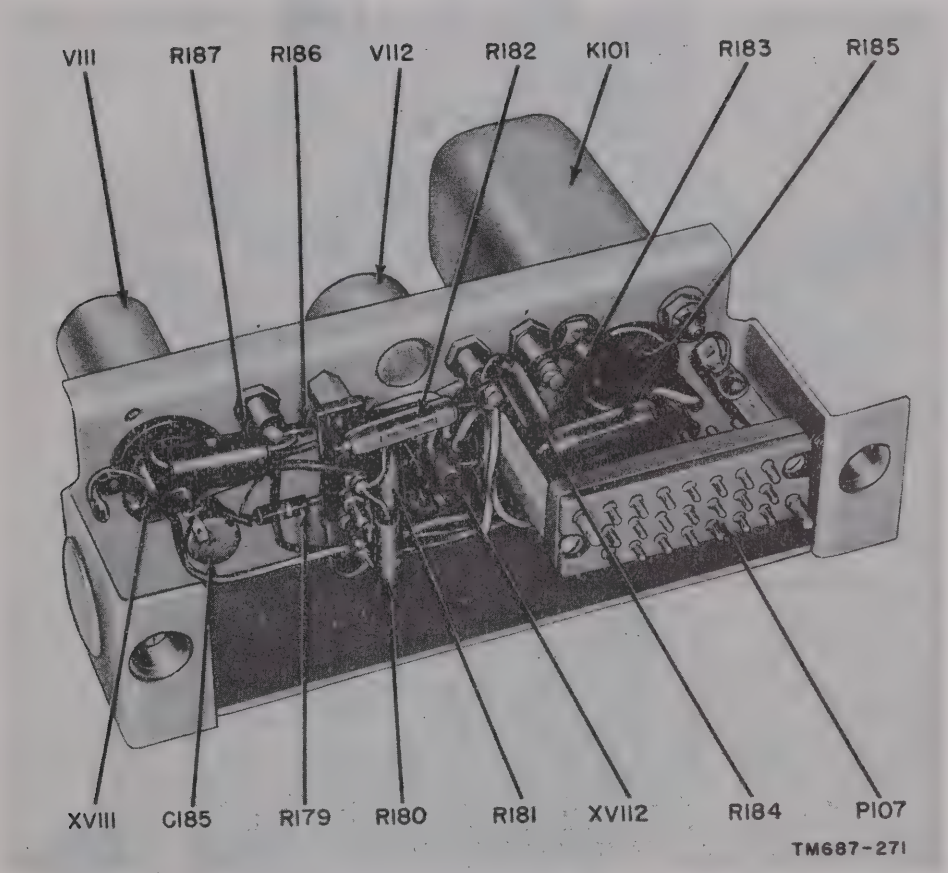

Figure 214. Transmitter alarm plug-in assembly.

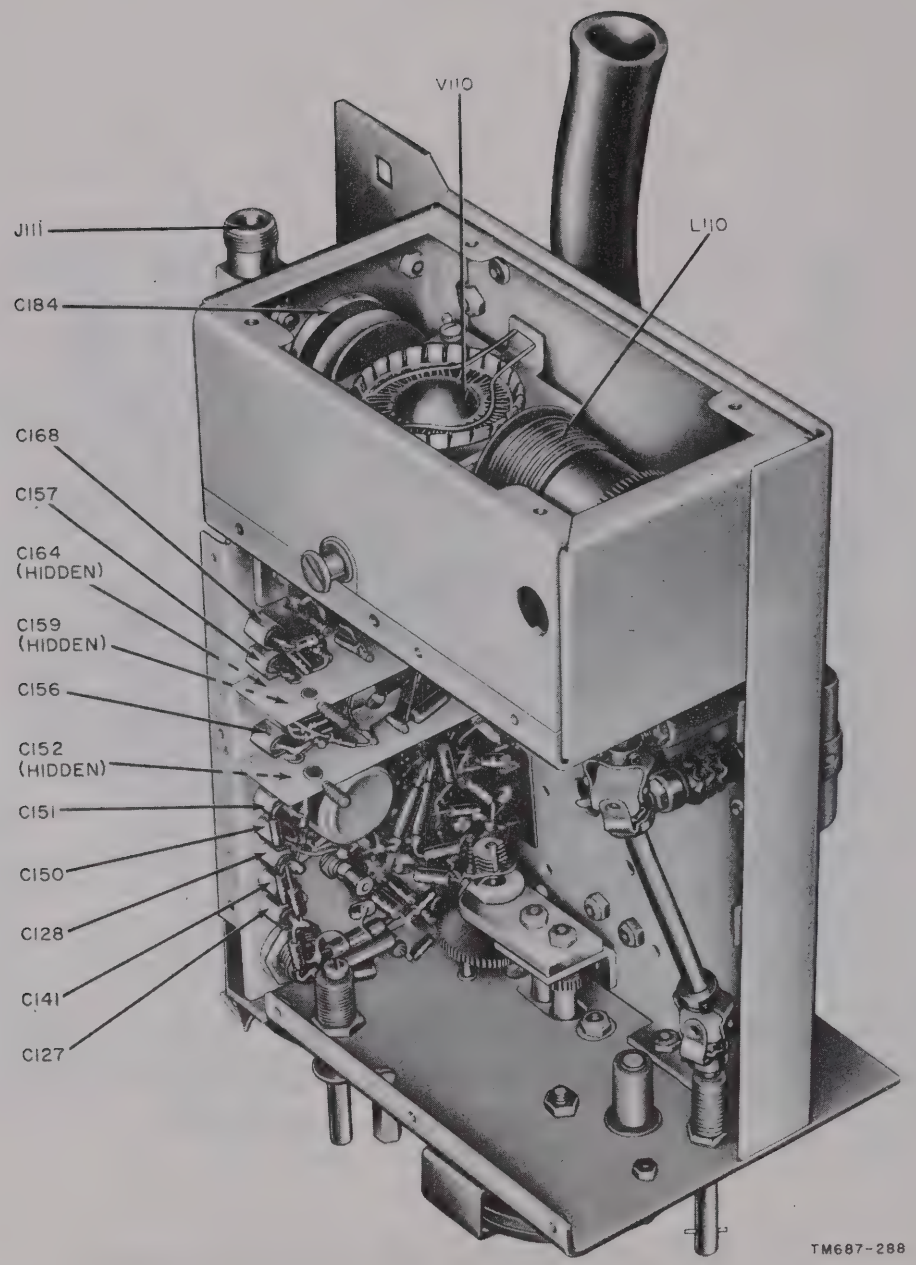

Figure 215. Rf exciter plug-in assembly, top view.

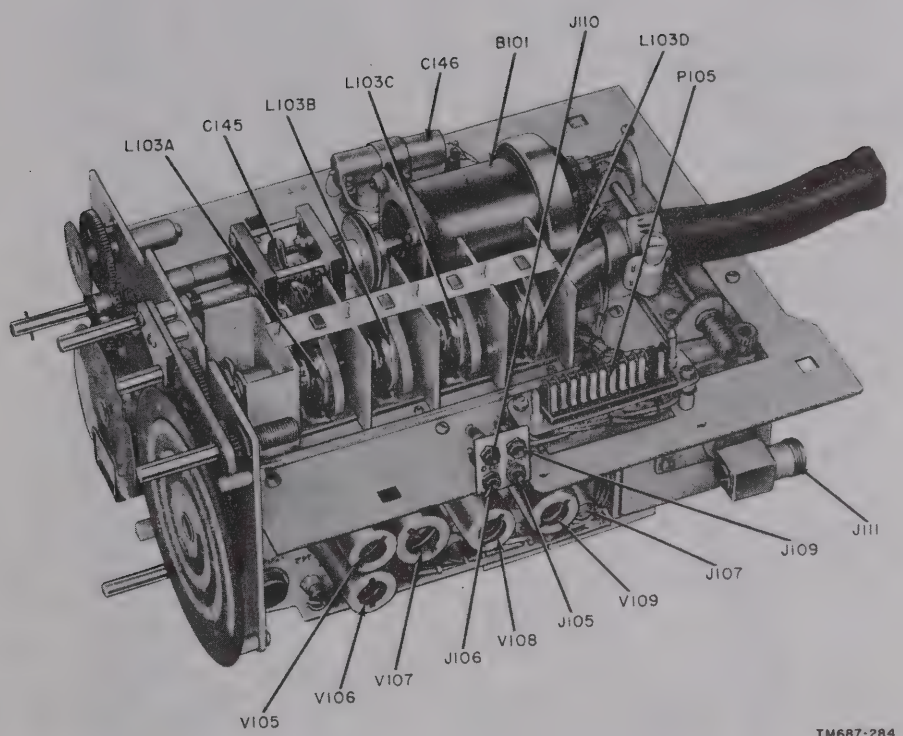

Figure 216. Rf exciter plug-in assembly, bottom view.

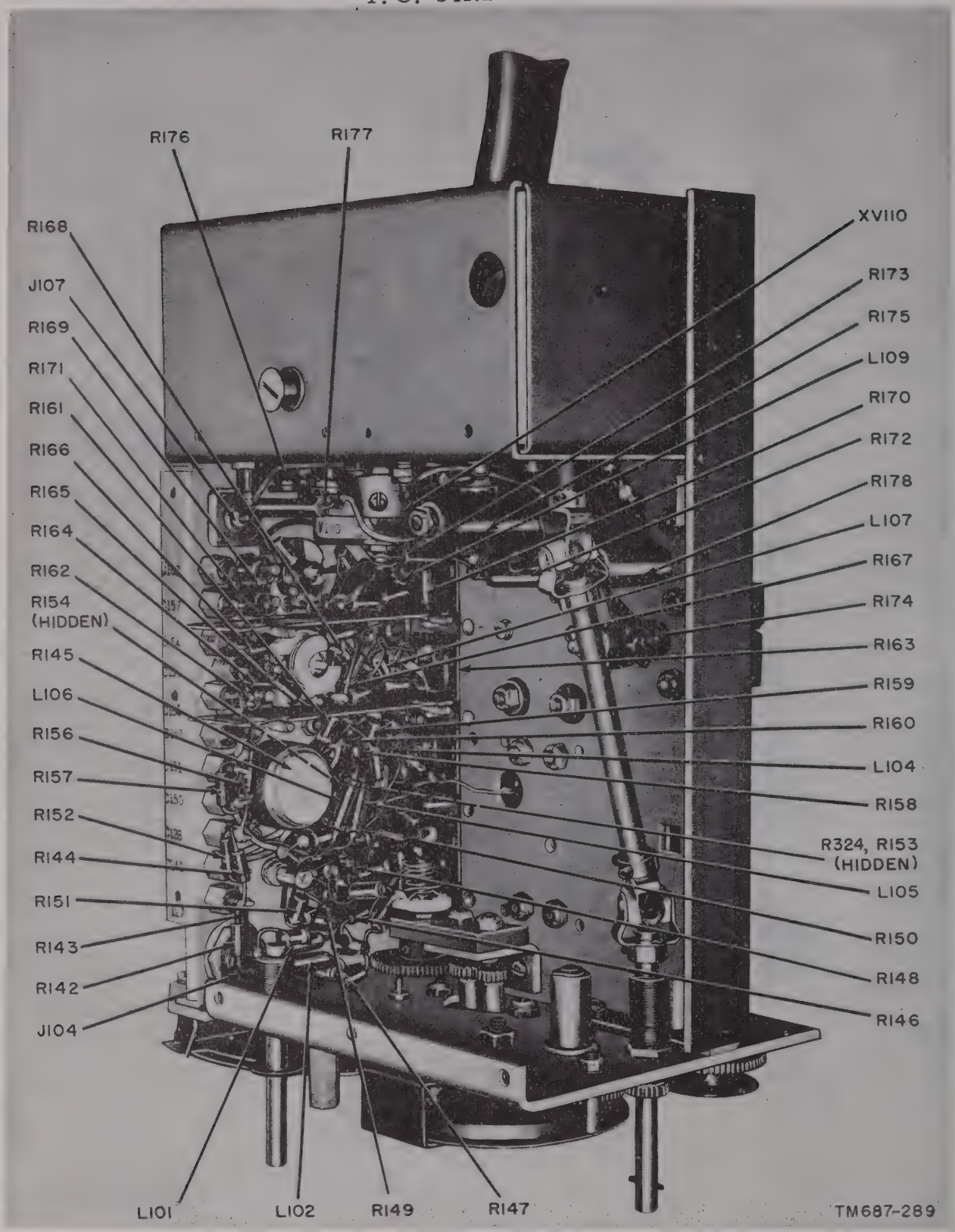

Figure 217. Rf exciter plug-in assembly, right-oblique view showing resistors.

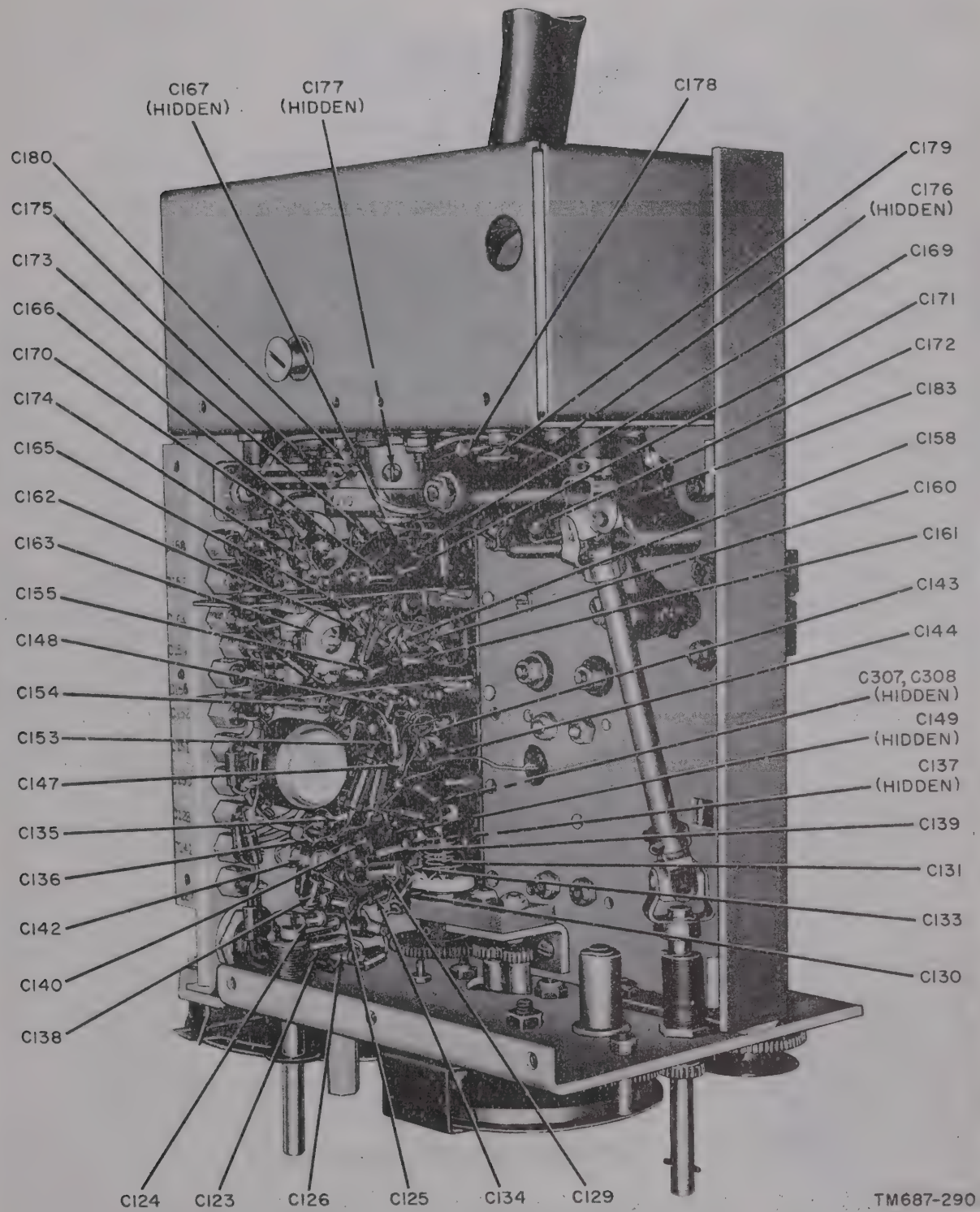

Figure 218. Rf exciter plug-in assembly, right-oblique view showing capacitors.

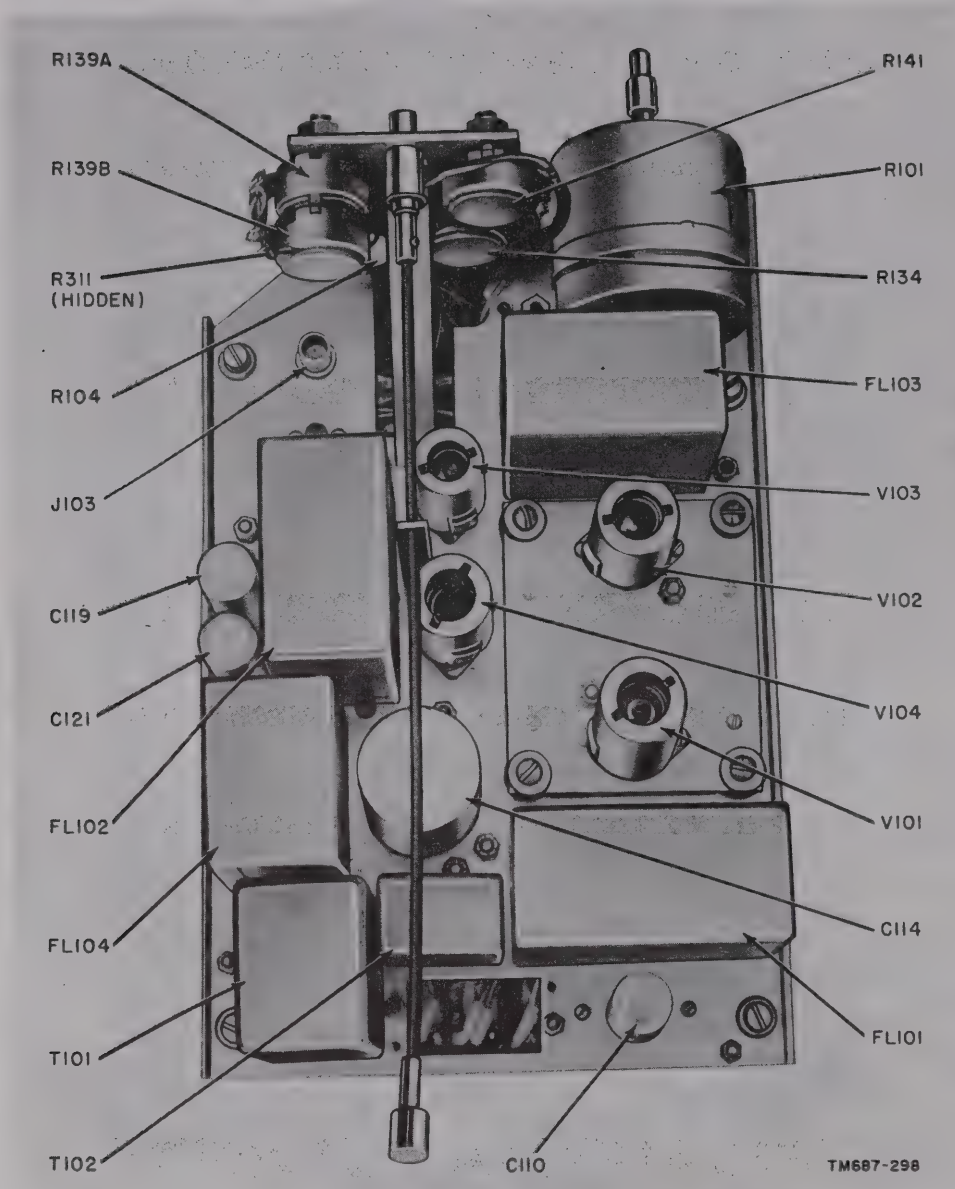

Figure 219. Transmitter base-band amplifier plug-in assembly, top view.

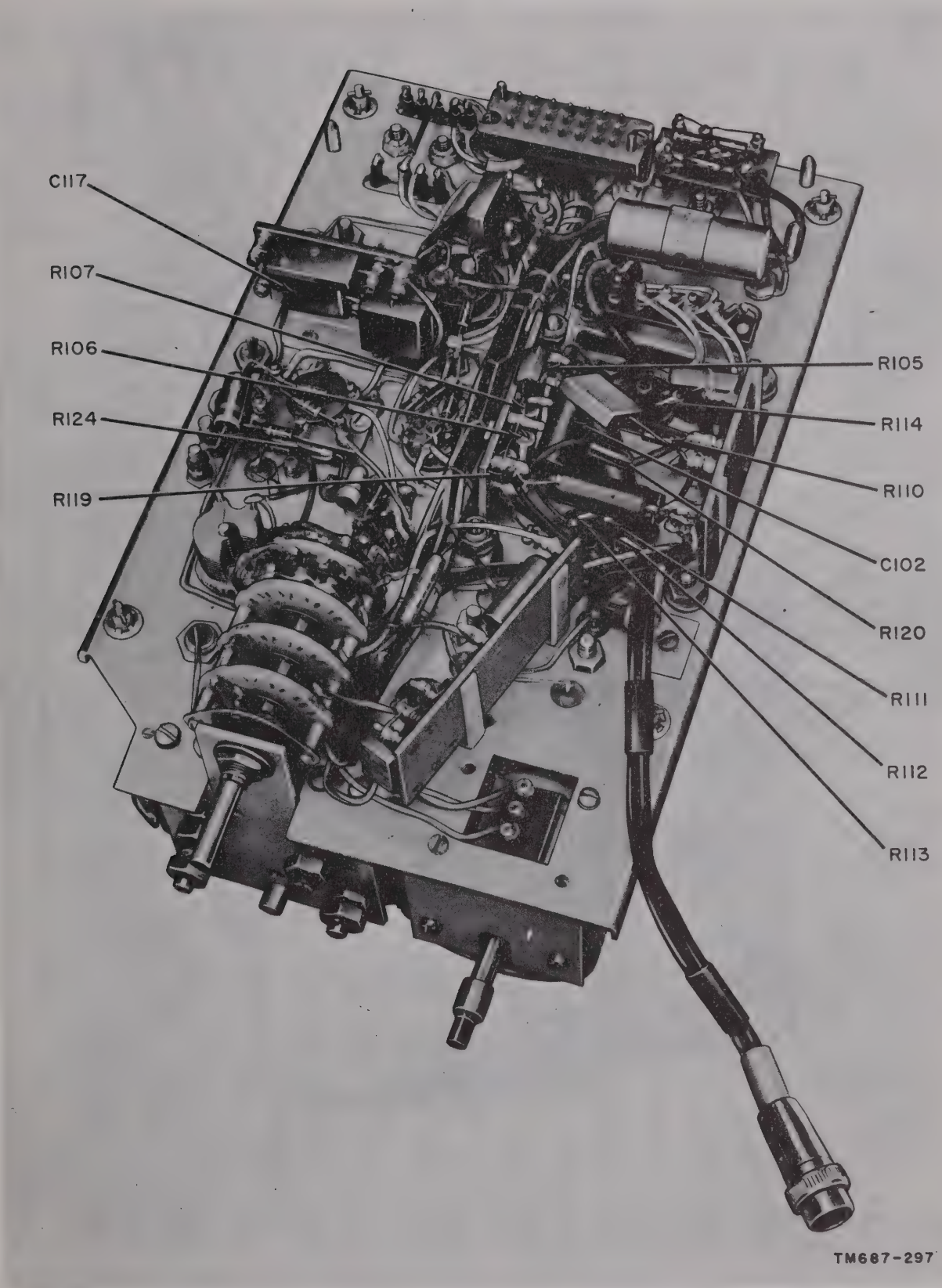

Figure 220. Transmitter base-band amplifier plug-in assembly, bottom view.

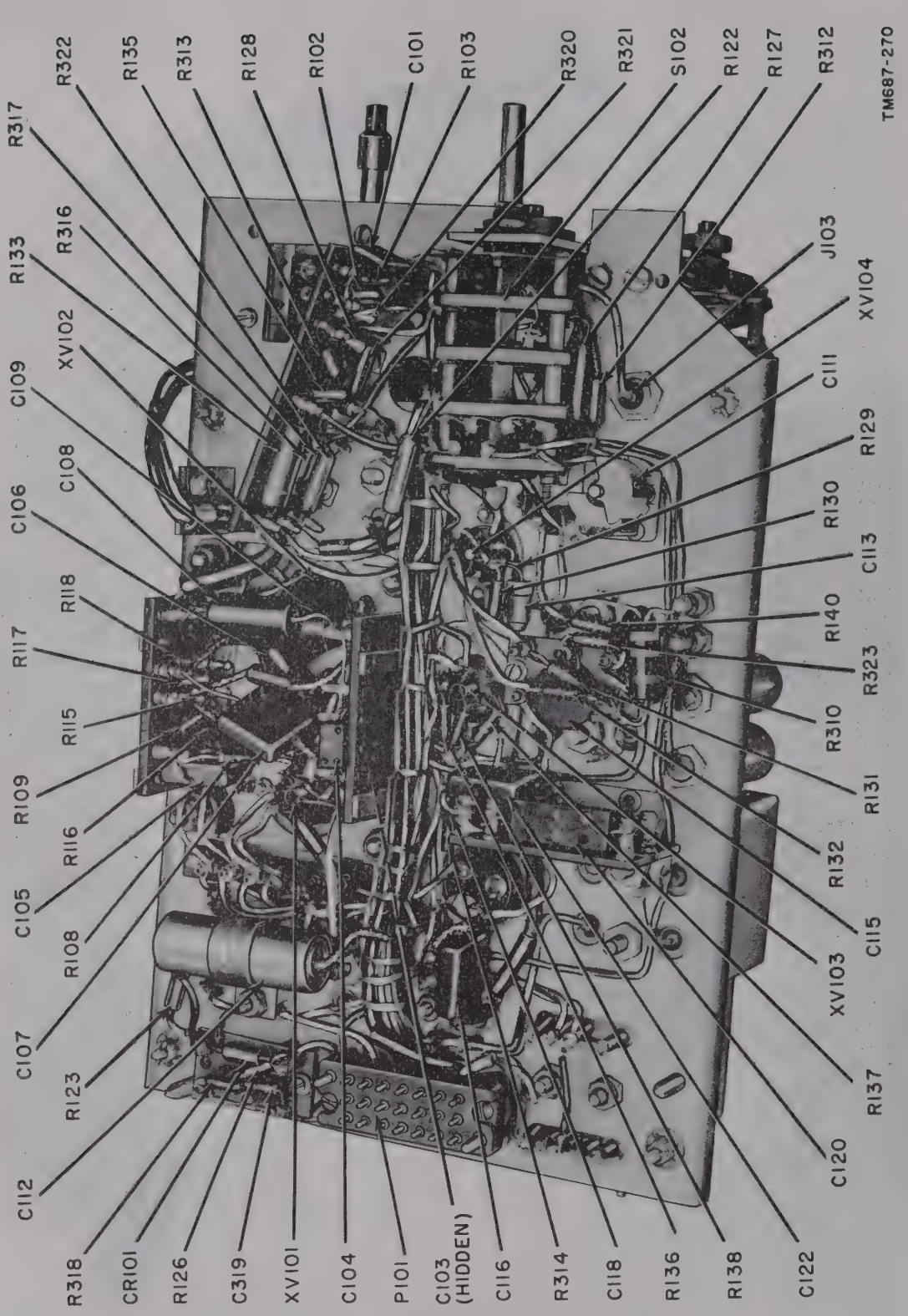

Figure 221. Transmitter base-band amplifier plug-in assembly, bottom side view.

321. Test Equipment Required for Checking Circuit Elements

The test equipment and parts required for checking the circuit elements of the AN/TRC–24 are listed in the chart below. Refer to the manual describing the test equipment to obtain the best operating results.

Quantity	Item	Manual
1	Signal Generator SG–71/FCC	TM 11–5088.
1	Voltmeter ME–30A/U*	
1	Multimeter TS–352/U	TM 11–5527.
1	Electronic Multimeter TS–505/U.	TM 11–5511.
1	Signal Generator TS–497/URR.	TM 11–5030.
1	Autotransformer Fixed Power Transformer TF–167/TRC.	
1	Capacitor, .6 μf ±5% (220V).	
1	Resistor, 600 ohms ±1%.	
1	Resistor, variable, 20K, 4 watts.	
1	Resistor, 225K ±5%.	
1	Resistor, 12.5K ±5%.	
1	Resistor, 50K ±5%.	
1	Capacitor, 46 μμf.	
1	Capacitor, .6 μf.	

*Electronic Multimeter ME–6/U may be used if Voltmeter ME–30A/U is not available. TM 11–5549 covers the ME–6/U.

322. Checking Filters

a. 68-kc Band-Pass Filters. Follow the procedure outlined in (1) through (6) below to test filter FL101 of the receiver or filter FL102 of the transmitter.

(1) Unsolder the leads connecting to terminals 1 and 3 of the filter.

(2) Connect Signal Generator SG–71/FCC to terminals 1 and 2 of the filter, and connect Electronic Multimeter TS–505/U to these terminals.

(3) Use the 600-ohm output impedance of the audio oscillator.

(4) Connect a 225K resistor to terminals 3 and 4 of the filter.

(5) Connect a 46-micromicrofarad (μμf) capacitor to terminals 3 and 4 of the filter.

(6) Connect Voltmeter ME–30A/U to terminals 3 and 4 of the filter.

(7) Adjust the signal generator frequency to each of the values listed in the chart below. Adjust the audio oscillator output to 1.0 volt as read on the TS–505/Y Read the voltage scale of the ME–30A/U and compare this reading with the normal indication listed in the chart below.

Signal generator frequency (kc)	Normal indication* (volts ac)
68	1.4 or higher.
55	.025 or lower.
66	1.0 or lower.
70	1.1 or lower.
55	.25 or lower.

*If indication at 68 kc exceeds 1.4 volts, the maximum permissible readings at the other frequencies may be increased proportionally.

b. 1-kc Selective Filters. Follow the procedure outlined in (1) through (6) below to test filter FL103 of the transmitter or filter FL102 of the receiver.

(1) Unsolder the leads conecting to terminals 1 and 3 of the filter.

(2) Connect a 12.5K resistor to terminals 1 and 2 of the filter.

(3) Connect a 50K resistor to terminals 3 and 4 of the filter.

(4) Connect Signal Generator SG–71/FCC to terminals 1 and 2 of the filter. Connect Electronic Multimeter TS–505/U across these terminals. Use the 600-ohm output impedance of the signal generator.

(5) Connect Voltmeter ME–30A/U to terminals 3 and 4 of the filter.

(6) Adjust the signal generator frequency to each of the values listed in the chart below. Adjust the signal generator output to 1.0 volt as read on the TS–505/U. Read the voltage scale of the ME–30A/U and compare this reading with the normal indication listed in the chart below.

Signal generator frequency (kc)	Normal indication* (volts ac)
0.25	.03 or lower.
0.95	1.0–1.2.
1.00	1.0–1.2.
0.10	1.0–1.2.
4.00	.03 or lower.

c. Filter FL101 of Transmitter. Follow the procedure outlined in (1) through (6) below to test low-pass filter FL101 of the transmitter.

(1) Unsolder the connections to terminals 1 and 3 of the filter.

(2) Connect a 600-ohm resistor to terminals 3 and 4 of the filter.
(3) Connect Signal Generator SG–71/FCC to terminals 1 and 2 of the filter. Connect Electronic Multimeter TS–505/U across these terminals.
(4) Use the 600-ohm output impedance of the signal generator.
(5) Connect Voltmeter ME–30A/U to terminals 3 and 4 of the filter.
(6) Adjust the signal generator frequency to each of the values lised in the chart below. Adjust the signal generator output to 1.0 volt as read on the TS–505/U. Read the voltage scale of the ME–30A/U and compare this reading with the normal indication listed in chart below.

Signal generator frequency (kc)	Normal indication* (volts ac)
50	.95 or higher.
68	.90.
80	.34–0.6.
90	.01 or lower.
150	.01 or lower.

d. Filter FL104 of Transmitter. Follow the procedure outlined in (1) through (6) below to test the .95- to 1.05-kc band-pass filter FL104 of the transmitter.

(1) Unsolder the leads connecting to terminals 1 and 3 of the filter.
(2) Connect a 600-ohm resistor to terminals 3 and 4 of the filter.
(3) Connect Signal Generator SG–71/FCC to terminals 1 and 2 of the filter. Connect Electronic Multimeter TS–505/U across these terminals.
(4) Use the 600-ohm output impedance of the signal generator.
(5) Connect Voltmeter ME–30A/U to terminals 3 and 4 of the filter.
(6) Adjust the signal generator frequency to each of the values listed in the chart below. Adjust the signal generator output to 1.0 volt as read on the TS–505/U. Read the voltage scale of the ME–30A/U and compare this reading with the normal indication listed in the chart below.

Signal generator frequency (kc)	Normal indication* (volts ac)
1.00	.65 or higher.
1.05	.51–.65.
2.00	.074 or lower.

e. Receiver Low-Pass Filters. Follow the procedures outlined in (1) through (6) below to test filters FL103 and FL104 of the receiver.

(1) Unsolder the leads connecting to terminals 1 and 3 of the filter.
(2) Connect a 600-ohm resistor to terminals 3 and 4 of the filter.
(3) Connect Signal Generator SG–71/FCC to terminals 1 and 2 of the filter. Connect Electronic Multimeter TS–505/U across these terminals.
(4) Use the 600-ohm output impedance of the signal generator.
(5) Connect Voltmeter ME–30A/U to terminals 3 and 4 of the filter.
(6) Adjust the signal generator frequency to each of the values listed in the chart below. Adjust the signal generator output to 1.0 volt as read on the TS–505/U. Read the voltage scale of the ME–30A/U and compare this reading with the normal indication listed in the chart below.

Signal generator frequency (kc)	Normal indication* (volts ac)
1.00	.93 or higher.
2.00	.90 or higher.
4.00	.063 or lower.

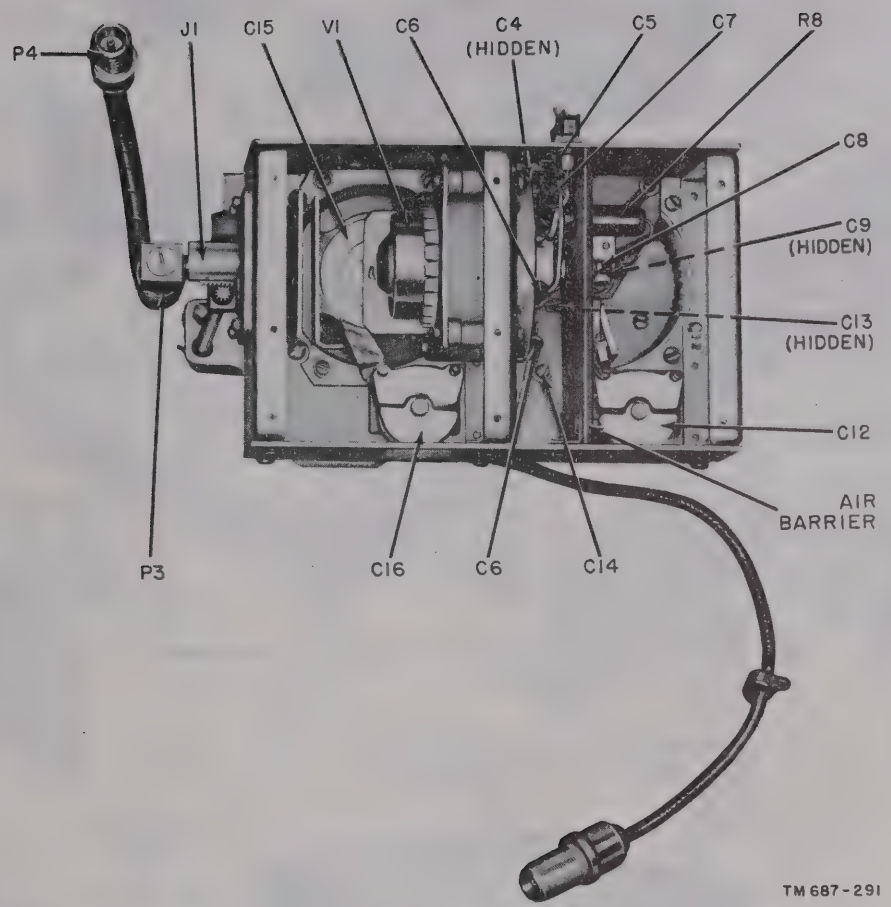

Figure 222. Transmitter B-band tuner, rear view.

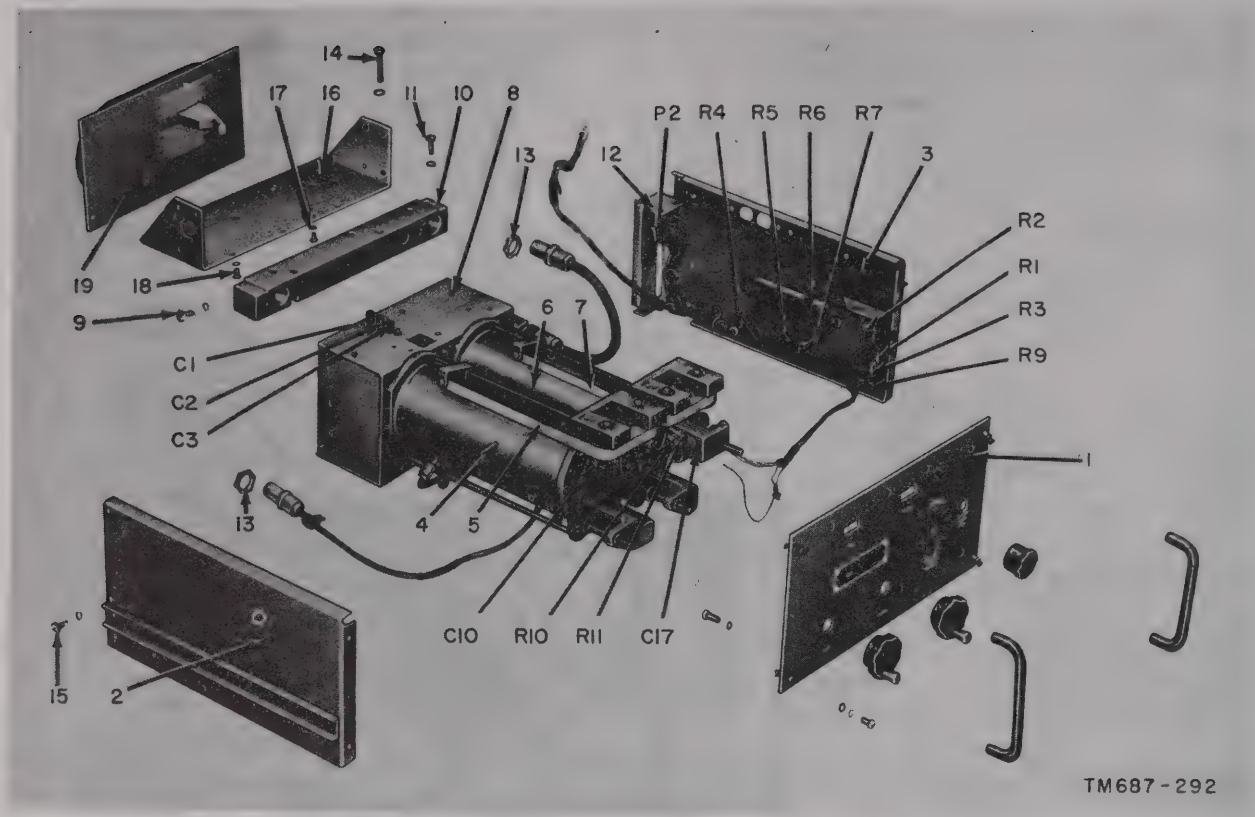

1	Front panel	8	Tube inclosure	14	Screw and lockwasher
2	Left side panel	9	Screw and lockwasher	15	Screw and lockwasher
3	Right side panel	10	Air-duct casting	16	Scuff plate
4	Grid cavity	11	Screw and lockwasher	17	Screw and lockwasher
5	Grid tape	12	Bracket	18	Screw and lockwasher
6	Plate cavity	13	Nut	19	Rear panel
7	Plate tape				

Figure 223. Transmitter B-band tuner, disassembled view.

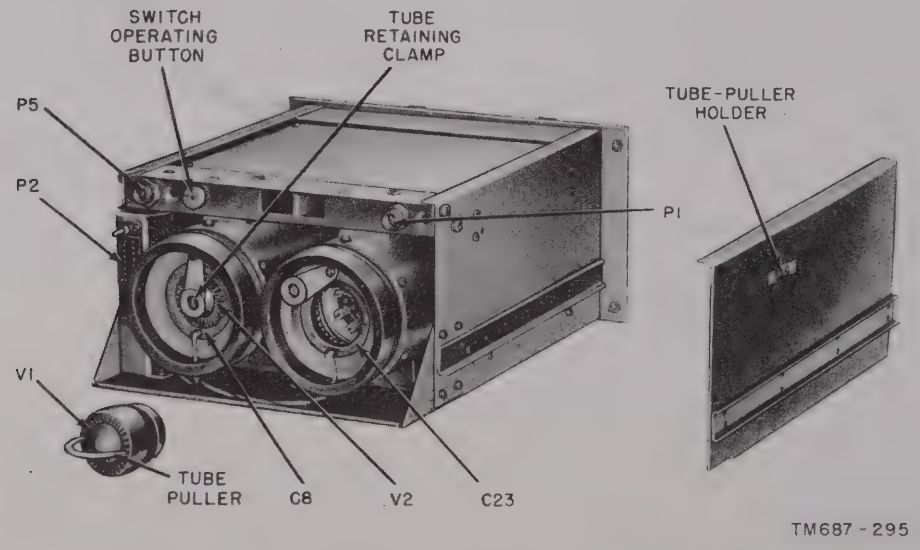

Figure 224. Transmitter C-band tuner, rear-oblique view.

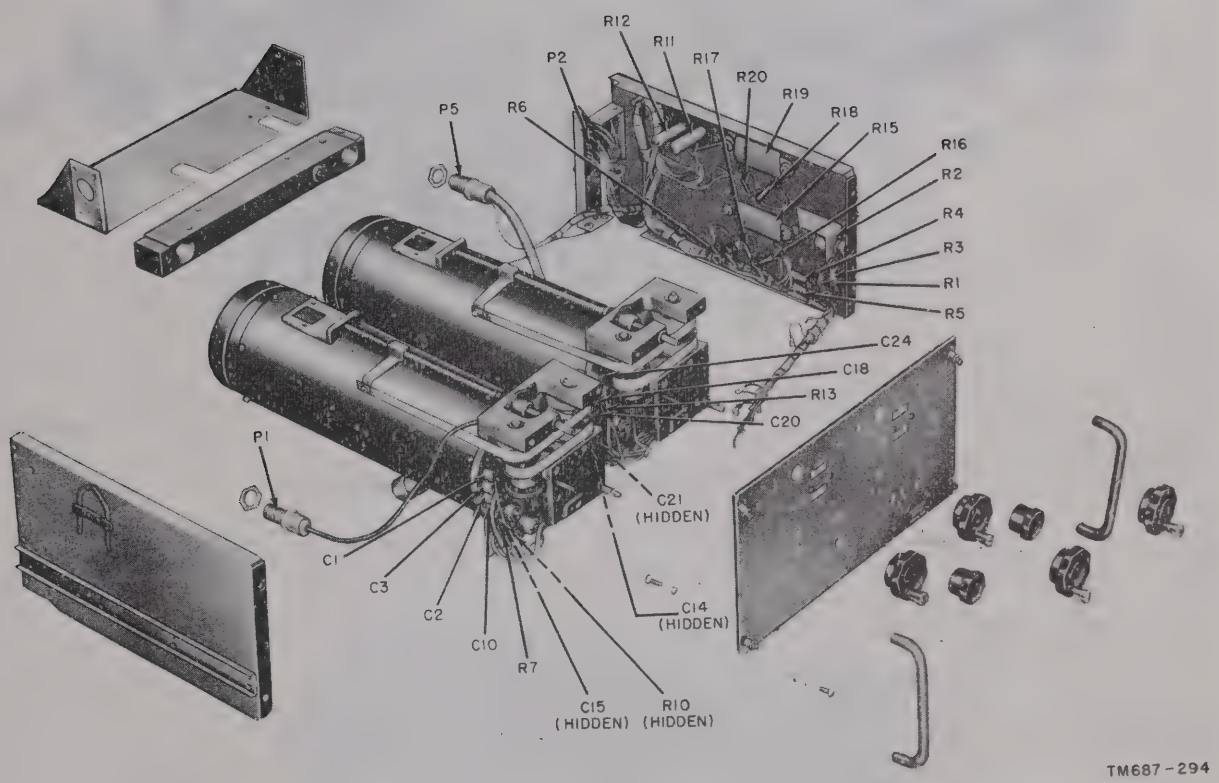

Figure 225. Transmitter C-band tuner, disassembled view.

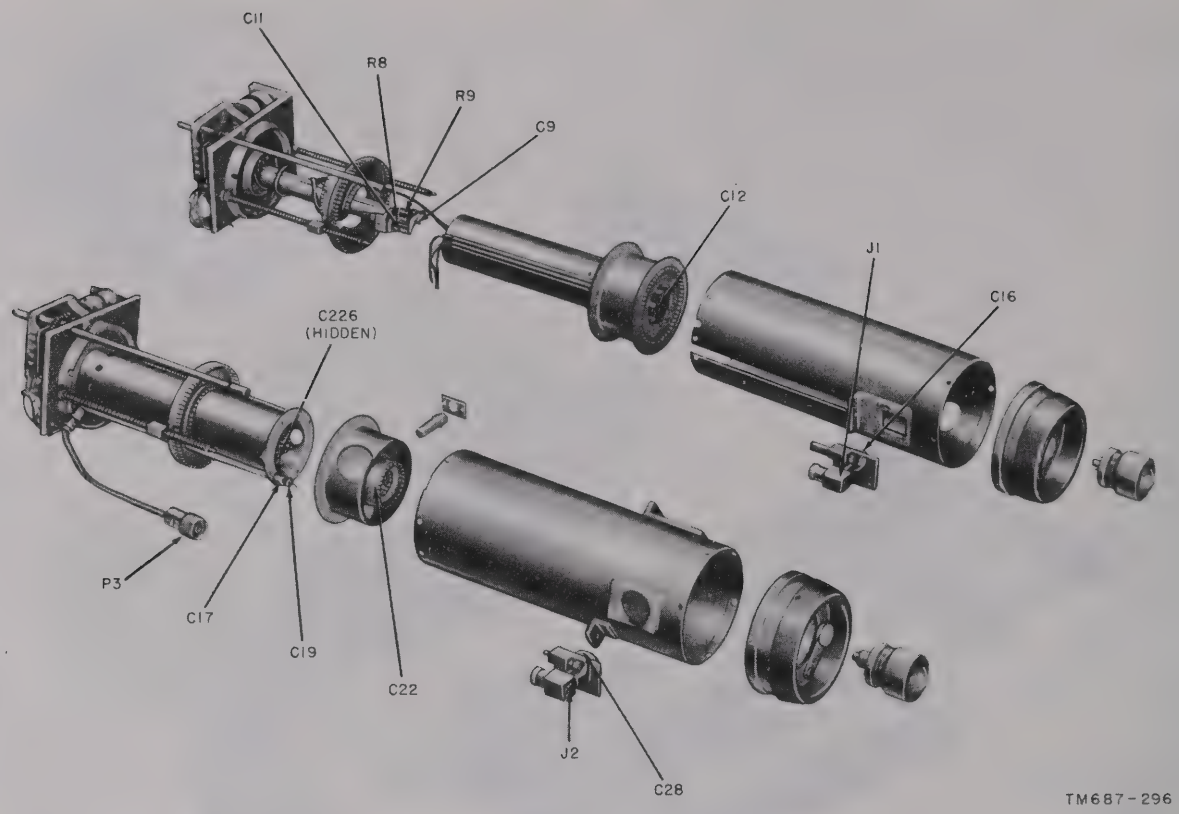

Figure 226. Transmitter C-band tuner, exploded view.

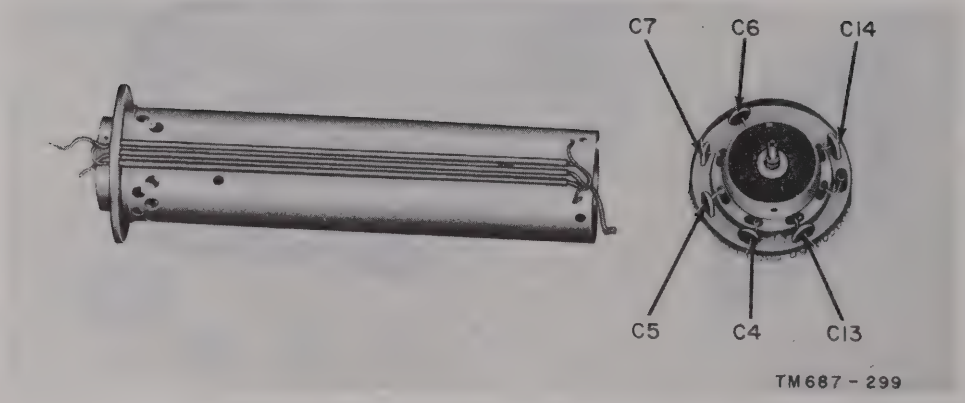

Figure 227. Transmitter C-band tuner, multiplier.

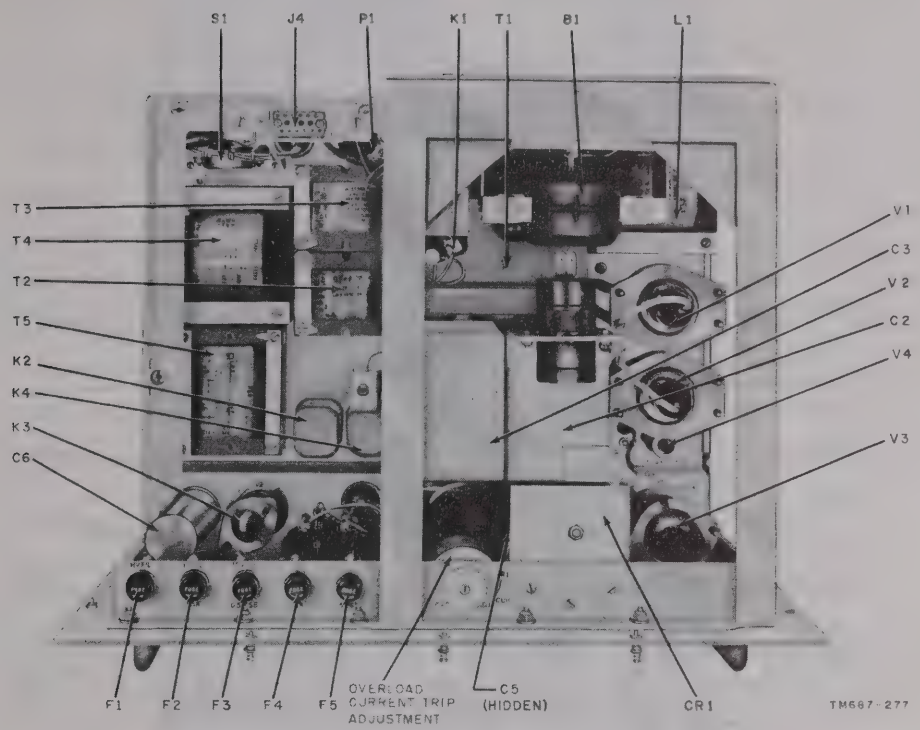

Figure 228. Power Supply PP–685/TRC, low-voltage rectifier assembly removed, top view.

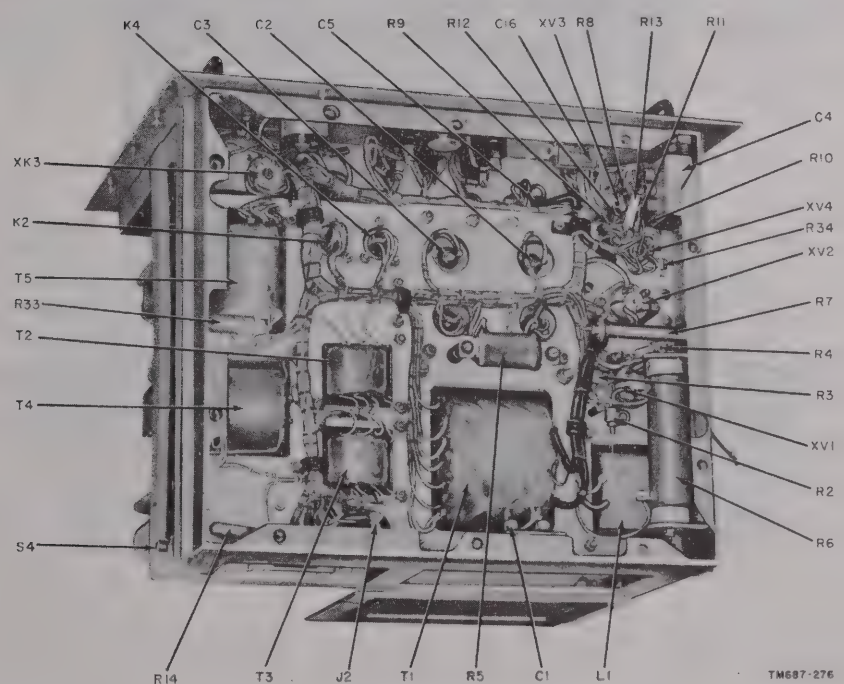

Figure 229. Power Supply PP–685/TRC, shield removed, bottom view.

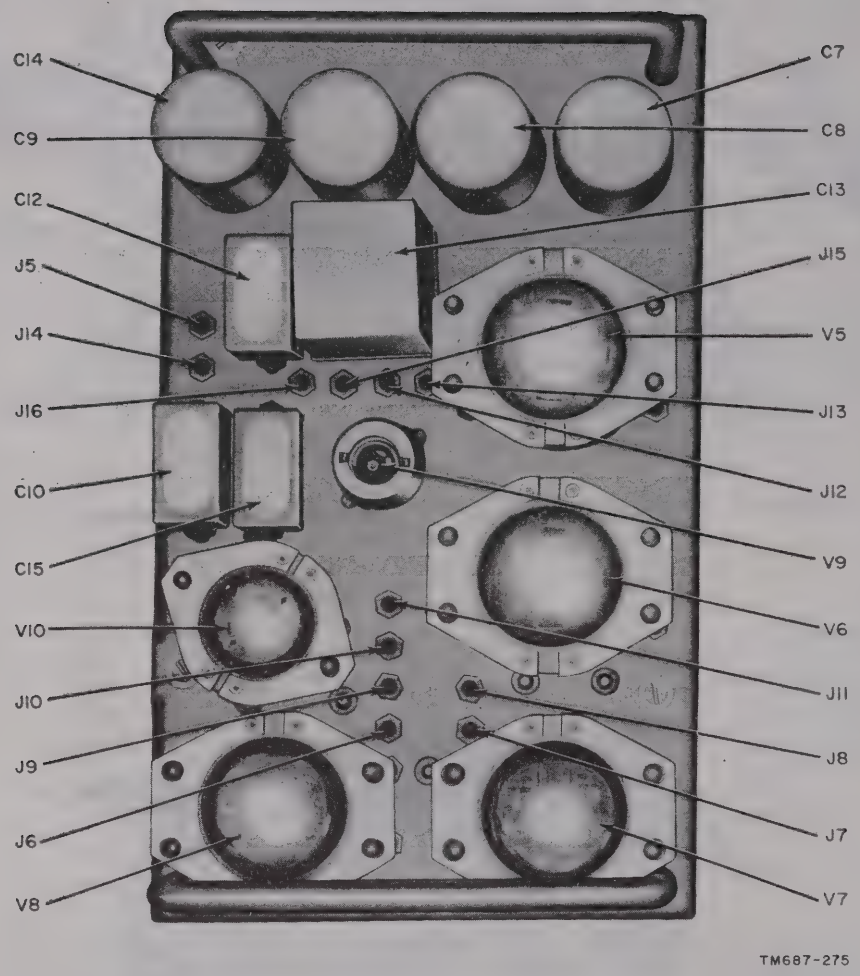

Figure 230. Power Supply PP-685/TRC, low-voltage rectifier assembly, top view.

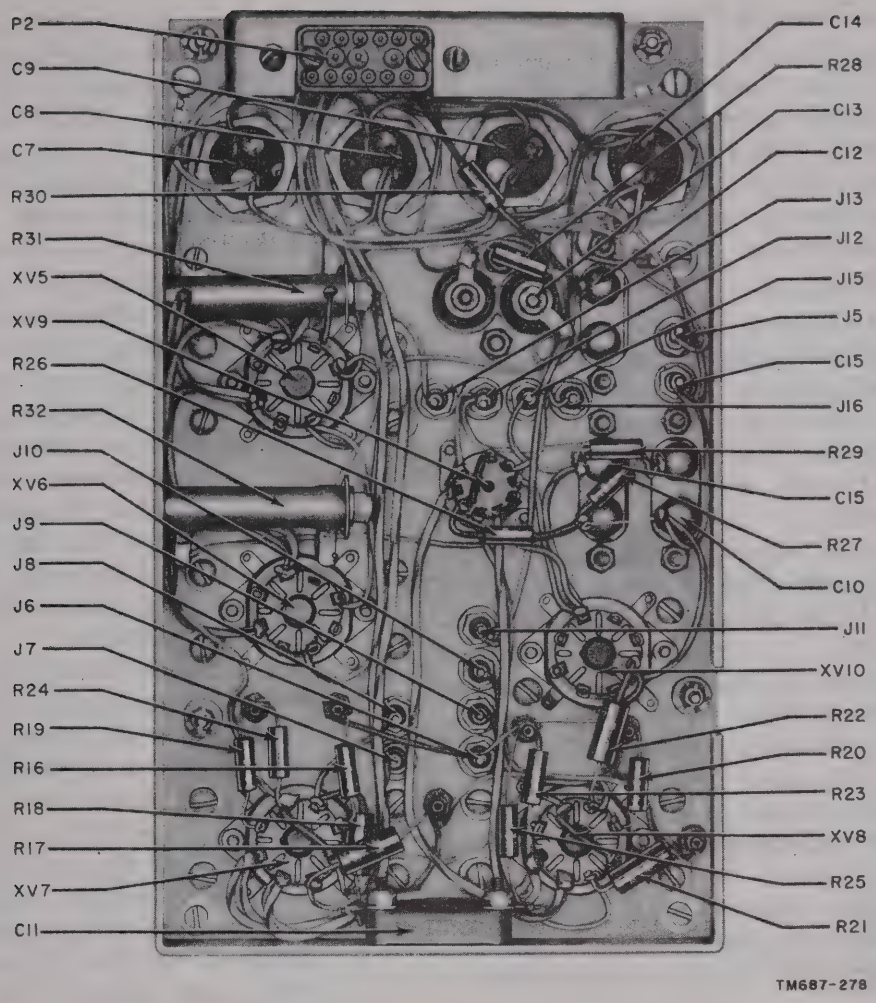

Figure 231. Power Supply PP-685/TRC, low-voltage rectifier assembly, bottom view.

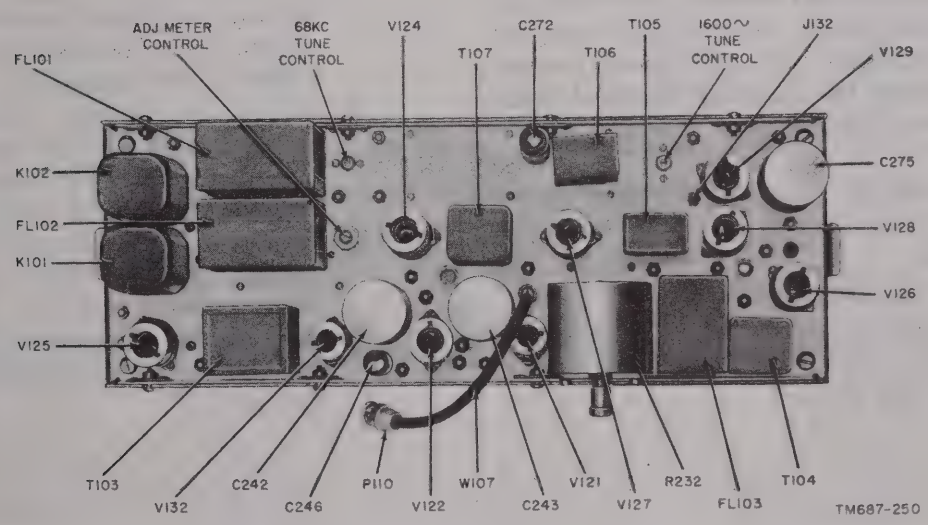

Figure 232. Receiver base-band amplifier plug-in assembly, top view.

323. Checking Coupling Networks

If an interstage coupling unit is suspected of being faulty check it and its associated circuit without removing it from the assembly in which it is mounted. Follow the procedure outlined in *a* through *e* below to determine if a coupling unit is performing normally under its usual operating conditions.

a. General Procedure.

(1) Remove the assembly containing the coupling unit from the transmitter or the receiver (par. 155).

(2) Connect the 21-pin connectors of the assembly and major component with one of the extension cables CX–2406/U.

(3) Locate the reference number of the coupling unit to be tested in the first column of the coupling unit test chart (*e* below).

(4) Connect the hot lead of Signal Generator TS–497/URR to the signal generator connection point listed in the second column of the test chart. A 6-decibel (db) pad is specified in some tests for matching the signal generator to its load.

(5) Connect the ground lead of the signal generator to a chassis ground point as close to the coupling unit as possible.

(6) Connect an output meter (Electronic Multimeter TS–505/U unless otherwise specified) between the meter connection point, listed in the third column of the chart, and chassis ground.

(7) Perform the operation outlined in the special instructions column for the test.

(8) Adjust the output of the signal generator to .10 volt for each frequency used.

b. Test 1, Checking Stage Gain.

(1) Adjust the signal generator frequency to the value listed in the test 1 row of the test chart.

(2) Check to see that the meter reading corresponds to the normal value listed in the test chart.

c. Test 2, Checking Band Pass. To determine if the coupling unit will pass the normal band of frequencies, follow the procedure outlined in (1) through (4) below.

(1) Adjust the signal generator frequency to a value higher than the center frequency (*b*(1) above) so that the meter reads the value listed in the test 2 row. Note the frequency of the signal generator after it has been adjusted.

(2) Adjust the signal generator frequency to a value lower than the center frequency so that the meter reads the value listed in the test 2 row (same value as in (1) above). Note the frequency of the signal generator after it has been adjusted.

(3) The difference between the signal generator frequencies noted in (1) and (2) above is the bandwidth. Check to see that the determined bandwidth is within the limits listed in the *Bandwidth* column of the test 2 row.

(4) For some of the coupling units, it is ncessary to perform an additional test to determine if the bandwidth is adequate. If test 2A is listed for a coupling unit, perform the test by following the same procedure as test 2 ((1)–(3) above).

d. Test 3, Checking Tuning Range.

(1) Adjust the signal generator frequency to the value specified in the first row of test 3 of the chart.

(2) Adjust the tuning slugs of the coupling unit so that the meter reads at least the value listed in the *meter read* column of the first row of test 3.

(3) Repeat the procedures of (1) and (2) above; substitute the values of the second row of test 3.

(4) Restore the tuning slugs to the test 1 position after the test has been performed.

e. Coupling Unit Test Chart.

Coupling unit	Sig gen connection	Meter connection	Special instructions	Test No.	Signal generator freq (mc)	Meter read (volts)	Bandwidth
Z102 of xmtr.	Term. 2 of Z102.	Term. 5 of Z102.	Short term. 6 and 7 of Z102. Use 6-db pad between signal generator and terminal 2 of Z102. Adjust tuning slug of L126 for maximum indication for tests 1 and 3.	1	10.125	.40 ±.13.	
				2	*c* above.	.35.	600 ±100 kc.
					c above.	.28.	1,100 ±200 kc.
				3	10.625.	.40 ±.13.	
					9.625.	.40 ±.13.	
Z103 of xmtr.	Pin 1 of V118.	Term. 5 of coupling unit under test.	Short term. 2 and 7 of coupling unit. Check to see that +150 volts is present between term. 3 and 2 of unit. Adjust tuning slug of unit for max indication for tests 1 and 3.	1	10.125.	2.0 ±.6	
Z104 of xmtr.	Pin 1 of V119.			2	*c* above.	1.8.	350 ±50 kc.
					c above.	1.4.	675 ±100 kc.
				3	10.625.	2.0 ±.6.	
					9.625.	2.0 ±.6.	
Z105 of xmtr.	Pin 1 of tube V120.	Term. 1 of Z105.	Check to see that +150 volts is present between term. 3 and 2 of Z105. Adjust tuning slug of L130 for max indication in test 1 and 3.	1	10.125.	2.0 ±0.6.	
				2A	*c* above.	1.8.	450 ±75 kc.
					c above.	1.4.	650 ±100 kc.
		Read on RF CHANNEL TUNE.	Adjust tuning slug of L131 for max indication at 10.125 mc.	2B	*c* above.	.7 of max indication.	175 ±50 kc.
					c above.	.5 of max indication.	275 ±75 kc.
				3	10.625.	2.0 ±0.6.	
					9.625.	2.0 ±0.6.	
Z106 of xmtr.	Pin 1 of tube V121.	Term. 5 of Z106.	Check for +150 volts between term. 3 and 2 of Z106.	1	10.125.	1.2 ±0.4.	
				2	*c* above.	1.05.	600 ±75 kc.
					c above.	.84.	1.2 ±.15 mc.
			Adjusting tuning slug of L132 for max indication.	3	10.625.	1.2 ±.4.	
					9.625.	1.2 ±.4.	

e. Coupling Unit Test Chart (continued).

Coupling unit	Sig gen connection	Meter connection	Special instructions	Test No.	Signal generator freq (mc)	Meter read (volts)	Bandwidth
Z107 of xmtr.	Pin 1 of tube V122.	Term. 10 of P119.	Check for +150 volts between term. 3 and 2 of Z107. Substitute Multimeter TS-352/U in place of vtvm. Normal reading for test 3 is in μa.	2	*c* above.	Peak.	900 ±75 kc.
				3	10.325.	100 μa.	
					9.925.	100 μa.	
Z101 of rcvr.	Term. 6 of Z101.	Term. 5 of Z101.	Adjust tuning slug of L111 for maximum indication in tests 1 and 3. Use 6-db pad between signal generator and coupling.	1	30.0.	.45 ±.15.	
				2	*c* above.	.40.	1.5 ±.15 mc.
				3	31.5.	.45 ± .15.	
					29.5.	0.45 ±.15.	
Z102	Pin 1 of V102.	Term. 5 of coupling unit under test.	Check that +150 volts is applied to term. 3 of coupling unit. Adjust tuning slugs of coupling unit for maximum vtvm indication for tests 1 and 3.	1	30.0.	.9 ±0.3.	
Z103	Pin 1 of V103.			2	*c* above.	.85.	650 ±25 kc.
Z104	Pin 1 of V104.				*c* above.	.79.	1.0 mc ±50 kc.
Z105	Pin 1 of V105.				*c* above.	.50	2.0 ±.1 mc.
or Z106 of rcvr.	Pin 1 of V106.			3	31.5.	.9 ± 0.3.	
					29.5.	0.9 ±0.3.	
Z107 of rcvr.	Pin 1 of V107.	Term. 6 of Z107.	Check to see that +150 volts is applied to term. 3 of coupling unit. Connect a 75-ohm resistor between term. 6 and ground. Adjust tuning slug of coil L122 to maximum vtvm indication for tests 1 and 3.	1	30.0.	.11 ±0.03.	
				2	*c* above.	.099.	1.6 ±.15 mc.
				3	31.5.	.11 ±0.03.	
					29.5.	.11 ±0.03.	

e. Coupling Unit Test Chart (continued).

Coupling unit	Sig gen connection	Meter connection	Special instructions	Test No.	Signal generator freq (mc)	Meter read (volts)	Bandwidth
Z109 of rcvr.	Term. 6 of Z109.	Term. 5 of Z109.	Unsolder the wire connecting to term. 7 of Z109. Adjust tuning slug of L124 for maximum indication in tests 1 and 3. Use the 6-db pad between the signal generator and the coupling unit.	1	30.0.	.3 ±0.15.	
				2	*c* above.	.24.	2.2 ±.5 mc.
				3	31.5.	.3 ±15.	
					28.55.	.3 ±1.5.	
Z110 of rcvr.	Pin 1 of V109.	Term. 5 of Z110.	Check resistance between term. 5 and 7 and 8 and 5. Should be .15 megohms when positive ohmmeter lead is connected to term. 7 and 5. Short term. 2 and 8 of Z110. Adjust tuning slug of L127 for maximum indication in tests 1 and 3.	1	30.0.	1.0 ±.3.	
				2	*c* above.	.89.	1.4 ±.3 mc.
				3	31.5.	1.0 ±0.3.	
					28.5.	1.0 ±0.3.	
Z111 of rcvr.	Pin 1 of V109.	Use FREQ DRIFT meter of rcvr.	Unsolder wire connecting to term. 7 of Z109. Adjust tuning slugs of L131 (bottom) and L132 (top) for maximum indication in test 1. Connect a 5-$\mu\mu$f capacitor between terminal 1 and ground.	1	29.4.	−10 μa.	
					30.6.	+10 μa.	
				2	*c* above.	Peak readings.	2 ±.1 mc between peaks.
Z112 of rcvr.	Not connected.	J118.	Check that +150 volts is present between term. 4 and 5 of Z112.			−90.	

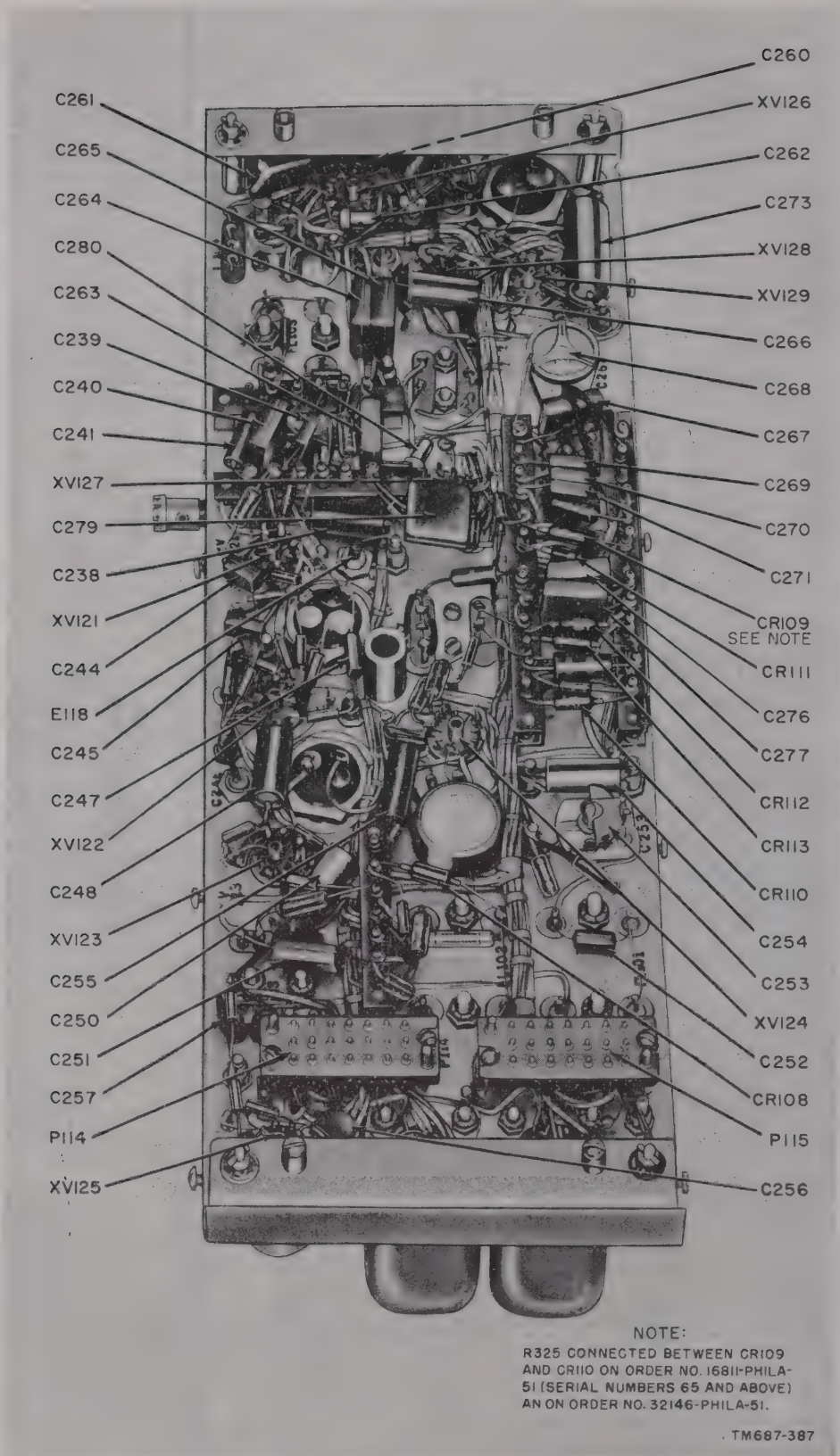

Figure 233. Receiver base-band amplifier plug-in assembly, bottom view showing capacitors.

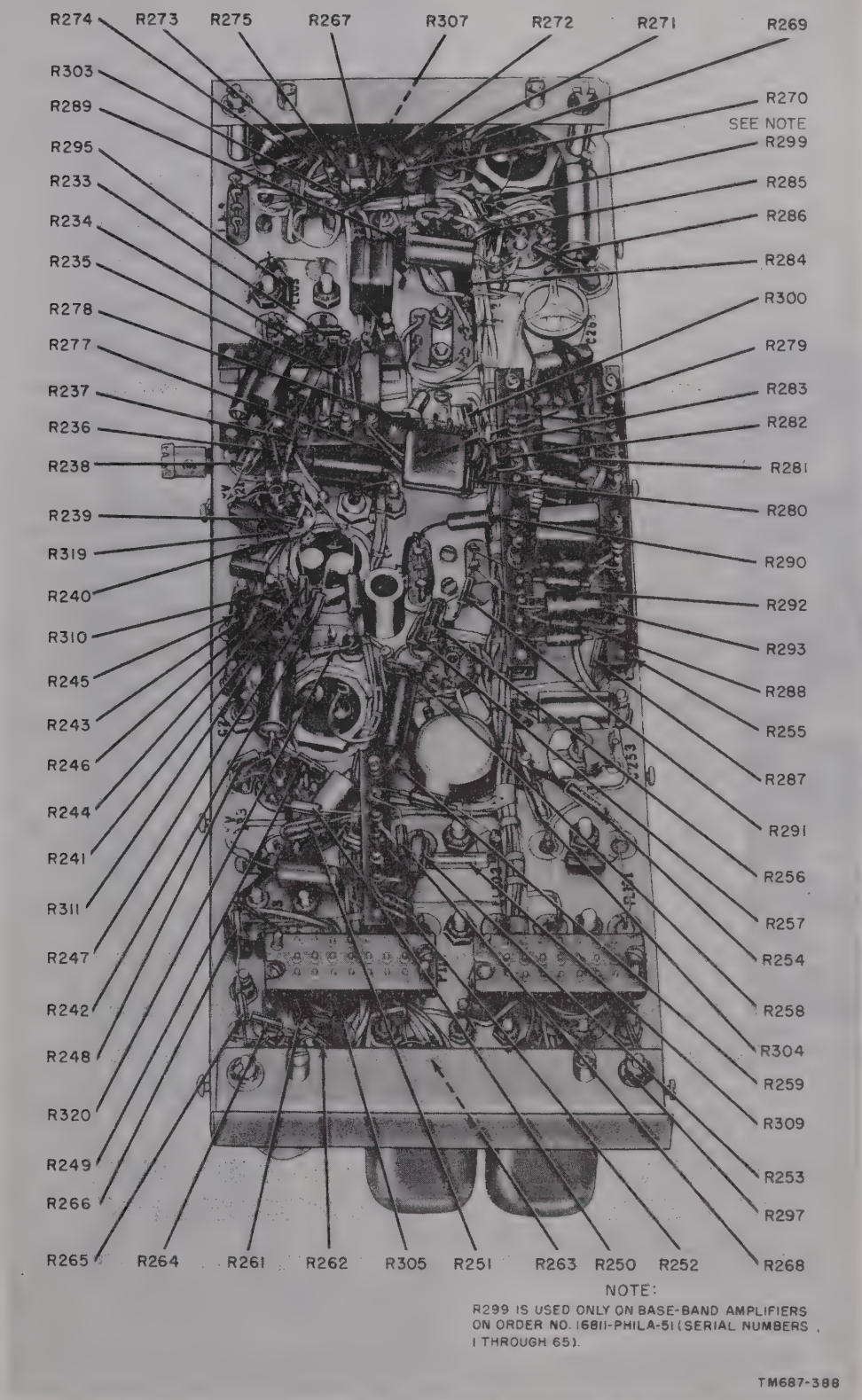

Figure 234. Receiver base-band amplifier plug-in assembly, bottom view showing resistors.

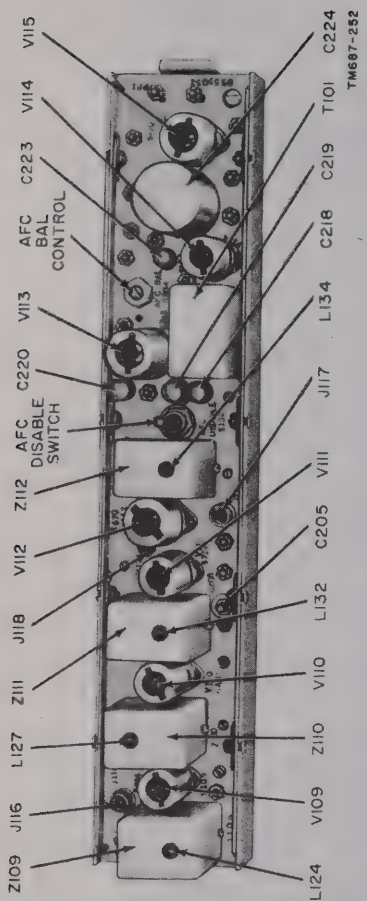

Figure 235. Limiter-discriminator-afc plug-in assembly, top view.

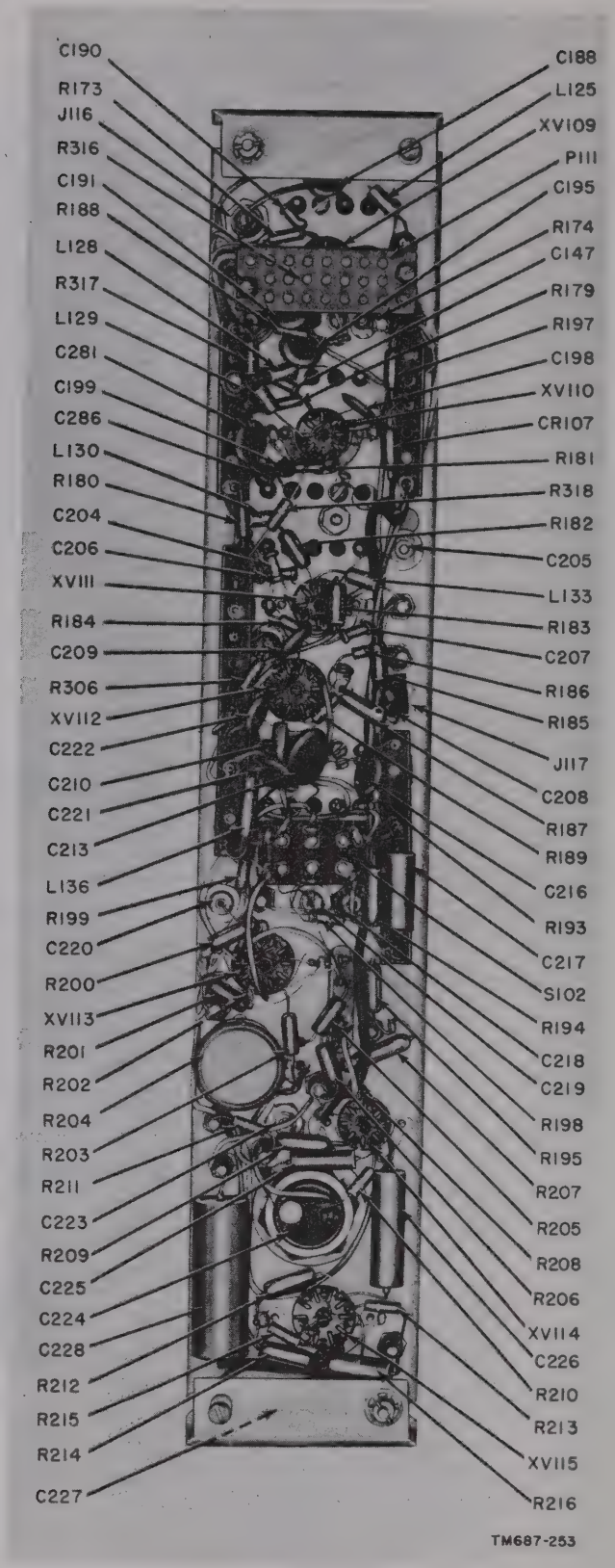

Figure 236. Limiter-discriminator-afc plug-in assembly, bottom view.

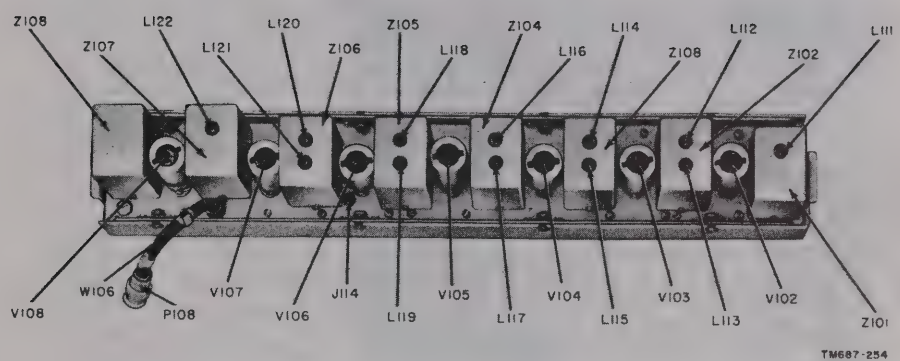

Figure 237. Receiver if. amplifier plug-in assembly, top view.

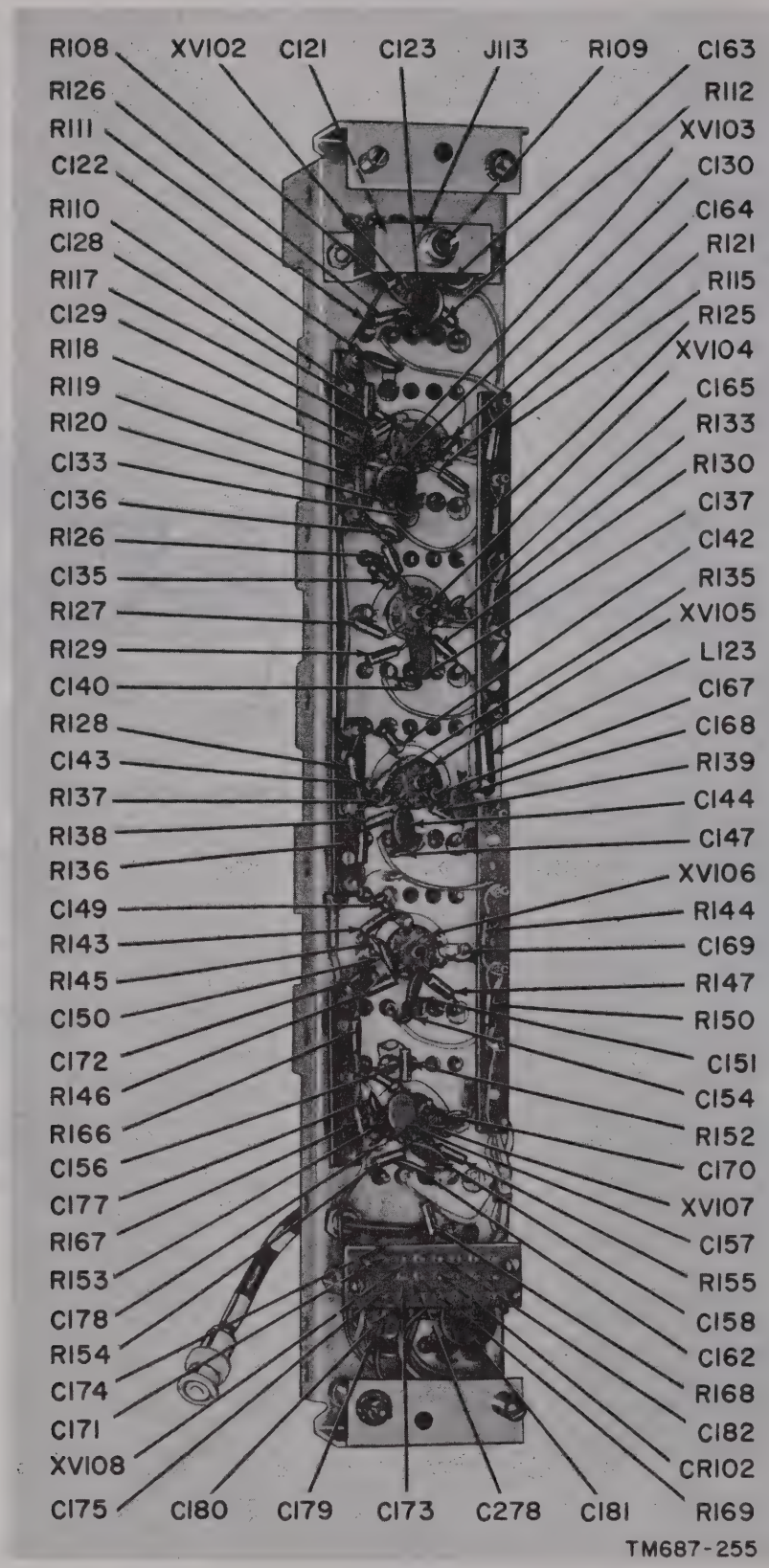

Figure 238. Receiver if. amplifier plug-in assembly, bottom view.

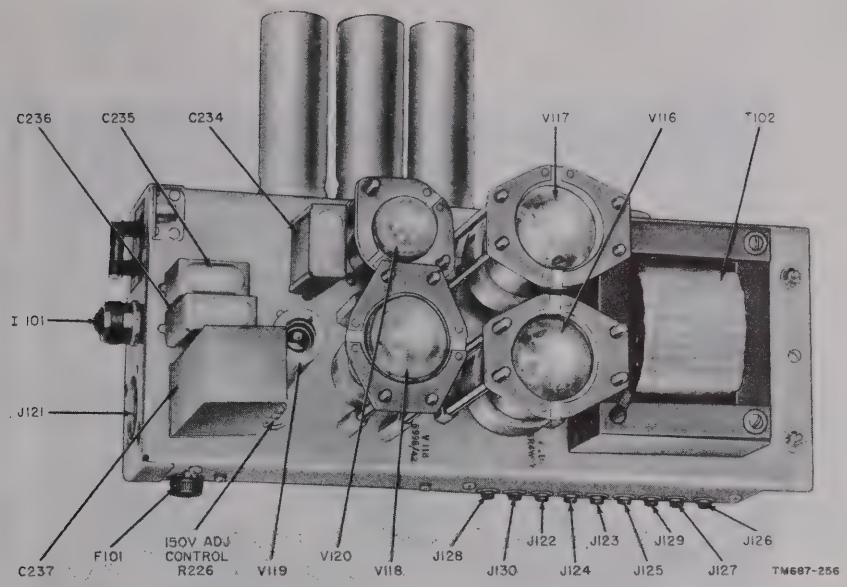

Figure 239. Receiver power supply, top view.

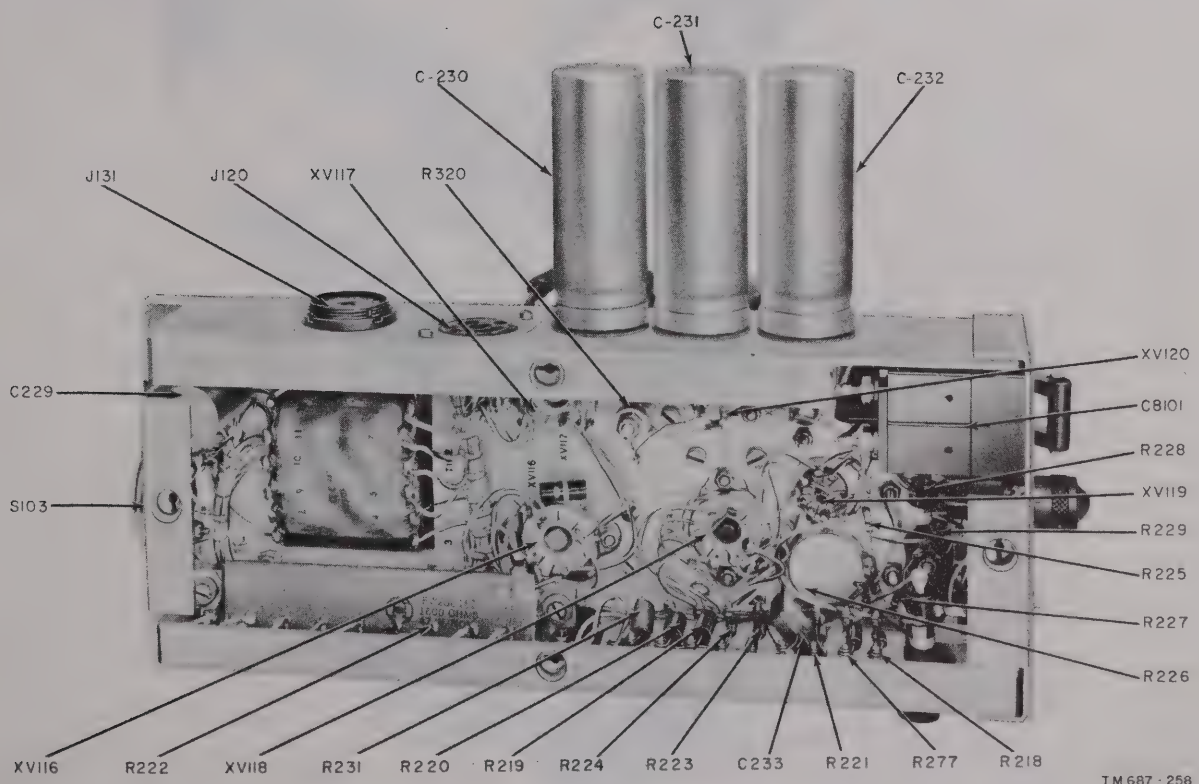

Figure 240. Receiver power supply, bottom view.

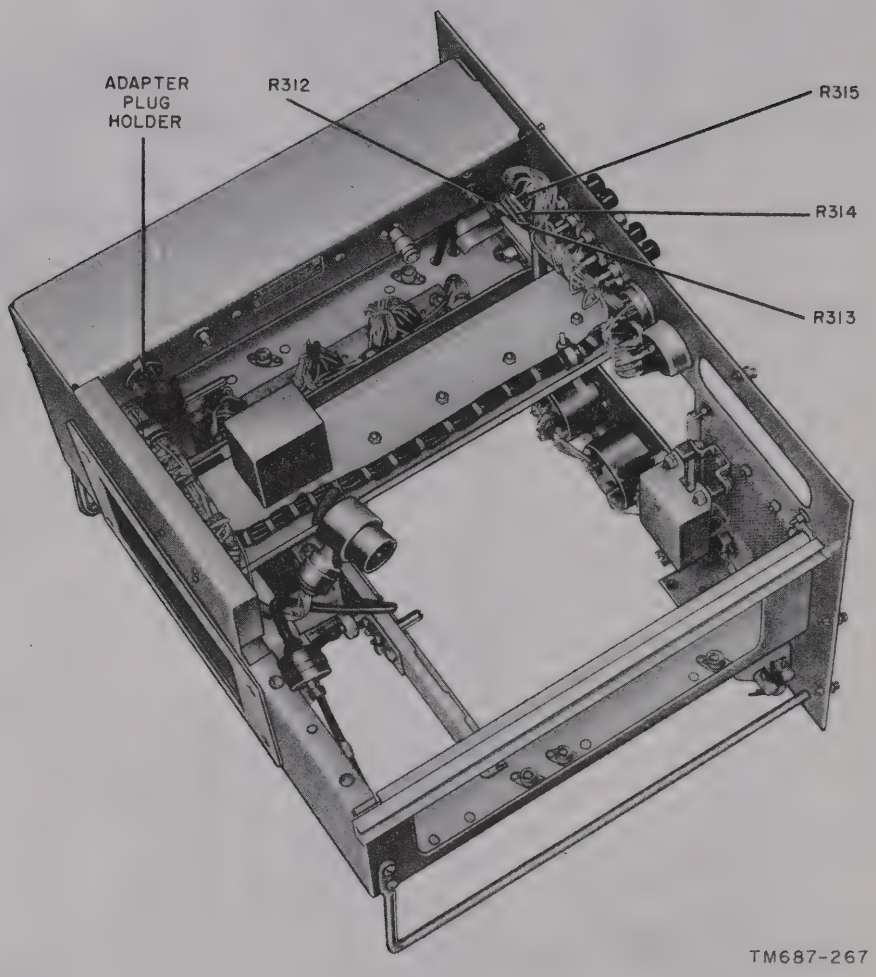

Figure 241. Receiver chassis, bottom view.

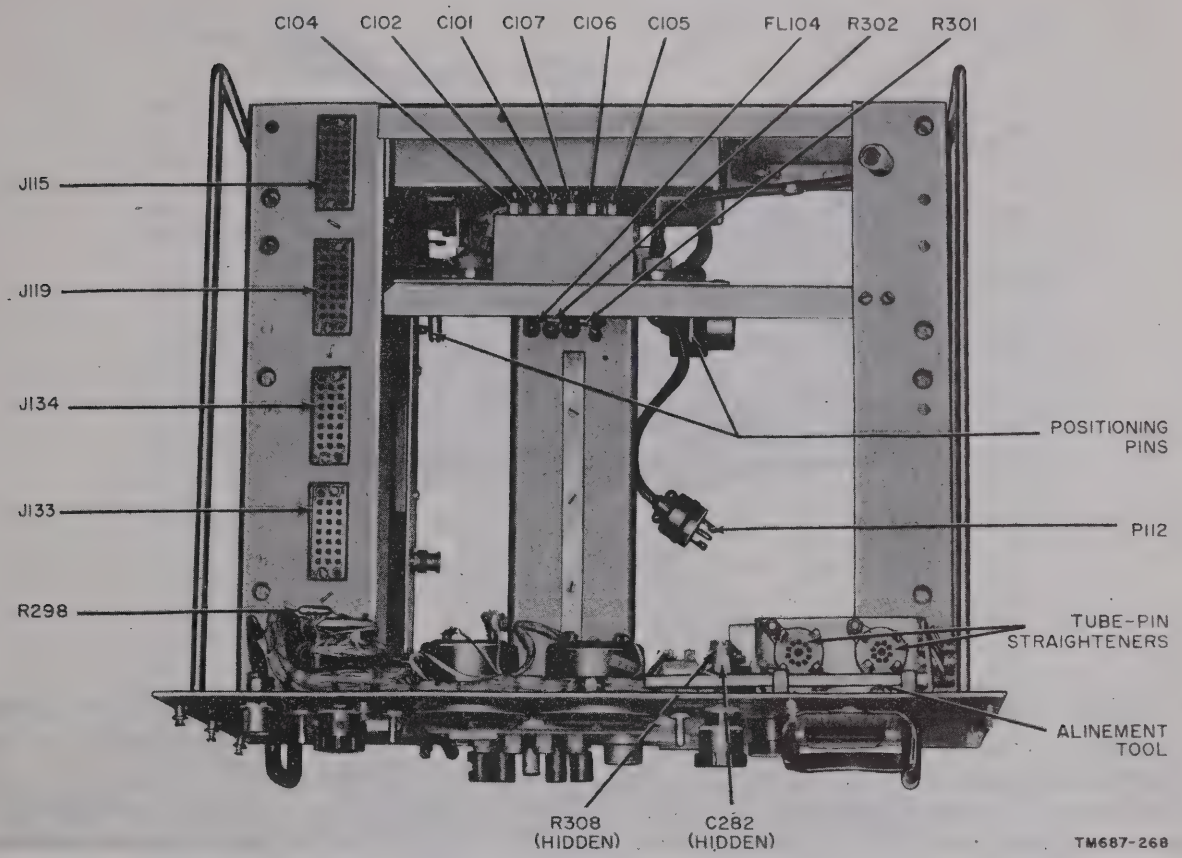

Figure 242. Receiver chassis, top view.

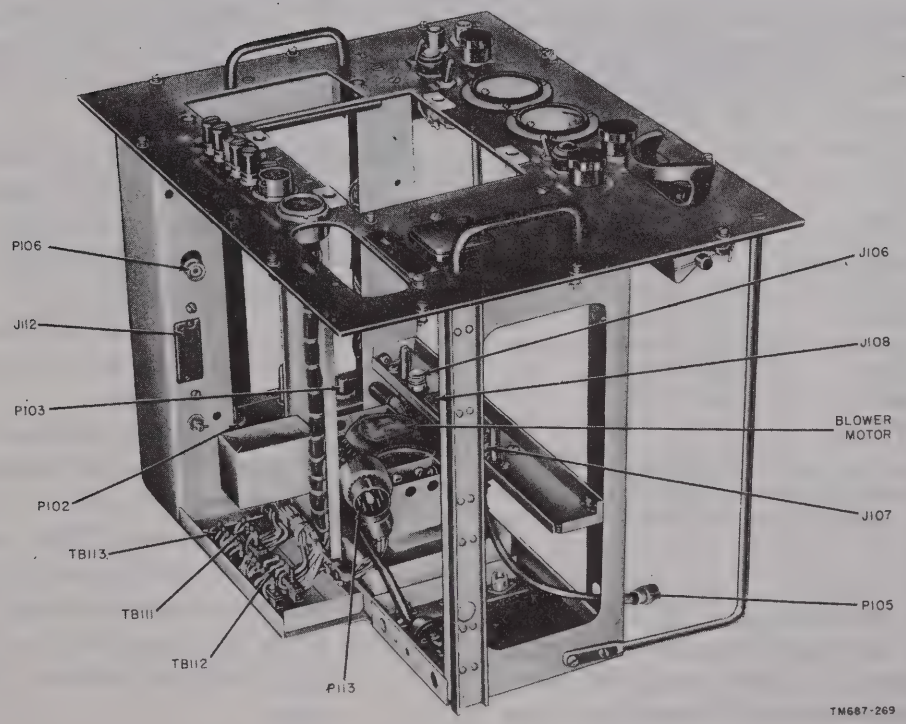

Figure 243. Receiver chassis, bottom right view.

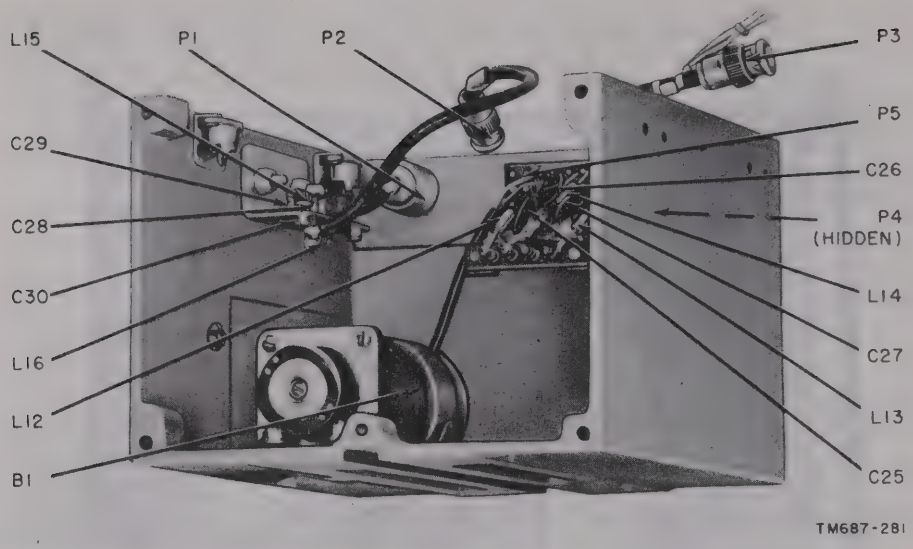

Figure 244. Receiver B-band tuner frame, interior view.

324. Checking Relays

a. Winding Resistance Checks. Radio Set AN/TRC–24 contains seven relays. Two relays are in the radio receiver and one is in the transmitter. The remaining four relays are contained in Power Supply PP–685/TRC. The winding resistance is checked by connecting an ohmmeter across the appropriate terminals after any existing shunt path has been removed. The chart below lists the relay, its location, the terminals of the winding or heating element, and the winding resistance.

Relay	Location	Terminals	Resistance (ohms)	Operating voltage
K101	Radio transmitter	7, 8	8,000	80
K101	Radio receiver	7, 8	8,000	80
K102*	Radio receiver	1, 2	1,000	7.5
K1	Power supply	C1, C2	35	12
K2	Power supply	21, 22	111	12
K3	Power supply	2, 3	3	
K4	Power supply	7, 8	2.2	12

*For radio receivers on order No. 16811–Phila–51 (bearing serial numbers 1 through 64), the resistance between terminals 7 and 8 of relay K102 is 8,000 ohms and the operating voltage is 80 volts.

b. Operational Check. When no current passes through the winding of the relay, continuity between contacts is checked in the same manner as switches. To check continuity when sufficient current is passed through the relay winding to operate the relay, follow the procedures outlined below. This procedure is not applicable to thermal relay K3.

(1) Connect the outside terminals of a 20K, 4-watt potentiometer between +150 volts dc and ground (terminals M and S of TRANSMITTER jack J3 of Power Supply PP–685/TRC).

(2) Connect one terminal of the relay winding to ground (terminal S of Jack J3.)

(3) With a voltmeter, measure the voltage between the center terminal of the potentiometer and ground. Adjust the potentiometer to obtain a minimum voltage reading.

(4) Connect the other terminal of the relay winding to the center terminal of the potentiometer.

(5) Adjust the potentiometer until the voltmeter indicates the operating voltage shown in the chart in *a* above.

(6) The application of the operating voltage to the winding of the relay should cause the relay to operate.

(7) With an ohmmeter, measure continuity between contacts that should close.

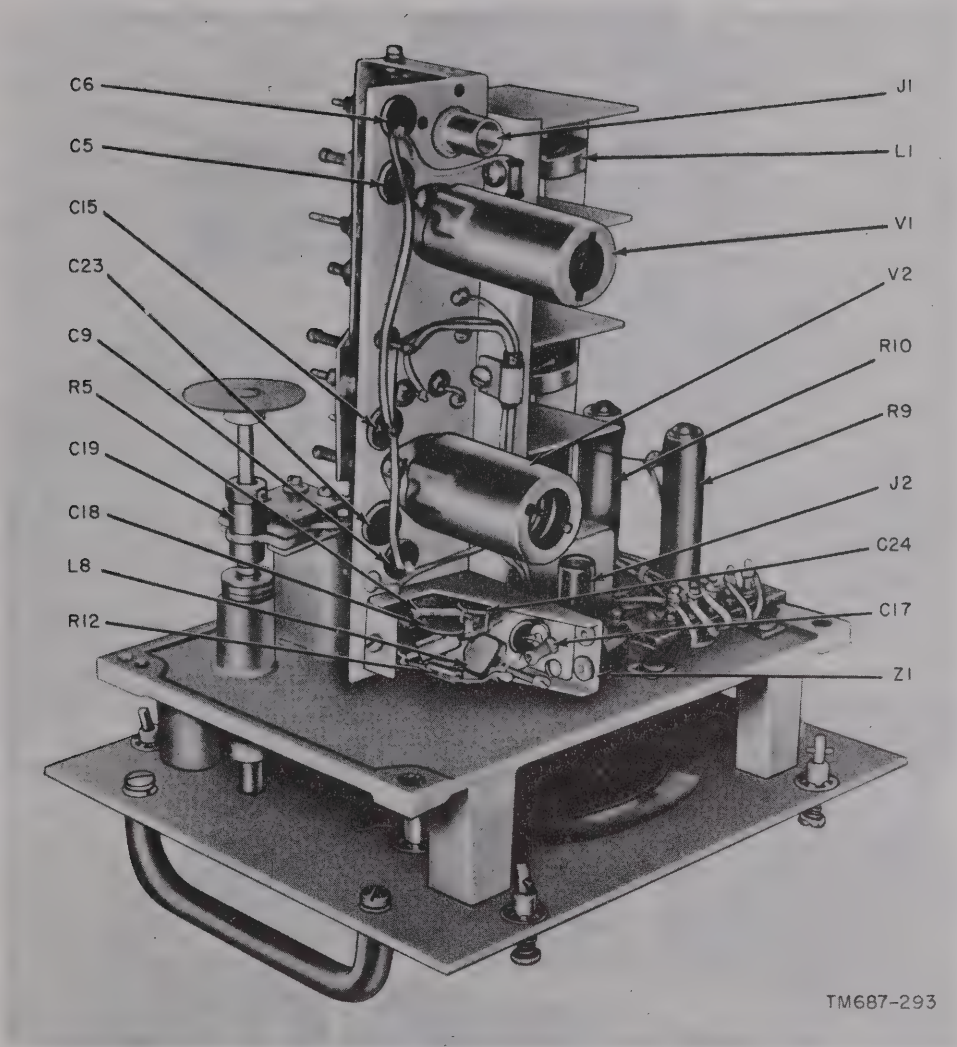

Figure 245. Receiver B-band rf tuner, top view.

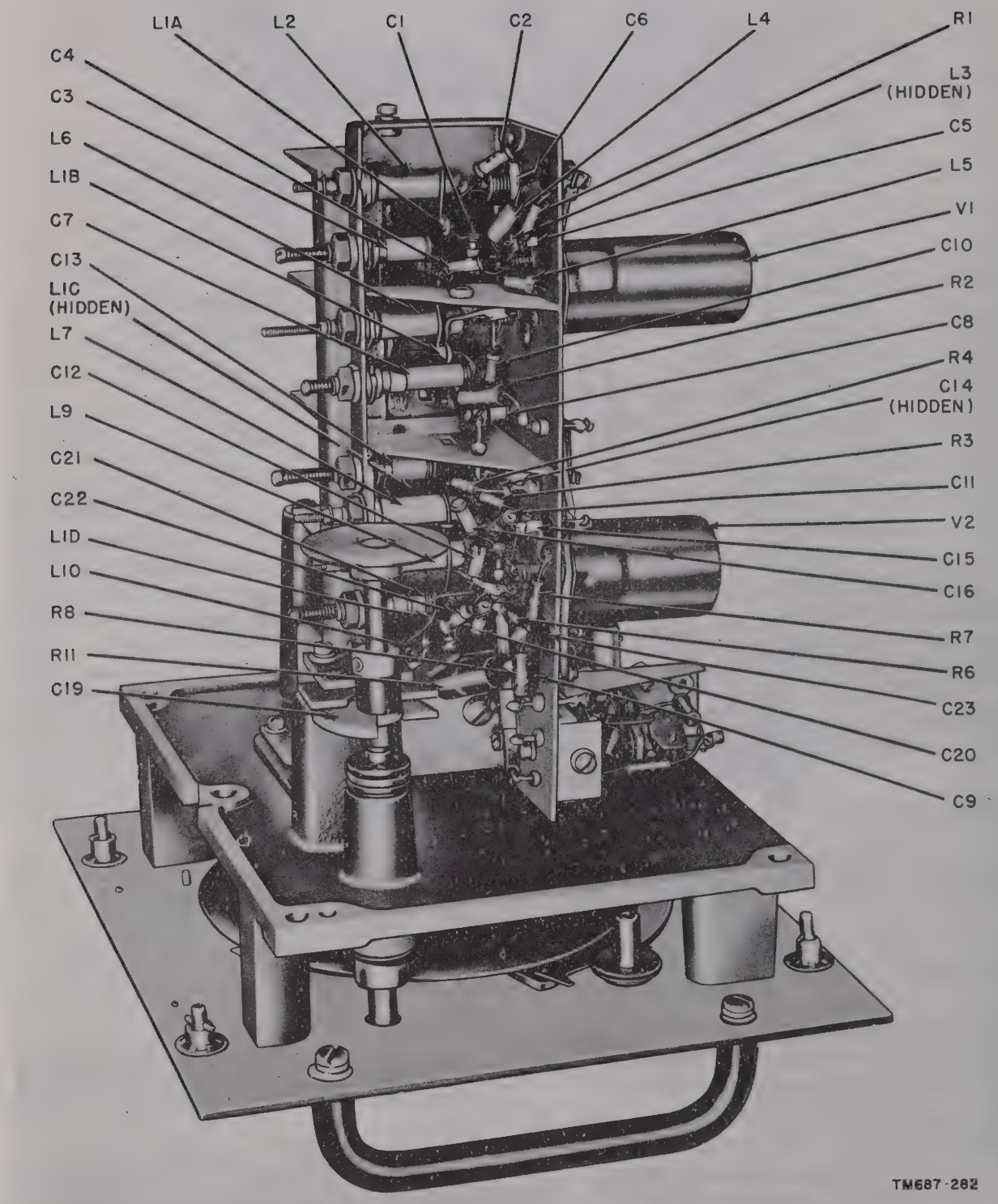

Figure 246. Receiver B-band rf tuner, left-side view.

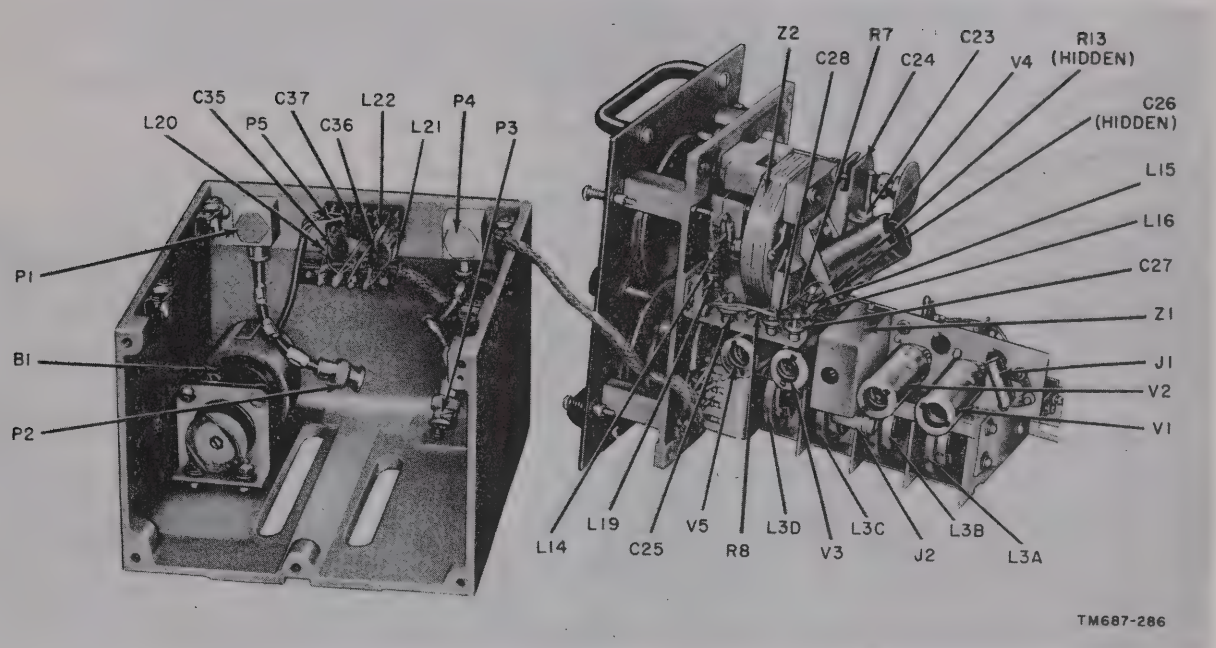

Figure 247. Receiver C-band rf tuner, top view.

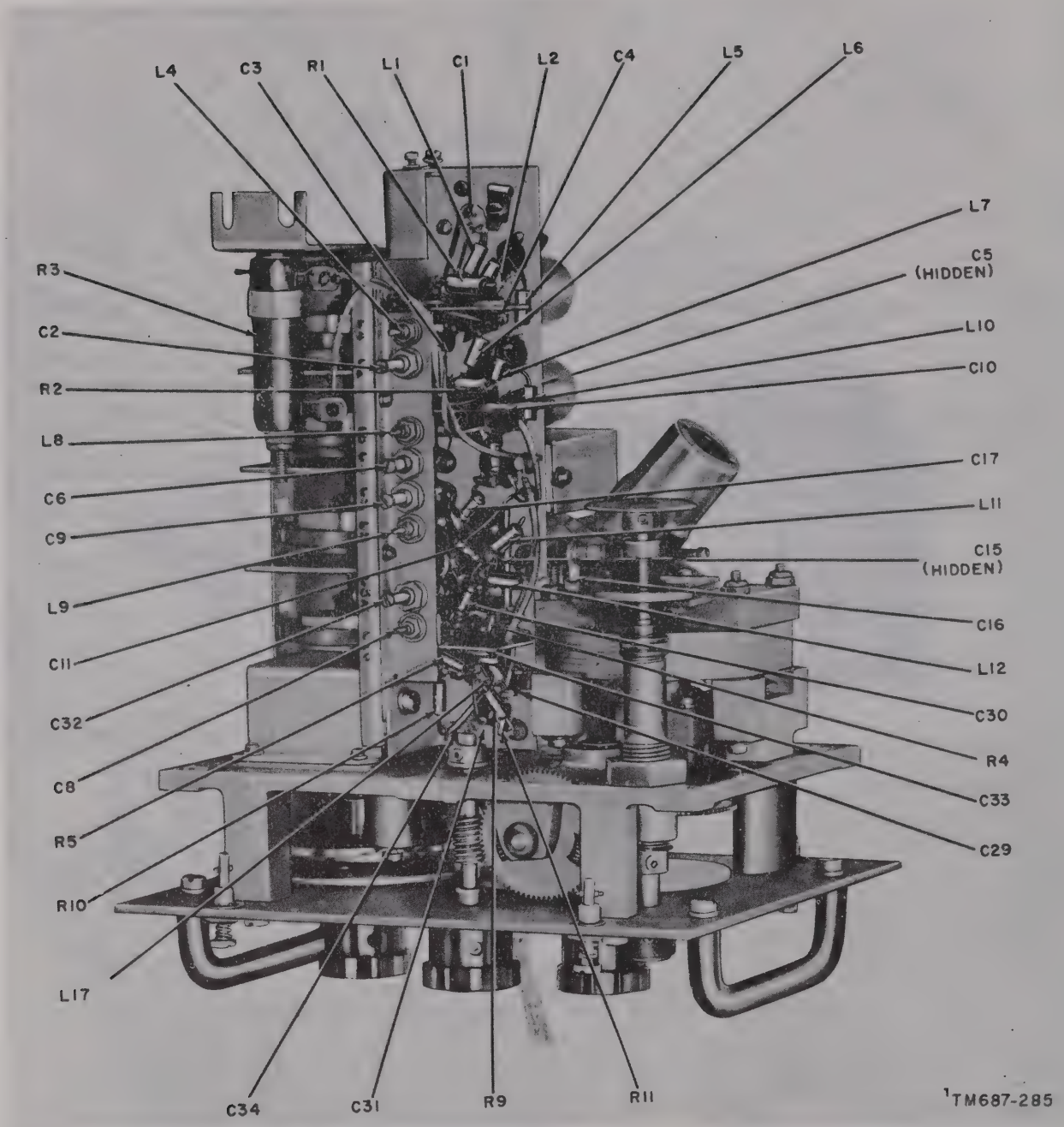

Figure 248. Receiver C-band rf tuner, bottom view.

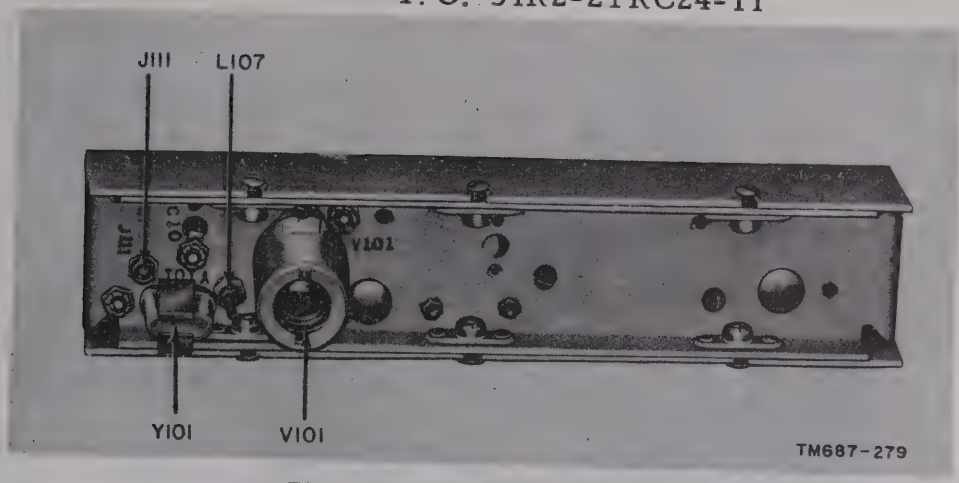

Figure 249. Calibrator, top view.

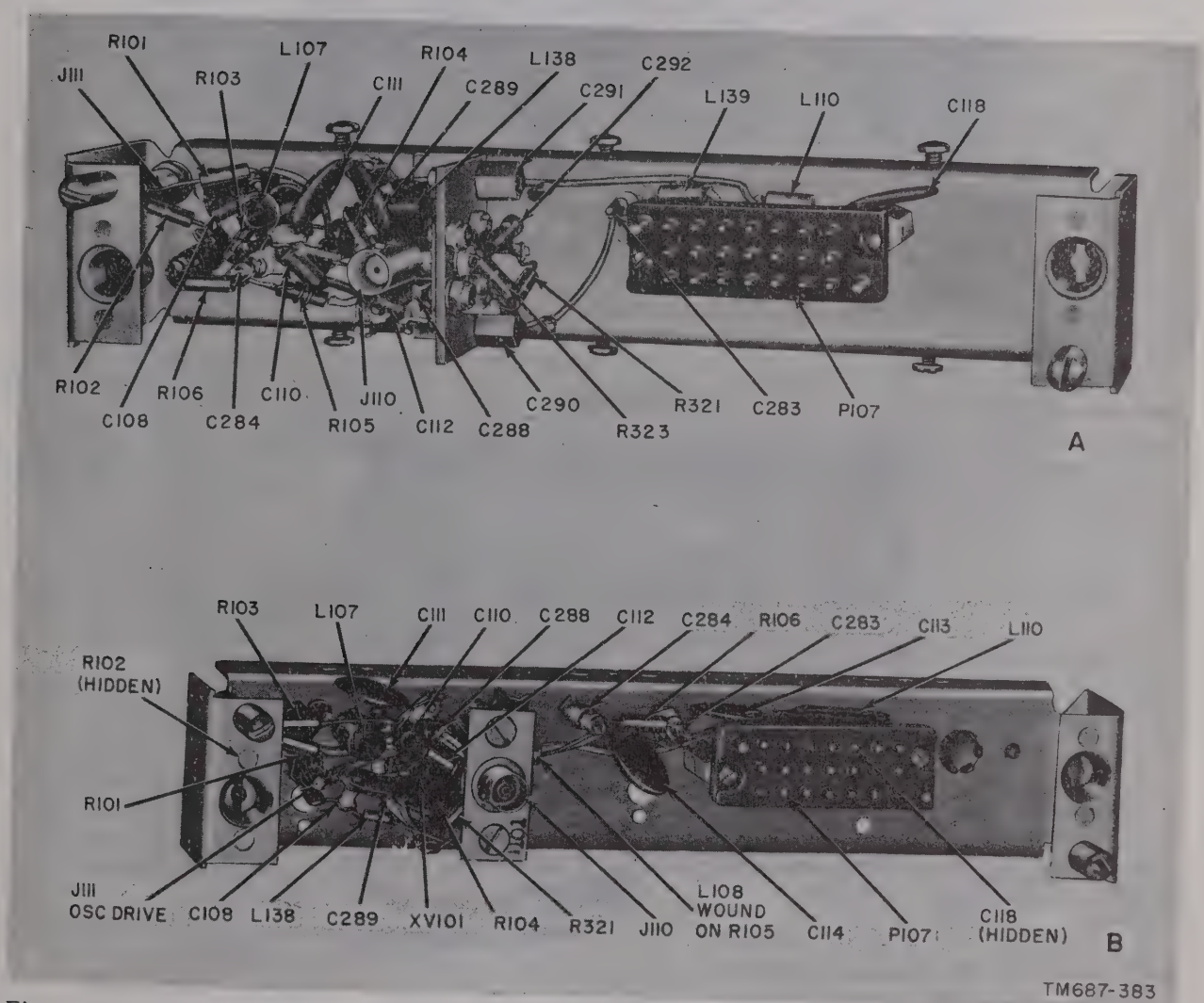

Figure 250. Calibrator, bottom view. (View A, Order No. 16811-Phila-51, serial numbers 1 through 47; view B, Order No. 16811-Phila-51, serial numbers 48 and above, and Order No. 32146-Phila-51.)

381345 O—56——25

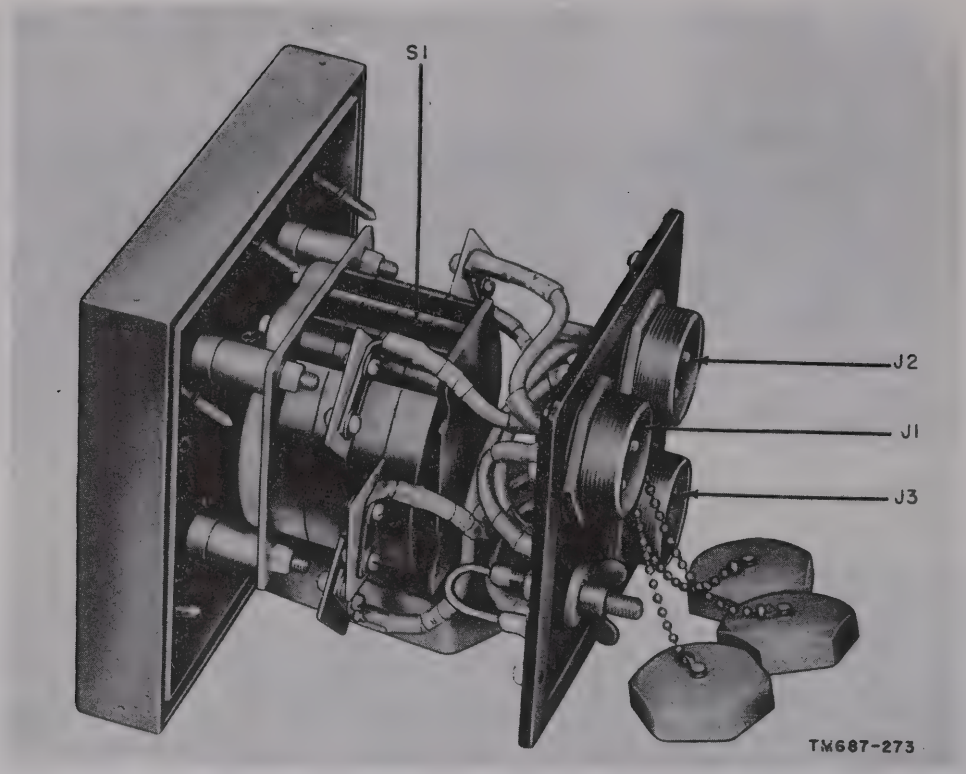

Figure 251. Switchbox, interior view.

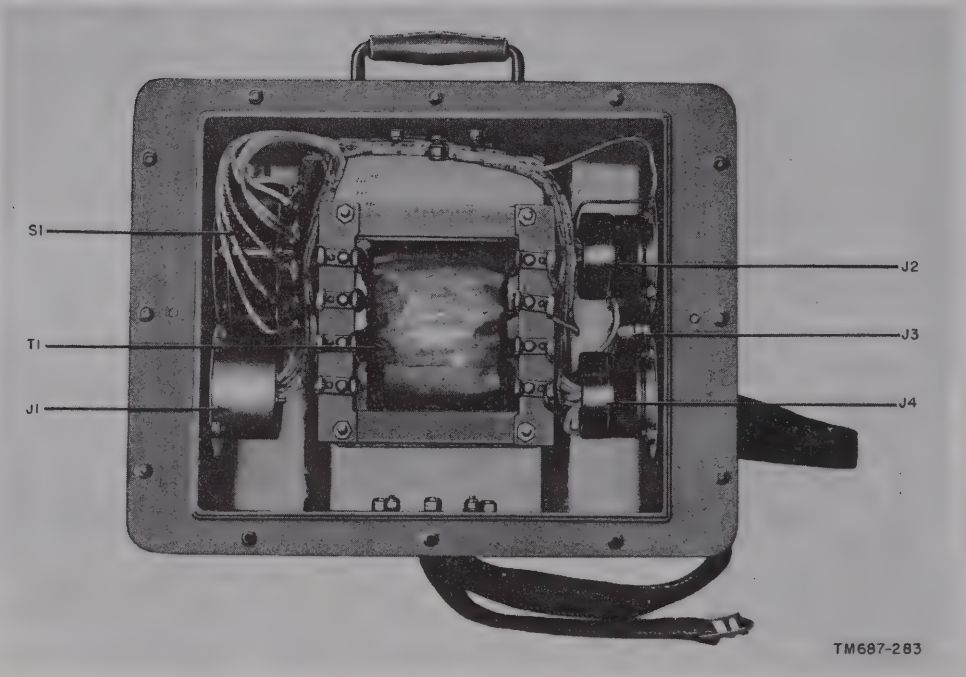

Figure 252. Autotransformer TF–167/TRC.

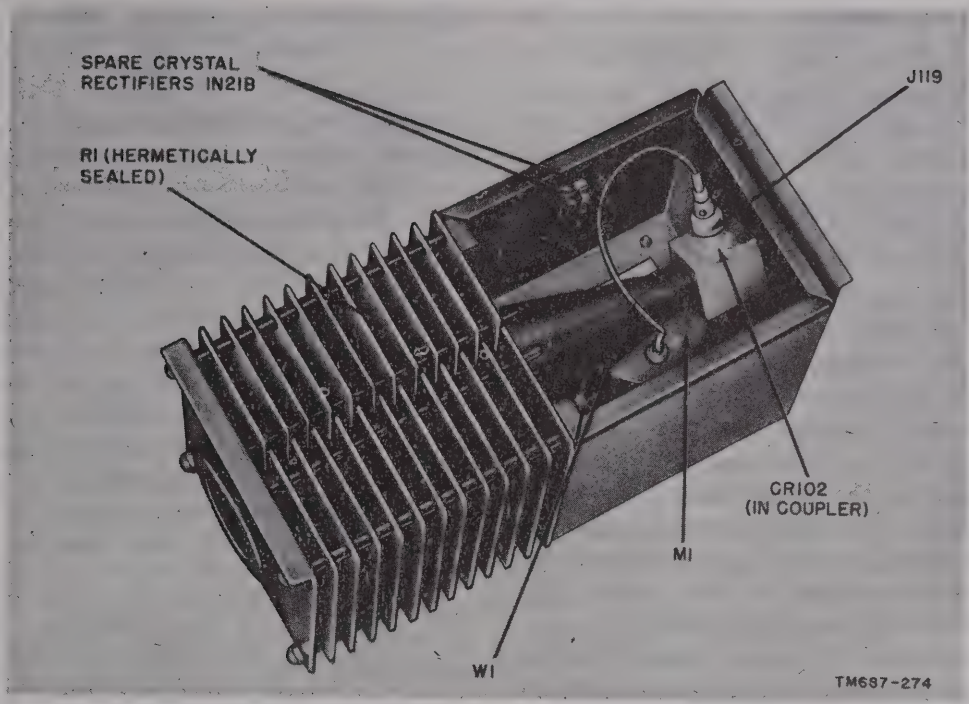

Figure 253. Wattmeter ME-82/U.

325. Checking Crystal Rectifiers

Follow the procedures outlined in *a* and *b* below and refer to figure 254 to check IN69-type crystal rectifiers.

Caution: Increase voltage gradually to prevent burning out the rectifier if the connections are accidentally reversed.

a. Forward Current Test.

(1) Connect the outside terminals of a 20K, 4-watt potentiometer to terminals M and S of TRANSMITTER jack J3 of Power Supply PP-685/TRC.

(2) Connect the negative terminal of a milliammeter (Multimeter TS-352/U) to terminal S of jack J3 of the power supply.

(3) Connect the positive side of the rectifier under test to the center tap of the potentiometer and the negative side of the rectifier to the positive terminal of the milliammeter.

(4) Connect Voltmeter ME-30A/U across the crystal rectifier.

(5) Adjust the potentiometer so that the voltmeter reads +1 volt dc. The milliammeter should read 5 ma or more.

b. Reverse Current Test.

(1) Use the same test circuit connections that were used for the forward current test (*a* above) with the one exception. Reverse the crystal connections so that current will flow in the reverse direction through the rectifier.

(2) Adjust the potentiometer so that the voltmeter reads +10 volts dc. The milliammeter should read .05 ma or less.

(3) Adjust the potentiometer so that the voltmeter reads +50 volts dc. The milliammeter should read .85 ma or less.

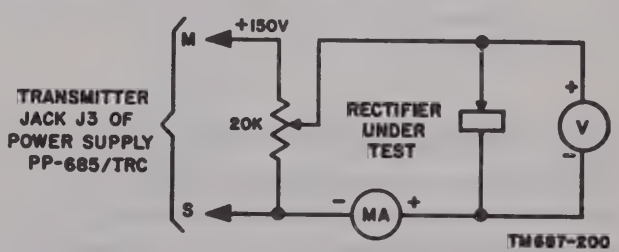

Figure 254. Test arrangement for checking crystal rectifiers.

326. Checking Meters

a. General. When a meter in Radio Set AN/TRC–24 is suspected of being faulty, the accuracy can be checked by substituting an identical meter known to be accurate. Follow the procedure outlined in *b* below to check the accuracy of a meter in the radio set.

b. Procedure for Checking Meters.

(1) Set the necessary controls of the radio set to obtain three different readings on the suspect meter. Note the settings of the controls of the radio set for each reading obtained.

(2) Remove the three screws holding the meter to the front panel. Carefully remove the meter outward through the front panel. Tag and remove the wires connected to the meter terminals. Remove the meter.

Caution: To avoid injury to personnel, be sure that the power input to the radio set is off when removing or replacing meters.

(3) Replace the meter with an identical meter (which is known to be accurate) by reversing the procedure given in (2) above. If the identical meter is obtained from another radio set, this meter can be removed by following the procedure outlined in (2) above.

(4) Adjust the controls of the radio set to the settings noted in (1) above to obtain three different readings on the meter. The readings obtained on the substitute meter should be identical with those obtained on the suspect meter. If these readings are not identical, the suspect meter is faulty and should be replaced.

(5) If the suspect meter is not faulty, replace it in the radio set by reversing the order of instructions given in (2) above.

327. Checking Attendant's Handset

If the attendant's handset is suspected of being faulty, remove it from the HANDSET jack of the receiver and substitute the handset of a spare receiver. If this clears the trouble, the original handset is faulty.

328. Checking Blower Motors of Power Supply PP–685/TRC and Radio Receiver R–417/TRC

Follow the procedure in *a* below to check the blower motor of the power supply and *b* below to check the receiver blower motor.

a. Power Supply Blower Motor.

(1) Disconnect connectors P1 and J2. Connect one side of the ammeter (Multimeter TS–352/U) to the terminal with the green lead on connector P1, and the other side to the corresponding terminal on connector J2. Complete the connection between the other terminals of connectors P1 and J2; use insulated wire jumpers.

Note. If room temperature is less than 80° F, perform the procedure outlined in (2) below to close the thermostat.

(2) Bring a warm soldering iron within close proximity of thermostat S1 and check to see that the thermostat closes.

(3) Turn on the power supply by placing 115V AC (CB1) switch in the ON position.

(4) Check to see that the motor rotates in a counterclockwise direction.

(5) The ammeter should indicate .095 ampere maximum.

b. Receiver Blower Motor.

(1) Disconnect connectors P112 and J120. Connect one side of the ammeter (Multimeter TS–352/U) to the terminal with the green lead on connector P112 and the other side to the corresponding terminal on connector J120. Complete the connection between the other terminals of connectors P112 and J120.

Note. If room temperature is less than 80° F, perform the procedure outlined in (2) below to close the thermostat.

(2) Bring a warm soldering iron near thermostat 31 and check to see that it closes.

(3) Turn on the power supply by operating switch CB1 to the ON position.

(4) Check to see that the motor rotates in a counterclockwise direction.

(5) The ammeter should indicate .095 ampere maximum.

(6) Place switch CB1 in the OFF position and disconnect the ammeter.

329. Checking Afc Motors

Follow the procedure outlined in *a* through *h* below and refer to figure 255 to check an afc motor of the transmitter or of a receiver tuner.

a. Connect a 20K, 4-watt potentiometer across a source of 115 volts ac (autotransformer TF–167/TRC or spare power unit).

b. Connect an ac voltmeter (Multimeter TS–352/U) between one of the outside terminals and the center terminal of the potentiometer. Adjust the potentiometer for a minimum indication on the voltmeter.

c. Connect the green and yellow leads of the motor to the potentiometer terminals to which the voltmeter is connected.

d. Turn off the power and connect the gray lead of the motor to one of the outside terminals of the potentiometer. Connect the black lead of the motor through a .6-μf capacitor to the other outside terminal. Turn on the power.

e. Adjust the potentiometer for an indication of 2.5 volts on the voltmeter. The motor should start and run from any rotor position.

f. Adjust the potentiometer for an indication of 1.5 volts. The motor should run smoothly for at least 1 rotor revolution.

g. Adjust the potentiometer for an indication of 115 volts. The rotor should make at least 1 revolution in 36 seconds.

h. Turn off the power and disconnect the test circuit.

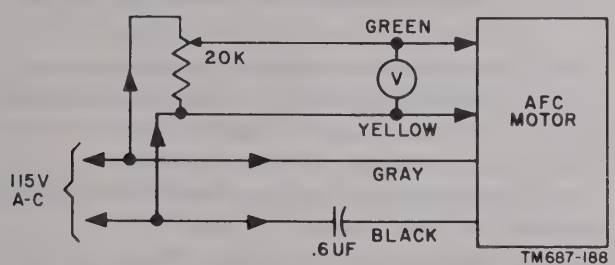

Figure 255. Test arrangement for checking afc motors.

330. Checking Transmitter Blower Motor

Follow the procedures outlined in *a* through *h* below and refer to figure 256 for testing the blower motor.

a. Swing back the hinged upper chassis to reach the blower motor.

b. Check to see that the power supply is off and the front-panel high-voltage interlock is open.

c. Disconnect the 115-volt lead from terminal 1 at terminal board TB122. Connect one side of an ac ammeter (2-ampere range or better) to terminal 1 and the other side to the 115-volt lead.

d. Connect ohmmeter (Electronic Multimeter TS–505/U to terminals 1 and 2 of terminal board TB123.

Caution: Do not short the front-panel interlock because the ohmmeter will become damaged.

e. Turn on the power supply and read the ammeter. Check to see that the reading does not exceed 1.25 amperes.

f. Check to see that the ohmmeter reads zero when the motor is running at 50-percent maximum speed or more.

g. Turn off the power supply and check to see that the ohmmeter indicates open as the motor speed drops to 25 percent of maximum speed or less. If an open circuit is not indicated, interlock switch S112 is defective.

h. Disconnect the ammeter and the ohmmeter from the circuit. Reconnect the 115-volt lead to terminal 1 of terminal board TB122.

331. Checking Thermostats

The thermostats of the AN/TRC–24 close when the temperature is raised to 80°F. and open when the temperature is lowered to 70°F. Check the thermostats together with the blower motors (par. 328).

332. Checking Circuit Breakers

The circuit breakers in the radio set have a dual function. They serve both as on-off power switches and as overload protectors.

a. Checking Circuit Breaker as Switch.

(1) Connect an ohmmeter (Multimeter TS–352/U) across the terminals of the circuit breaker.

(2) Place the circuit breaker in the ON position. (Be sure that the power is disconnected when checking resistance.) The ohmmeter should read zero to indicate continuity between the terminals.

(3) Place the circuit breaker in the OFF position. The ohmmeter should read infinity to indicate lack of continuity.

b. Checking Circuit Breaker as Overload Protector. The circuit breakers have been designed to provide overload protection by trip-

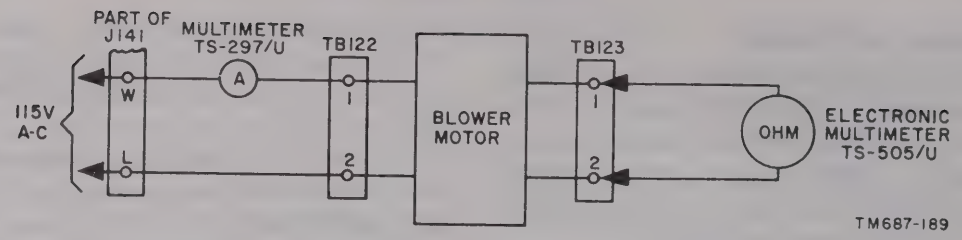

Figure 256. Test arrangement for checking transmitter blower motor.

ping in 2 seconds or less when the current flowing through them is at least four times the rated capacity, between 3 and 10 seconds when the current is twice the rated capacity and within 1 hour when the current is 1¼ times the rated capacity. If the circuit breaker continuity is satisfactory (*a* above) it is not ordinarily necessary to check the overload protection afforded by a circuit breaker.

333. Checking Interlock Circuits for Continuity

a. Checking Continuity of Transmitter and Power Supply Interlock Circuit.

Caution: Dangerous voltages are present in the power supply and the transmitter; be very careful when making measurements.

(1) Disconnect Electrical Special Purpose Cable Assembly CX–2253/U from the TRANSMITTER jack of the power supply.

(2) Place the 115V AC switch on the power supply in the ON position.

Note. Wait at least 1 minute after operating the 115V AC switch to the ON position before making any measurements.

(3) Using the 0- to 20-volt dc range of Electronic Multimeter TS–505/U, check to see that 12 volts dc are present between pins V and N of power-supply TRANSMITTER jack J3.

(4) Place the 115V AC switch on the power supply in the OFF position.

(5) Reconnect Electrical Special Purpose Cable Assembly CX-2253/U to the TRANSMITTER jack of the power supply.

(6) Remove the rf tuner from the transmitter and connect a 100-ohm, 1-watt resistor between pins 6 and 7 of transmitter jack J113. Connect the leads of the TS–505/U across the 100-ohm resistor and set the controls of the TS–505/U to the 0- to 10-volt dc range.

(7) Set the 115V AC switch on the power supply to the ON position and wait at least 1 minute before making any measurements. The reading on the TS–505/U should be approximately 6 volts. This indicates that the interlock circuit of the transmitter and power supply is continuous. If the interlock circuit is not continuous, proceed as instructed in (8) below to determine if the trouble is in the power supply.

(8) Using the 0- to 1,000-ohm range of Electronic Multimeter TS–505/U, check the circuit between terminals 6 and 7 of the rf tuner jack. The ohmmeter should read zero to indicate continuity between the terminals. Follow the procedure given in (4), (1) and (2) above. Using the 0- to 1,000-ohm range of Electronic Multimeter TS-505/U, check for continuity between terminals P and N of power-supply TRANSMITTER jack J3. If the open is not in the power-supply interlock circuit, refer to paragraph 250 and make continuity checks in the transmitter interlock circuit.

b. Checking Continuity of Receiver Interlock Circuit.

(1) Disconnect Electrical Power Cable Assembly CX-2256/U from the AC POWER jack of the receiver.

(2) Place the receiver POWER switch in the ON position.

(3) Using the 0- to 1,000-ohm range of Electronic Multimeter TS–505/U, check for continuity between the two terminals of AC POWER jack J121 on the front panel of the receiver.

(4) If a discontinuous indication is obtained in the step in (3) above, refer to paragraph 299 and make continuity checks of the receiver interlock circuit.

334. Replacement of Parts

a. General. A replacement part should be the exact duplicate of the original part and should occupy the same position. When an exact replacement is not available, use a part that conforms to the specifications of the original part.

(1) A part having the same electrical value but a different physical size than the original part may cause serious trouble in high-frequency circuits.

(2) When replacing parts, use the same ground connections as in the original wiring.

(3) Before unsoldering a part, note the position of the leads and dress the leads of the replacement part so that they occupy the same position.

(4) If a part, such as a transformer or a switch, has a number of connections, tag each lead before unsoldering it.

(5) Be careful not to damage leads of near-by circuit elements when replacing a part.

(6) Make well-soldered joints. A poorly soldered joint is one of the most difficult faults to find.

(7) Be careful that drops of solder and pieces of loose wire do not fall into the set.

Caution: The location, positioning, and length of leads of circuit elements are critical in the rf tuners, if. amplifiers, rf exciter, pulsed oscillator, and afc mixer of the transmitter and in the rf tuners, if. amplifiers, limiters, and discriminator of the receiver. Substituted parts must be in exactly the same position and have the same length and position of leads as the replaced parts.

b. Replacement of Receiver Afc Motor.

(1) To reach the receiver afc motor, follow the procedure outlined in (*a*) through (*f*) below.

(*a*) Loosen the four cam-lock fasteners in the top cover of the receiver tuner and remove the cover.

(*b*) Disconnect connectors P2 and P3 from connectors J1 and J2, respectively.

(*c*) Open the cable clamp, which is located at the upper right, and free the cable from the clamp.

(*d*) In the receiver C-band tuner, loosen the two screws which hold the rear of the tuner chassis to the bottom of the large casting. Omit this step for the receiver B-band rf tuner.

(*e*) Remove the four hexagonal screws which hold the front casting and chassis to the rear casting.

(*f*) Withdraw the front casting and chassis from the rear casting.

(2) At connector P5, unsolder the leads that connect to the afc motor.

(3) Loosen the set screws that secure the clutch plate to the motor shaft and remove the clutch plate.

(4) Remove the two screws that hold the motor to the bracket. Pull the bracket forward and clear of the motor.

(5) Pull the afc motor forward and out.

(6) To install a new afc motor, mount the rubber sock from the old motor on the new one, and reverse the order of instructions given in (1) through (5) above. When the clutch plate is positioned on the motor shaft, see that distance from the front face of the clutch plate to the front (open end) of the large casting is 3-5/32 inches. The distance between the rear of the tuner front panel and the face of the front clutch plate should be 4-9/16 inches. These clutch-plate distances can be adjusted by loosening the set screws that secure the plates to the respective shaft.

c. Replacement of Transmitter Afc Motor.

(1) To reach the afc motor, remove the rf exciter plug-in assembly from the transmitter (par. 162).

(2) Remove the top and inner shields from the rf exciter assembly.

(3) From the top of the assembly, remove the two screws that secure the clamp (located on the bottom of the assembly) around the afc motor. Remove the clamp (fig. 216).

(4) Loosen the set screws that secure the clutch plate to the motor shaft.
(5) Remove the nuts that secure the motor to the bracket.
(6) Clear the motor of the bracket by pulling slightly back, removing the clutch plate, and twisting the rear of the motor up.
(7) Loosen the nuts that secure connector P105 to the plug-in assembly.
(8) At connector P105, unsolder the yellow, green, and gray leads from terminals 11, 12, and 24, respectively. Unsolder the black motor lead from capacitor C146.
(9) To install a new afc motor, reverse the order of instructions given in subparagraphs (1) through (8) above. Check to see that the distance between the faces of the two clutch plates is between .07 and .09 inch.

d. Replacement of AFC Control Knobs.

(1) Manually rotate the afc capacitor rotor to the fully meshed position (maximum capacitance). In the receiver B-band rf tuner, the afc capacitor is C19; in the receiver C-band rf tuner, C24; in the transmitter, C145.
(2) For the transmitter or the receiver B-band rf tuner, set the AFC control knob to —5 and for the receiver C-band rf tuner to +5. Do not disturb the afc capacitor setting. Tighten the set screws securing the control knob to the capacitor drive shaft.

335. Replacement of Parts in 60-cps Modulator Plug-in Assemblies (For Transmitters Bearing Serial Numbers 1 through 125 Procurred on Order No. 16811-Phila-51)

Following the replacement of tube V124 in 60-cps modulator plug-in assemblies (fig. 208) contained in transmitters bearing serial numbers 1 through 125, replace resistors R295, R299, and R300 (fig. 209) with resistors having the same value as those in plug-in assemblies contained in transmitters bearing serial numbers 126 through 2496 (note 19, fig. 268). If resistor R295, R299, or R300 in plug-in assemblies contained in transmitters bearing serial numbers 1 through 125 becomes defective, replace all three resistors with resistors of the new values. This paragraph does not apply to sets procured on Order No. 32146–Phila–51.

336. Coaxial-Type Cable Repair

The coaxial cables used in the AN/TRC–24 have four layers: an outer jacket, copper braid, polyethylene insulation, and a No. 22 copper conductor (fig. 257). To install a coaxial connector on one end of these cables, proceed as follows:

a. Remove ½ inch of the outer jacket.
b. Disassemble the connector.
c. Slide the threaded cap nut over the cable.
d. Slide the thin washer over the copper braid.
e. Slide the rubber gasket over the copper braid.
f. Slide the chamfered sleeve over the copper braid.
g. Flair the braid around the chamfered sleeve.
h. Clip excess braid even with the outer edge of the chamfer.
i. Bare inner conductor by removing ⅛ inch of insulation from edge of cable.
j. Place contact pin over bared inner conductor.
k. Solder the conductor wire to contact pin through solder hole.
l. Insert cable into assembly shell.
m. Tighten the threaded cap nut securely. When the cable and connector are properly assembled, the socket tip should be flush, or not more than 1/32 inch beneath the edge of the coupling.

337. Refinishing

Instructions for refinishing are given in paragraph 144. Further instructions for refinishing badly marred panels are given in TM 9–2851, Painting Instructions for Field Use.

338. Disassembly, Lubrication, and Reassembly of Amplifier AM–912/TRC

Follow the procedures outlined in *a* through *g* below for disassembly of Radio Frequency Amplifier AM–912/TRC (transmitter B-band rf tuner). After disassembly has been accomplished, follow the procedures given in *g* below for reassembly of the tuner.

a. Removal of Front Panel. Follow the pro-

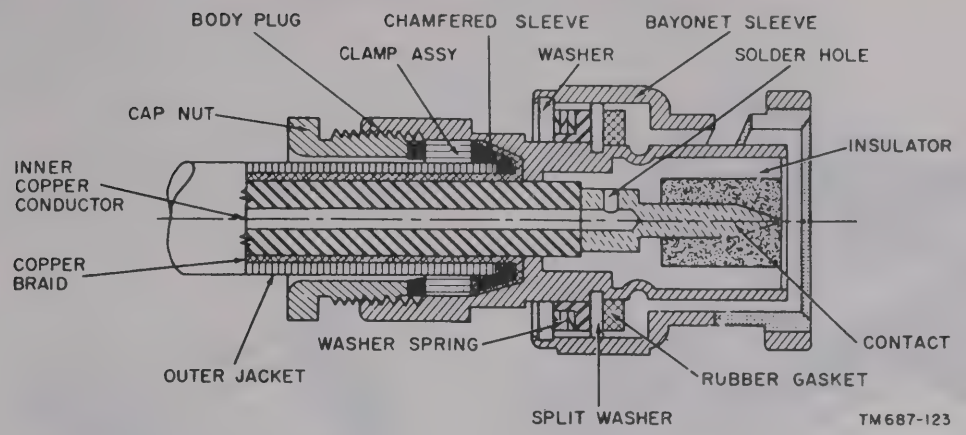

Figure 257. Attaching connector to coaxial cable.

cedure given for Radio Frequency Amplifier-Multiplier AM–915/TRC (par. 339*a*).

b. Gaining Access to Tape Drums. The disassembly procedure for gaining access to tape drums for the purpose of cleaning and lubrication is outlined in (1) and (2) below. Before reassembly, clean and lubricate tape drums in accordance with the lubrication chart (fig. 104).

(1) Unhook the tape (1, fig. 258) from the follower arm (6) on the lead screw, pull the tape on the storage drum (2); hold the storage drum to unhook the tape.

Caution: Do not release the tape unless the storage drum is held and allowed to unwind slowly, because damage to the spring may result.

(2) Remove the retaining ring (4) that secures the tape drum cover (5) to the tape drum.

c. Gaining Access to Shorting Plungers and Cavity Cylinders. As viewed from the front panel, the grid cavity (fig. 259) is located in the left-hand side of the tuner, and the plate cavity is located in the right-hand side. The disassembly procedure for reaching the grid cavity cylinder and shorting plunger is given in (1) through (5) below. The procedure for reaching plate cavity cylinder and shorting plunger is given in (6) through (9) below. Before reassembly, clean and lubricate the cavity cylinders and shorting plungers in accordance with the lubrication chart (fig. 104).

(1) Remove the front panel as outlined in paragraph 339*a*.

(2) Remove the grid cavity front casting and shorting plunger assembly (4, fig. 259) by removing the six screws (2) and six lock washers (3) that secure the assembly to the front casting.

(3) Remove the cam screw on the bottom of the grid follower.

(4) Remove the front casting and shorting plunger (4) by pulling the casting away from the outer cylinder.

(5) To reach the inner cylinder assembly (5), remove the four screws (6) and lockwashers (7) that secure the cylinder (1) to the vacuum-tube inclosure.

(6) Remove the plate cavity front casting and shorting plunger assembly by removing the six screws (8) that secure the assembly to the front casting.

(7) Remove the cam screw on the bottom of the plate follower.

(8) Remove the front casting and shorting plunger (9) by pulling the casting away from the cylinder.

(9) To obtain better access to the inner cylinder assembly, remove the four screws and lockwashers (10) that secure the outer cylinder (11) to the vacuum-tube inclosure.

d. Removal of Tube Socket.

(1) Remove the rear cover and vacuum tube 4X150A as described in paragraph 150.

(2) Remove the casting (fig. 223) at the top rear of the tuner as outlined in (*a*) through (*d*) below.

(*a*) Remove the nuts (13) that secure connectors P1 and P2 to the casting.

(*b*) Remove the two screws (9) from each side of the casting.

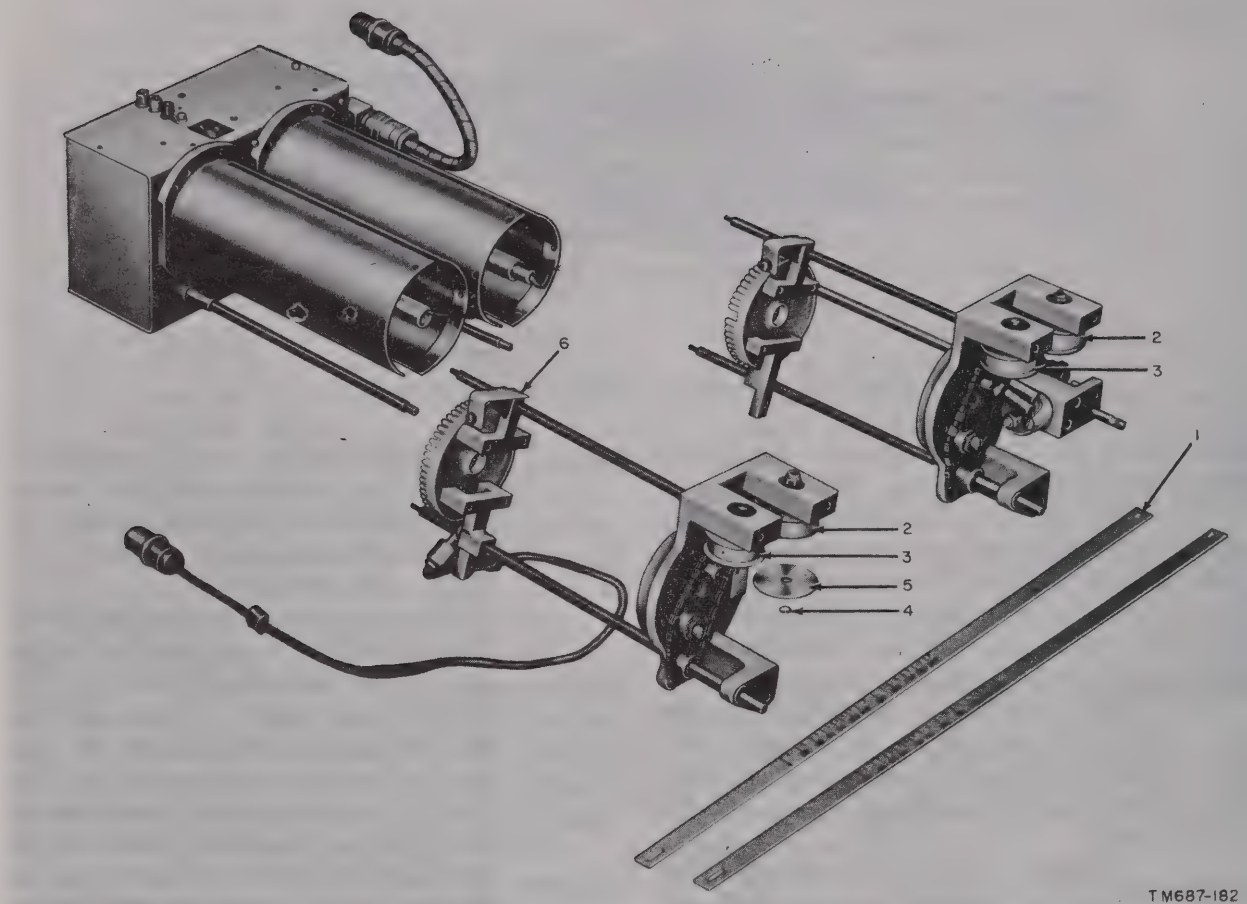

1 Tape
2 Storage drum
3 Drum pulley
4 Retaining ring
5 Cover
6 Follower arm

Figure 258. Transmitter B-band rf tuner, partially exploded view.

(*c*) Remove the two screws (11) that secure the casting to connector P2 bracket (12).

(*d*) Remove the four screws (14) that secure the casting to the tube inclosure.

(3) Remove the bottom scuff plate (16) as instructed in (*a*) through (*c*) below.

(*a*) Remove the four screws (15) from each side of the scuff plate.

(*b*) Remove the two screws (17) that secure the scuff plate to the connector P2 bracket.

(*c*) Remove the two screws (18) that secure the scuff plate to the tuner.

(4) Remove the connection between capacitor C9, resistor R8, and the terminal on top of capacitor C8 (fig. 222).

(5) Remove the screw that secures the terminal to capacitor C8, and unscrew the capacitor.

(6) Remove the air barrier.

(7) Unsolder the connection between capacitor C15 and the strap (16) on the vacuum-tube plate and remove the four screws and lock-washers (15, fig. 259) that hold the plate strap (16) to the insulated bushings (14).

(8) Remove the wires to capacitors C5, C6, and C7.

(9) Remove the four screws and lockwashers (12) that secure the partition (13) on which the tube socket is mounted.

(10) Carefully unsolder the connections between the socket and the capacitors.

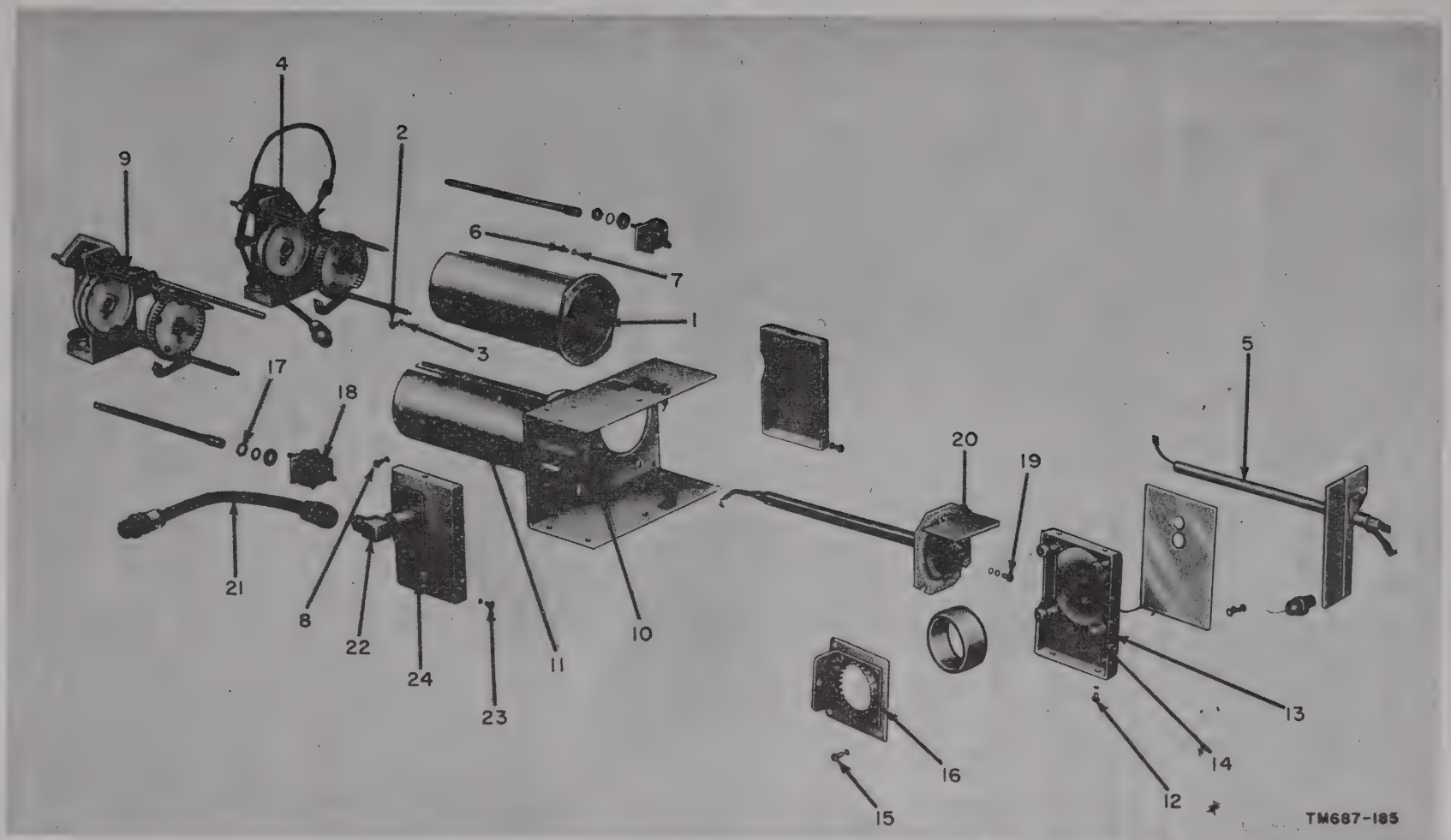

1	Grid cavity cylinder	7	Lockwasher	13	Partition	19	Screw
2	Screw	8	Screw	14	Bushing	20	Insulating plate
3	Lockwasher	9	Shorting plunger	15	Screw and lockwasher	21	Connector P3
4	Shorting plunger	10	Screw	16	Plate connection assembly	22	Connector J1
5	Inner cylinder	11	Plate cavity cylinder	17	Nut	23	Screw and lockwasher
6	Screw	12	Screw and lockwasher	18	Capacitor	24	Partition

Figure 259. Transmitter B-band rf tuner, exploded view.

(11) Remove the four insulated bushings (14) from the underside of the partition.

(12) Remove the four screws that secure the socket clamp plates, and lift out the socket.

e. Removal of Capacitor C15.

(1) Disconnect the wire connecting stand-off E1 to capacitor C15 at stand-off E1.

(2) Perform the steps outlined in *d*(1) through (7) above.

(3) Remove the screws (15, fig. 259) that secure the connection insulators and remove the plate connection assembly (16).

(4) Remove the pin in the cam coupling at capacitor C16.

(5) Unsolder the connection from capacitor C16 to the casting of capacitor C15 (fig. 222).

(6) Remove the capacitor C16 mounting nut (17) and remove capacitor C16 (18, fig. 259).

(7) Remove the four screws (19) that secure the insulating plate (20) that mounts capacitor C15, and remove capacitor C15 and the insulating plate.

(8) Remove the screws that secure capacitor C15 to the insulating plate.

f. Removal of Output Coupling Capacitor Assembly.

(1) Before removing the output coupling capacitor assembly, remove right-hand side as outlined in (*a*) through (*e*) below.

(*a*) Remove the two screws that secure the right-hand side to the front panel and the handle.

(*b*) Remove the two screws that secure the right-hand side to the casting.

(*c*) Remove the four screws that secure the right-hand side to the scuff plate.

(*d*) Remove the two screws that secure connector P2 bracket to the casting, and the two screws that secure the bracket to the scuff plate.

(*e*) Remove the two screws that secure the scuff plate to the tuner.

(*f*) Remove the four screws that secure the scuff plate to the left-hand side.

(2) Remove connector P3 (21) from connector J1 (22).

(3) Remove the pin that secures the output coupling shaft to the capacitor and connector (22) assembly.

(4) Remove the screws and lockwashers (23) that secure the capacitor mounting partition (24) to the tube inclosure.

(5) Remove the three screws that secure the capacitor mounting plate assembly to the partition.

g. Reassembly. Reassemble the tuner by reversing the order of disassembly giving special attention to the procedures outlined in (1) through (3) below.

(1) Place the shorting plunger in its maximum capacity position toward the vacuum tube, and the tuning capacitor in its minimum capacity position.

(2) Connect the tuning capacitor to the cam bushing with the cam screw.

(3) Wind the tape spring approximately 5 to 6 turns when the tape is in the maximum position toward the vacuum tube.

Caution: Do not release the tape drum when the spring is wound, because damage to spring may result.

339. Disassembly, Lubrication, and Reassembly of Radio Frequency Amplifier-Multiplier AM–915/TRC

Radio Frequency Amplifier-Multiplier AM–915/TRC (transmitter C-band rf tuner) consists of a multiplier cavity unit on the left-hand side of the tuner and a power-amplifier cavity unit on the right-hand side. Remove the vacuum tubes as described in paragraphs 149 and 151. Follow the procedures outlined in subparagraphs *a* through *g* below for disassembly of the tuner. After disassembly has been accomplished, follow the procedure outlined in subparagraph *h* below for reassembly of the tuner.

a. Removal of Front Panel. The procedure for removing the front panel is outlined in (1) through (4) below.

(1) Remove the top and bottom covers of the tuner by removing the eight screws and eight lockwashers that secure the covers to the tuner.

(2) Loosen the set screws and remove the six control knobs (1, fig. 260).

(3) Remove the four screws (2) and four lockwashers (3) that secure the two handles (4).

(4) Remove the six screws (5), six lockwashers (6), and six flat washers (7) that secure the cavities to the front panel (8).

b. Gaining Access to Tape Drums. The disassembly procedure for gaining access to tape drums for the purpose of lubrication is outlined in (1) through (6) below. Follow the same procedure for the disassembly of the multiplier and power-amplifier tape drums. Before reassembly, clean and lubricate the drums in accordance with the lubrication chart (fig. 107).

(1) Remove the front panel (*a* above) after setting the GRID control to minimum frequency.

(2) Unhook the grid tape (1, fig. 261) from the gear-driven drum (2); pull the tape on the storage drum (3); hold the storage drum to unhook the tape.

Caution: Do not release the tape unless the storage drum is held and allowed to unwind slowly, because damage to the spring could result.

(3) Remove the three screws (4) that secure the small casting (5) to the large casting (6).

Caution: Do not remove the small casting unnecessarily. Its removal will necessitate alignment of capacitor C11 with respect to the grid shorting plunger (*i* below).

(4) Loosen the set screw on the gear (7) and slide the gear off the drum shaft.

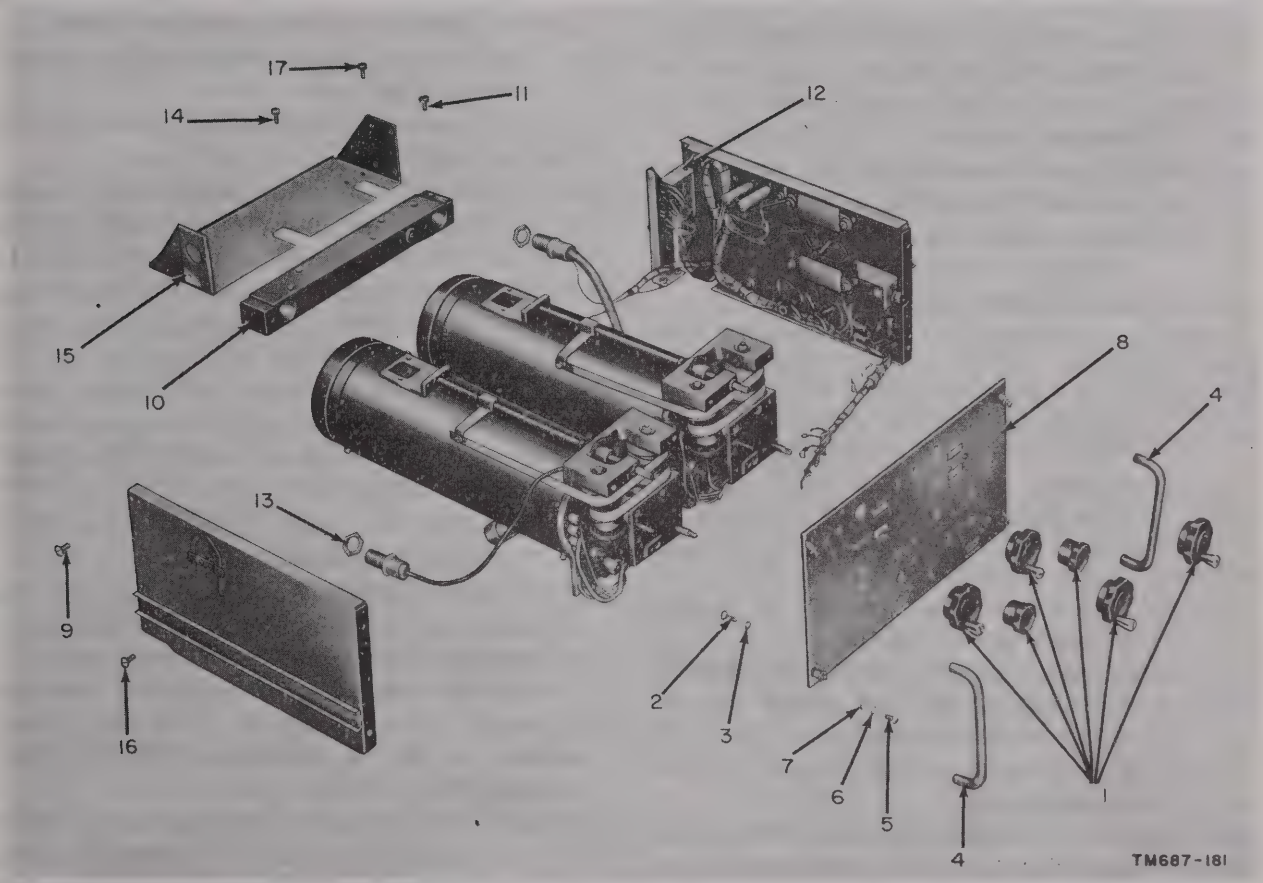

1	Control knobs	7	Washer	13	Nut
2	Screw	8	Front panel	14	Screw
3	Lockwasher	9	Screw	15	Scuff plate
4	Handle	10	Air casting	16	Screw
5	Screw	11	Screw	17	Screw
6	Lockwasher	12	P2 bracket		

Figure 260. Transmitter C-band rf tuner, exploded view.

(5) Remove the retaining ring (8) and lift out the storage drum shaft cover (9).

(6) Remove the screw, lockwashers, and flat washer (10) that secure the plate tape (11) to the screw follower (12).

c. Removal of Plate Contact and Capacitor Assembly.

Note. The procedure for removing the plate contact and capacitor assembly outlined in (1) and (2) below is the same for the multiplier and power-amplifier cavities.

(1) Remove the six screws (1, fig. 262) and the six lockwashers (2) that secure the plate contact and the capacitor assembly (3) to the outer cylinder (4).

(2) Remove the plate wire and pull the assembly out of the cavity.

d. Removal of Air Casting.

(1) Remove the two screws (9, fig. 260) on each side of the air casting (10).

(2) Remove the two screws (11) that secure the casting to connector P2 bracket (12).

(3) Remove the nuts (13) that secure connectors P1 and P5.

(4) Remove the two screws (14) that secure the casting to each cavity.

e. Removal of Outer Cylinder.

Note. The procedure for removing the outer cylinder outlined in (1) through (4) below is the same for the multiplier and power-amplifier assemblies.

(1) Adjust the output assembly (1, fig. 263) to its minimum coupling position.

(2) Remove the three screws (2) and three lockwashers (3) that secure the output assembly to the outer cylinder (4).

Note. The output shaft may be displaced to remove the outer cylinder.

(3) Remove the eight screws (5) and eight lockwashers (6) that secure the output assembly to the front casting (7).

(4) Pull the outer cylinder away from the front casting.

f. Removal of Inner Cylinder. The procedure for removing the inner cylinder from the multiplier cavity is outlined in (1) through (4) below. The procedure for removing the inner cylinder from the power-amplifier cavity is outlined in (5) through (13) below.

(1) To remove the inner cylinder of the multiplier, remove the screw (5, fig. 262) and lockwasher (6) that secure the capacitor C11 assembly (7) to the inner cylinder (8).

(2) Remove the four screws (9) and four lockwashers (10) that secure the inner cylinder to the front casting (11).

(3) Unsolder the three wires at C1, C2, and C3 that pass through the small tube.

(4) Pull the inner cylinder assembly away from front casting.

(5) To remove the inner cylinder of the power amplifier, remove the two screws (8, fig. 263), two lockwashers (9), plate (10), and air tube (11).

(6) Remove the wires at capacitors C17 and C19.

(7) Remove the contact and capacitor assembly (12) secured by four screws (13) and four lockwashers (14).

(8) Remove capacitor C26 at the cathode contact.

(9) Remove the wires at capacitors C18 and C20.

(10) Remove the two screws that secure the coaxial clamp assembly to the front casting and remove P3 from J1.

(11) Remove the four screws (17) and four lockwashers (18) that secure the inner cylinder (19) to the front casting (7).

(12) Remove the shorting plunger assembly (15) by turning the control shaft to advance the assembly off the threaded shafts (16).

(13) Pull the inner cylinder away from the front casting.

g. Removal of Inner Tubing Assembly. The procedure for removing the inner tubing assembly from the multiplier cavity is outlined in (1) through (9) below. The procedure for removing the inner tubing assembly from the power-amplifier cavity is outlined in (10) through (12) below.

(1) To remove the inner tubing assembly of the multiplier, remove the strap connection (12, fig. 262) at the terminal mounted on the inner tubing and remove the wire to capacitor C9.

(2) Unsolder the wire at capacitor C10.

(3) Unscrew capacitor C9 (13).

(4) Remove the retaining ring (14) to

permit removal of the grounding spring washer.

(5) Remove the four screws (15) and four lockwashers (16) that secure the tubing flange to the front casting.

(6) Remove the screw (17) and lockwasher (18) that secure the coaxial cable clamp (19).

(7) Remove the pin that secures capacitor C11 (20) to the insulated shaft (21), and remove the capacitor.

(8) Remove connector P3 from connector J1.

(9) Rotate the control shaft to remove the screw follower from the threaded shaft. Remove the tubing assembly and the shorting plunger assembly by rotating the control shaft until the plunger is free from the control-shaft threads.

(10) To remove the inner tubing assembly of the power amplifier (fig. 263), remove the wire at capacitor C24.

(11) Remove the four screws (20), four lockwashers (21), and four shouldered insulating bushings (23) that secure the tubing flange to the front casting.

(12) Remove the tubing assembly (22) and the shorting plunger assembly by rotating the control shaft until the plunger is free from the control-shaft threads.

h. Reassembly. Reassemble the tuner by reversing the order of disassembly giving special attention to the instructions outlined in (1) through (5) below.

(1) Check to see that contact fingers of all shorting plungers. Make proper contact.

(2) Check the wiring of each tube and all circuit components before assembling the tube.

(3) Check to see that the output coupling has been assembled so that movement corresponds to the front-panel marking.

Note. If the large shorting plunger has been removed it will be necessary to remove the front casting from the front panel, and wires from the terminal strip.

(4) Check to see that the assembled shorting plunger is parallel within .010 inch to the machined rear surface of the front casting.

(5) Check to see that the insulators are not shorted during reassembly, and are free from dirt and chips.

i. Tape Adjustment. Follow the procedure outlined in (1) through (7) below for adjusting the multiplier grid tape. Follow the procedure outlined in (8) through (11) below for adjusting the power-amplifier grid tape.

(1) To adjust the multiplier grid tape, loosen the set screws in the gear of the gear-driven tape drum and in the worm wheel that controls capacitor C11.

(2) Move the multiplier grid-cavity shorting plunger to the position closest to the vacuum tube.

(3) Adjust capacitor C11 to minimum capacity, lock the set screws in the worm wheel on the shaft, and be sure that the gear is central with the worm.

(4) Move the grid-cavity shorting plunger so that the forward face of the lead-screw follower, as viewed from the front-panel end of the tuner, is $5\frac{3}{16}$ inches from the rear face of the tape-drum casting.

(5) Wind the storage drum approximately 5 to 6 turns toward the gear-driven drum, and hold the storage drum. Then adjust the tape until channel 200 coincides with the marking on the casting.

(6) Allow $\frac{3}{32}$ inch for the tape to settle back toward the gear-driven drum.

(7) Lock the set screws that secure the worm gear; make sure that the gear is centered on the worm.

(8) To adjust the power-amplifier grid tape, loosen the set screws in the gear of the gear-driven drum and move the grid-cavity shorting plunger so that the forward face of the lead screw follower, as viewed from the panel end of tuner, is $5\frac{3}{16}$ inches from the rear face of the tape-drum casting.

(9) Wind the spring-driven drum approximately 5 to 6 turns toward the gear-driven drum and hold the spring-driven drum. Then adjust the tape

until channel 200 coincides with the marking on the casting.

(10) Allow $\frac{3}{32}$ inch for the tape to settle back toward the gear-driven drum.

(11) Lock the set screws that secure the worm gear; make sure that the gear is centered on the worm.

340. Removal of Upper Chassis from Transmitter

a. Separate the upper and lower sections of the transmitter by following the procedure given in paragraph 157*a* through *d*.

b. Disconnect connectors P104 and J107 at the rf exciter assembly.

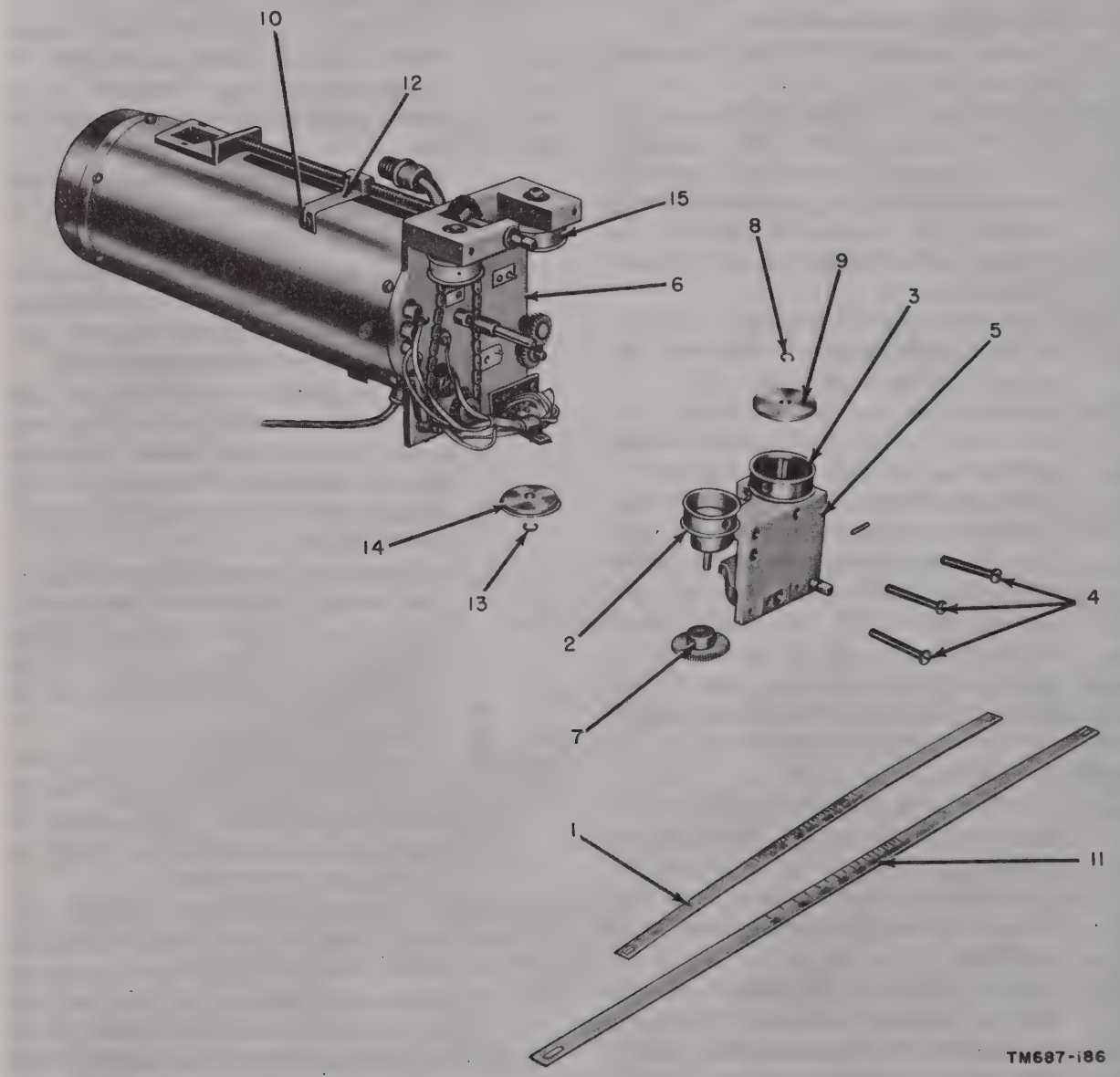

1	Grid tape	5	Small casting	9	Cover
2	Gear-driven drum	6	Large casting	10	Washer
3	Storage drum	7	Gear	11	Plate tape
4	Screw	8	Retaining ring	12	Screw follower

Figure 261. Transmitter C-band rf tuner, partially exploded view.

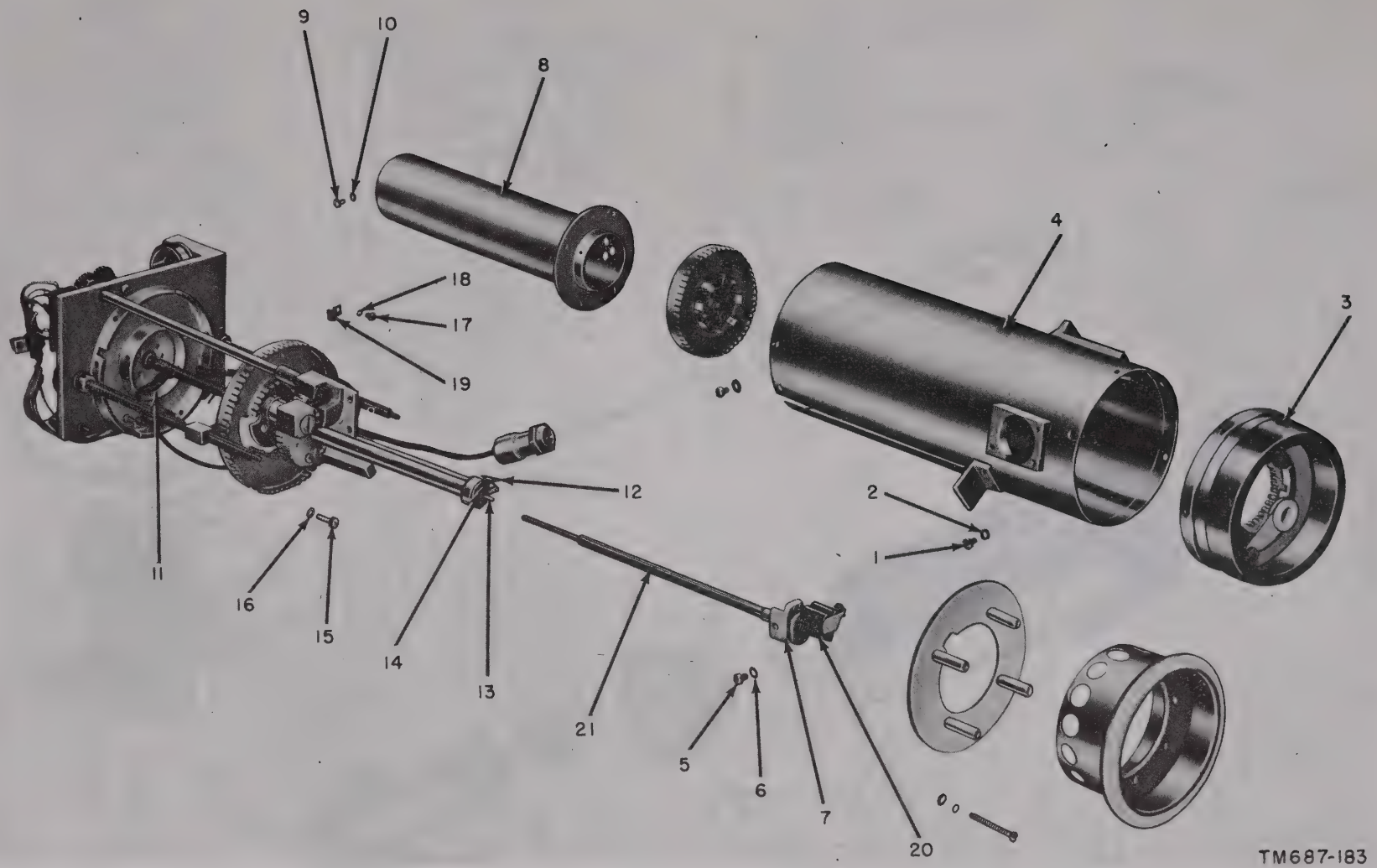

1	Screw	7	C11 assembly	12	Strap connection	17	Screw
2	Lockwasher	8	Inner cylinder	13	Capacitor	18	Lockwasher
3	Contact and capacitor assembly	9	Screw	14	Retaining ring	19	Cable clamp
4	Outer cylinder	10	Lockwasher	15	Screw	20	Capacitor
5	Screw	11	Casting	16	Lockwasher	21	Insulated shaft
6	Lockwasher						

Figure 262. Transmitter C-band rf tuner, multiplier, exploded view.

381345 O—56——26

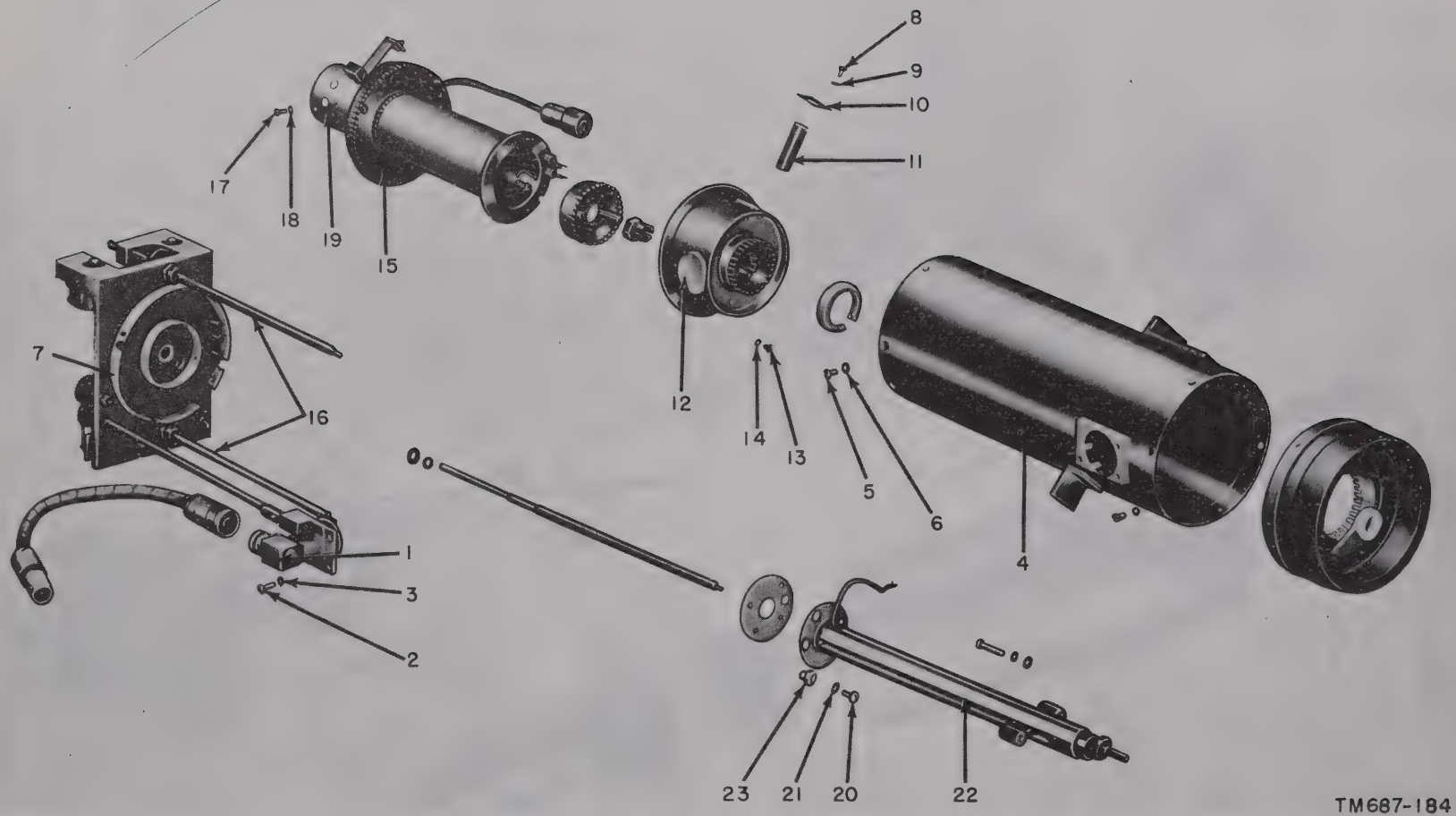

1	Output assembly	7	Front casting	13	Screw	19	Inner cylinder
2	Screw	8	Screw	14	Lockwasher	20	Screw
3	Lockwasher	9	Lockwasher	15	Shorting plunger assembly	21	Lockwasher
4	Outer cylinder	10	Plate	16	Threaded shaft	22	Tubing assembly
5	Screw	11	Air tube	17	Screw	23	Insulated bushing
6	Lockwasher	12	Contact and capacitor assembly	18	Lockwasher		

Figure 263. Transmitter C-band rf tuner, power amplifier, exploded view.

c. Remove the two screws that secure plug P121 to the chassis and disconnect the plug.

d. Support the upper chassis so that the hinged brace can be removed.

e. Remove the pivot stud at the lower end of the hinged brace.

f. Remove the six screws that secure the chassis hinge to the upper chassis. This frees the upper chassis for complete removal.

341. Replacing Transmitter and Power-Supply Interlock Switches

When replacing interlock switch S110 in Radio Transmitter T–302/TRC, or interlock switch S4 in Power Supply PP–685/TRC, the replacing switches must be mounted so that they operate and release under certain specific conditions. To accomplish this, mount the replacement switches to meet the following dimensional requirements:

a. Mount transmitter microswitch S110 so that its normally open contacts close when the perpendicular distance between the outermost point on its roller and the transmitter frame is .455 inch. When this distance is .505 inch, the switch contacts should open again.

Note. Most replacement microswitches for interlock switch S110 may have a copper stiffening spring mounted over the operating arm. Because of this copper spring, it may not be possible to mount a replacement microswitch on some transmitters. If this occurs, break off the copper spring. This will provide sufficient clearance to permit mounting the replacement microswitch.

b. Mount power-supply, plunger-type interlock switch S4 so that its normally open contacts close when the perpendicular distance between the outermost points on its plunger and the power-supply frame is .270 inch. When this distance is .340 inch, the switch contacts should open again.

Section III. FINAL TESTS AND ALINEMENT OF PLUG-IN ASSEMBLIES AND MINOR COMPONENTS

342. General

a. This section is intended as a guide in determining the quality of a repaired plug-in assembly or minor component prior to its being checked as a part of the transmitter or receiver. The minimum test requirements outlined in paragraphs 343 through 356 may be performed by maintenance personnel with adequate test equipment and the necessary skills.

b. Each test in this section is a detailed test of a single unit. The tests may be performed singly or in any order desired.

c. The general procedure in testing a plug-in assembly is to connect it to a receiver or transmitter that is known to be in good operating condition using the extension test cables that are provided with the equipment. Electrical Special Purpose Cable Assembly CX–2406/U contains a test-pin block, which provides readily accessible test points. Each pin in the test-pin block is connected to the correspondingly numbered terminal on the connectors.

d. If a final test indicates that a plug-in assembly requires adjustment or alignment, the procedure for performing the adjustment or alignment is outlined after the final test of the assembly.

e. Several of the minor components and plug-in assemblies, such as the rf tuners, are best tested by inserting them in a receiver or transmitter known to be good, and performing the final test of the entire receiver or transmitter (sect. IV and V). The plug-in assemblies and minor components that are not included in this section do not require individual final tests.

f. After a plug-in assembly or circuit has been prepared, and meets the requirements of a final test in this section, insert it in a transmitter or receiver and perform the final test on the entire transmitter or the entire receiver. The test procedure for the final test of the entire transmitter is outlined in section V of this chapter and the final test of the entire receiver is outlined in section IV of this chapter.

343. Test Equipment Required

The chart below lists the test equipment required for testing the minor components and plug-in assemblies for the AN/TRC–24. The chart lists also the manual for the test equipment.

Quantity	Test equipment	Manual
1	Signal Generator SG–71/FCC.	TM 11–5088.
1	Voltmeter ME–30A/U*	Applicable literature.
1	Electronic Multimeter TS–505/U.	TM 11–5511.
1	Multimeter TS–352/U	TM 11–5527.
1	Frequency Meter AN/URM–80.	Applicable literature.
1	Frequency Meter AN/URM–81.	Applicable literature.
1	Frequency Meter AN/URM–32.	Applicable literature.
1	Panoramic Indicator IP–173/U.	TM 11–5086.
1	Frequency Meter AN/URM–70.	Applicable literature.
1	Signal Generator TS–497/URR.	TM 11–5030.
1	Capacitor, 1-μf.	
1	Capacitor, 2-μf.	
1	Resistor, 75-ohm.	
1	Matching pad, 50- to 72-ohm, 6-db.	
1	Resistor, 1.57-ohm.	
2	Resistor, 5K $\pm$1%.	
1	Resistor, variable, 1.5K, 100-watt.	
1	Capacitor, .1-μf.	

*Electronic Multimeter ME–6/U may be used if Voltmeter ME–30A/U is not available. TM 11–5549 covers the ME–6/U.

344. Final Test of Transmitter Base-Band Amplifier Plug-In Assembly

a. General. The transmitter base-band amplifier plug-in assembly contains the base-band amplifier circuit, the l-kc oscillator circuit, and the MEASURE meter circuits. To test these circuits, perform each of the tests outlined in the *b* through *j* below in the order in which they are given. To adjust the frequency of the l-kc oscillator and the sensitivity of the meter, follow the instructions outlined in *e* and *g* below, respectively. Follow the instructions outlined in (1) through (3) below to prepare the assembly for testing.

(1) With the extension cable (CX–2406/U), connect the assembly to be tested to a transmitter known to be good.

(2) Do not close or tamper with the high-voltage interlock switches of the transmitter because the outputs of the high-voltage power supply are not necessary to test the assembly.

(3) Each test requires that power be applied to the transmitter from the power supply. Do not apply the power until test connections have been made. To change test connections during a test, shut off the power while making the change.

b. Checking Gain of Base-Band Amplifier Circuit. Follow the procedures outlined in (1) through (9) below to check the gain of the base-band amplifier circuit.

(1) Operate INPUT ADJ control to position 15.

(2) Rotate the MOD ADJ control R104 to its extreme clockwise position.

(3) Disconnect plug P102 from jack J104 and connect a 5,000–ohm terminating resistor between terminal 1 of plug P102 and ground.

(4) Connect another 5,000–ohm terminating resistor between terminal 2 of plug P102 and ground.

(5) Connect the audo oscillator (Signal Generator SG–71/FCC) to terminals 3 and 4 of the test-pin block of Electrical Special Purpose Cable Assembly CX–2406/U.

(6) Adjust the frequency of the audio oscillator to 14 kc, its output impedance to 135 ohms, and its output power to 0 dbm.

(7) Apply power to the transmitter.

(8) Connect Voltmeter ME–30A/U between terminal 1 of connector P102 and ground. The meter should read .137 $\pm$.050 volt.

(9) Connect the ME–30A/U between terminal 2 of connector P102 and ground. The meter should indicate within .03 volt of the reading obtained ((8) above).

(10) If the gain is too low, check voltages and resistances (fig. 195).

c. Checking Frequency Response of Base-Band Amplifier Circuit.

(1) Perform the procedures outlined in *b*(1) through (6) above. Set the MEASURE switch to the RF CHAN TUNE position.

(2) Connect Voltmeter ME–30A/U between terminal 1 of connector P102 and ground.

(3) Adjust the audio oscillator frequency to 1,000 cps, its output impedance to 135 ohms, and its output power and the setting of the MOD ADJ control

for an indication of .2 volt ac on the vtvm.

(4) Adjust the oscillator to each of the frequencies listed in the chart below, varying its power output at each frequency to maintain an indication of .2 volt ac on the vtvm. The normal power indications relative to the reference power at 1,000 cps at each frequency are shown below.

Frequency (cps)	Normal indications (db)
250	−0.1 +0.3 to −0.8.
1,000	Reference.
10,000	0.42 ±0.3.
30,000	2.10 ±0.3.
68,000	5.50 ±0.3.
90,000	−35 or less.

(5) If the frequency response is not correct, check voltages in the base-band amplifier (fig. 195).

d. Checking Frequency of l-Kc Oscillator. Perform the procedures in (1) through (5) below to check the frequency of the l-kc oscillator. If the frequency is not correct, follow the procedure in *e* below to adjust the frequency.

(1) Operate the transmitter MEASURE switch to the 1KC ADJ position.

(2) Connect the audio oscillator to terminals 5 and 7 of the test-pin block of Electrical Special Purpose Cable Assembly CX–2406/U.

(3) Adjust the audio oscillator frequency to 1,000 cps, its impedance to 600 ohms, and its output power to +14 dbm. Adjust the 1KC ADJ control to its maximum clockwise position. Note that the needle on the transmitter MEASURE meter moves back and forth in response to the beat frequency of the signal generator and the l-kc oscillator. If the movement of the needle of the MEASURE meter is slow, the frequencies of the audio oscillator and the l-kc oscillator are close to each other. If the MEASURE meter needle moves quickly, the two frequencies are separated by a greater frequency difference.

(4) Slowly vary the frequency of the audio oscillator above and below 1,000 cps.

(5) Note the frequency of the audio oscillator which causes the slowest movement of the MEASURE meter needle (zero beat). The audio oscillator frequency should be 1,000 ±25 cps. If this value is not noted, the frequency of the l-kc oscillator is incorrect and should be adjusted (*e* below) before proceeding.

e. Adjusting Frequency of l-Kc Oscillator. If the frequency of the l-kc oscillator is determined to be incorrect (*d*(5) above), adjust the frequency by strapping capacitors C117 and C120 according to the procedure outlined in (1) through (5) below. Strapping is performed by either connecting a capacitor into the circuit with a strapping wire or disconnecting a capacitor from the circuit by removing a strapping wire. Use a lead with a clip at each end as a strapping wire for temporary testing purposes. Strapping a capacitor into the circuit will lower the frequency of the oscillator and unstrapping a capacitor will raise the frequency.

(1) Determine if the frequency of the oscillator is above 1 kc or below 1 kc by following the procedure in *d*(5) above. If the frequency is determined to be below 1 kc, follow the procedure outlined in (2) below. If the frequency is determined to be above 1 kc, follow the procedure outlined in (3) below.

(2) Raise the frequency of the l-kc oscillator by removing the strapping wires that connect either capacitor C117 or C120 to the circuit. If the removal of each capacitor in turn does not raise the frequency to 1kc, remove the strapping wires from both capacitors.

(3) Lower the frequency of the l-kc oscillator by connecting capacitor C117 or C120 to the circuit with temporary strapping wires. If the connection of each capacitor in turn does not lower the frequency to 1 kc, strap both capacitors into the circuit.

(4) If it is possible to adjust the frequency to 1 kc by following the procedures in (2) and (3) above, solder

permanent strapping wires in place of the temporary clip leads. If it is not possible to adjust the frequency to 1 kc by strapping, trouble shoot the 1-kc oscillator circuit.

f. Checking Sensitivity of Meter Circuit. Perform the procedures in (1) through (3) below to check the sensitivity of the meter circuit. If the indications are not correct, follow the procedure in *g* below to adjust the sensitivity.

(1) Connect an ac voltmeter (Electronic Multimeter TS–505/U) to terminals 7 and 5 of the test-pin block of Electrical Special Purpose Cable Assembly CX–2406/U.

(2) Operate the MEASURE switch of the transmitter to the 1KC ADJ position.

(3) Rotate 1KC ADJ control, R141, to the position at which the voltmeter reads 2.45 ±.30 volt. The measure meter should read 35 ±1 microamperes if the sensitivity is properly adjusted.

g. Adjusting the Sensitivity of Meter Circuit. If the check of sensitivity of the meter circuit (*f* above) indicates that the meter is improperly adjusted, follow the procedures outlined in (1) through (9) below to adjust the sensitivity by strapping resistors R318 and R319. Strapping the resistors decreases or increases the current that flows through the MEASURE meter by adding or reducing the resistance in the circuit. To reduce the resistance of the circuit, a resistor is shorted by connecting a strapping wire across it. To increase resistance, a strapping wire is removed.

(1) Unsolder any strapping wires that are connected across resistor R318 or R319.

(2) Check the sensitivity of the meter circuit (*f* above).

(3) Using a temporary strapping wire, such as a clip lead, short out resistor R319.

(4) Check the sensitivity of the meter circuit (*f* above).

(5) Remove the strapping wire from resistor R319 and use it to short out resistor R318.

(6) Check the sensitivity of the meter circuit (*f* above).

(7) Without removing the strapping wire from resistor R318, connect another temporary strapping wire across resistor R319.

(8) Check the sensitivity of the meter circuit (*f* above).

(9) If one of the strapping arrangements above produces the correct indication, replace the temporary strapping wires used in that arrangement with permanent, soldered connections. If none of the strapping arrangements produces the correct indication, trouble-shoot the circuit.

h. Checking Meter Amplifier Circuit. Follow the procedure outlined in (1) through (4) below to check the meter amplifier circuit of the transmitter.

(1) Connect Electronic Multimeter TS–505/U to terminals 5 and 7 on the test-pin block of Electrical Special Purpose Cable Assembly CX–2406/U.

(2) Adjust the 1KC ADJ control to obtain an output of 2.45 volts on the TS–505/U.

(3) Set the transmitter MEASURE switch to the MTR CAL position.

(4) Adjust the MTR CAL control for a normal indication of 0 db on the MEASURE meter.

i. Checking Meter Circuit Response to 68-Kc Frequency. Follow the procedure outlined in (1) through (5) below to check to see that the meter responds correctly to a 68-kc input signal applied through selective filter FL102.

(1) Set the MEASURE switch of the transmitter to the MOD 68KC IN position.

(2) Connect Signal Generator SG–71/FCC between coaxial connector J103 and ground.

(3) Connect Voltmeter ME–30A/U across the output of the audio oscillator.

(4) Adjust the audio oscillator frequency to 68 kc, and its output to .145 volt as indicated on the ME–30A/U. The setting of the oscillator output impedance will not affect this test.

(5) Adjust capacitor C111 for a maximum indication on the MEASURE meter. If the circuit is operating normally, the MEASURE meter will read 35 ±3 microamperes.

(6) If the meter reading is not correct, check 68-kc filter FL102 (par. 322) and check the continuity through the switching circuit. Do not disconnect the test instruments until the test outlined in *j* below is completed.

j. Checking Meter Circuit Response to 1-Kc Frequency. Follow the procedure outlined in (1) through (3) below to check to see that the meter circuit responds correctly to a 1-kc input signal applied through selective filter FL103.

(1) Turn the MEASURE switch to the MOD 1KC IN position.

(2) Check to see that Signal Generator SG–71/FCC is connected between jack J103 and ground. Adjust the audio oscillator frequency to 1,000 cps and its output to .436 volt as indicated on the ME–30A/U. The setting of the oscillator output impedance will not affect this test.

(3) Read the transmitter MEASURE meter for a normal indication of 35 ±3 microamperes.

(4) If the meter reading is not correct, check 1-kc filter FL103 (par. 322) and check the continuity through the switching circuit.

345. Final Test of Crystal Oscillator Plug-In Assembly

a. General. The final test of the crystal oscillator plug-in assembly consists of checking the crystal oscillator, the .5-mc pulse generator, and the 2.5-mc pulse generator. The procedures for making these tests are given in *b* through *g* below. To perform final tests on this plug-in assembly, use a Radio Set AN/TRC–24 which is known to be operating properly. Follow the procedures in the order given.

Caution: Since dangerous voltages are exposed when the transmitter is operating outside of its transit case, be sure that the power is turned off while making connections.

b. Preliminary Procedure.

(1) Set the power-supply 115V AC switch to the OFF position.

(2) Remove the crystal oscillator plug-in assembly from the transmitter (par. 158).

(3) Connect one end of Electrical Special Purpose Cable Assembly CX–2406/U to connector J123 of the transmitter.

(4) Connect the other end of the CX–2406/U to connector P113 on the crystal oscillator plug-in assembly to be tested.

(5) Connect the radio set to a source of ac power and operate the power supply 115V AC and 150V DC switches to the ON positions.

c. Alinement.

(1) Connect Electronic Multimeter TS–505/U between test jack J122 and ground to measure the negative dc voltage at the test jack.

(2) Turn the XTAL SEL switch to the DECADE CHANS position and adjust the tuning slug of inductor L111, the 2.5MC CONTROL (fig. 210), for a peak reading on the TS–505/U.

(3) Turn the XTAL SEL switch to the UNIT CHANS position and adjust the tuning slug of inductor L112, the 1MC CONTROL, for a peak reading on the TS–505/U.

(4) Hold the XTAL SEL switch in the DISCR CENTER position and adjust the tuning slug of inductor L114, the 10.125MC CONTROL, for a peak reading on the TS–505/U. This completes the alinement of the crystal oscillator circuit.

(5) Release the XTAL SEL switch. Remove the crystal oscillator tube, V114, from its socket. This will permit adjusting the free-running frequency of the .5-mc pulse generator. Disconnect the TS–505/U.

(6) Position Frequency Meter AN/URM–32 near the crystal oscillator plug-in assembly. Extend a lead from the input of the frequency meter to a position as close as possible to the output of tube V113.

(7) Operate the XTAL SEL switch to the UNIT CHANS position.

(8) An indication between 403.2 and 436.8 kc should be obtained on the frequency meter. If the indication is not within these limits, adjust capacitor C206 (fig. 211) for an indication at 420 kc.

(9) Replace tube V114.

d. Checking Crystal Oscillator.

(1) Position Frequency Meter AN/URM–80 near the transmitter.
(2) Extend a lead from the input of the frequency meter to a position as close as possible to the output of tube V116.
(3) Operate the XTAL SEL switch to the DECADE CHANS position.
(4) Operate the PULSED OSC switch to the EVEN CHANNELS position.
(5) Adjust the PULSED OSC TUNE control for rf channel 20.
(6) Using the frequency meter, check for an indication at approximately 65 mc and at approximately 67.5 mc.
(7) The difference between the two indications obtained in (6) above should be 2.5 mc ±125 cps.
(8) Set the XTAL SEL switch to the UNIT CHANS position.
(9) Using the frequency meter, check for indications at approximately 65 and 65.5 mc.
(10) The difference between the two indications obtained in (9) above should be .5 mc ±25 cps.
(11) Extend the lead from the input of the frequency meter to a position as close as possible to the output of tube V114.
(12) Hold the XTAL SEL switch in the DISCR CENTER position.
(13) Check for an indication on the frequency meter at 10.125 ±506 cps. This is a normal indication.
(14) Disconnect cable W109 from jack J126 of the plug-in assembly under test.
(15) Connect a 51-ohm resistor in parallel with Electronic Multimeter TS–505/U between coaxial jack J126 and chassis ground.
(16) Hold the XTAL SEL switch in the DISCR CENTER position and check to see that the output voltage at jack J126 is .13 ±.057 volt ac. This is a normal indication.
(17) Disconnect the TS–505/U from jack J126 and connect it between pin 1 of tube V115 and chassis ground.
(18) Set the XTAL SEL switch to the DECADE CHANS position.
(19) Check to see that the indication on the TS–505/U is 14 ±4.2 volts root mean square ac. This is a normal indication.

Note. An alternate method of checking this requirement is to measure the negative dc voltage at test jack J124. This voltage should be between —.20 and —.49 volt dc.

(20) If one of the frequency indications was wrong, replace the crystal that was the frequency determining element when the incorrect indication was obtained. If the output voltage was below normal, check the crystal oscillator voltage and resistance measurements (fig. 193).

e. Checking .5-Mc Pulse Generator.

(1) Repeat the procedure in *d*(8), (9), and (10) above.
(2) Reconnect cable W109 to jack J126.
(3) Connect the TS–505/U between pin 8 of tube V116 of the pulsed oscillator plug-in assembly and chassis ground.
(4) Set the XTAL SEL switch to the UNIT CHANS position.
(5) Check to see that the TS–505/U indicates 42.4 ±12.7 volts ac. This is a normal reading.

Note. An alternate method of checking this requirement is to measure the negative dc voltage at test jack J129 of the pulsed oscillator plug-in assembly. This voltage should be between —1.32 and —2.44 volts dc.

(6) Position Panoramic Indicator IP–173/U, Signal Generator TS–497/URR, and Frequency Meter AN/URM–70 near the transmitter.
(7) Connect the TS–497/URR to one input connector of the panoramic indicator. Connect the AN/URM–70 to the other input connector of the panoramic indicator through an 8-micromicrofarad capacitor.
(8) Adjust the output to .01 volt at 55 mc.
(9) Adjust the output of the TS–497/URR and the controls of the panoramic indicator for an indication of —10 to 0 db at 50 mc on the panoramic indicator.
(10) Disconnect the AN/URM–70 from the panoramic indicator.
(11) Connect pin 1 of tube V117 of the pulsed oscillator assembly through an 8-$\mu\mu$f capacitor to the input jack of the panoramic indicator.

(12) Vary the PULSED OSC TUNE control from its extreme counterclockwise position to its extreme clockwise position. Correspondingly vary the frequency of the TS–497/URR to obtain a centered deflection on the screen of the panoramic indicator as the PULSED OSC TUNE control is varied.

(13) Check to see that the indication on the panoramic indicator does not go below 0 db as the PULSED OSC TUNE control is varied. This is a normal indication.

(14) If the requirements specified (13 above) are not met, check tubes V113 and V116 and replace if faulty. Check the voltage and resistance measurements in the .5-mc pulse generator (fig. 193), cathode follower, and pulsed oscillator (fig. 192).

f. Checking 2.5-M-c Generator.

(1) Repeat the procedure given in *d*(1) through (7) above.

(2) Check to see that the procedure in *e*(2) and (3) above have been performed.

(3) Check to see that the TS–505/U indicates 15 ±4.5 volts ac.

Note. An alternate method of checking this requirement is to measure the negative dc voltage at test jack J130 of the pulsed oscillator plug-in assembly. This voltage should be between —.54 and —1.0 volt dc.

(4) Repeat the procedure in *e*(6) through (13) above with the XTAL SEL switch in the DECADE CHANS position, except that in the step in (8) above the output of the AN/URM–70 should be set to 3,000 microvolts at 55 mc.

(5) If the requirements are not met, check tubes V115 and V116 and replace if faulty. Check the voltage and resistance measurements in the 2.5-mc pulse generator (fig. 193), cathode follower, and pulsed oscillator (fig. 192).

g. Final Procedure.

(1) Place the power supply 150V DC and 115V AC switches in their OFF positions.

(2) Disconnect the CX–2406/U.

(3) Replace and connect in the transmitter the crystal oscillator plug-in assembly removed as instructed in *b*(2) above.

(4) Disconnect the TS–505/U, the 8-$\mu\mu$f capacitor, and the panoramic indicator.

(5) Secure the transmitter in its transit case.

346. Final Test of 60-Cps Modulator Plug-In Assembly

Perform the final test of the 60-cps modulator plug-in assembly to determine that it is supplying the proper voltages to the afc motor.

a. Pretest Procedure.

(1) Remove the 60-cps modulator plug-in assembly from a transmitter that is known to be operating properly (par. 159).

(2) Connect the 60-cps modulator assembly to be tested to connector P120 with the CX–2406/U.

(3) Place the power-supply 115V AC and 150V DC switches in the ON positions.

(4) Tune the PULSED OSC TUNE and RF CHANNEL TUNE controls to channel 124.

b. Test Procedure.

(1) Place the AFC switch in the OFF position.

(2) Connect a vtvm (Voltmeter ME–30A/U) to terminals 3 and 4 of transformer T105.

(3) Adjust control R302 for a minimum indication on the vtvm. The vtvm should read .01 volt ac or less after the adjustment.

(4) Connect Electronic Multimeter TS–505/U as a dc voltmeter to terminals 0 and 7 of the test-pin block of the CX–2406/U.

(5) Set the AFC switch to the ON position.

(6) Adjust the AFC front-panel control for an indication of 1.5 volts dc on the TS–505/U. Hold the AFC control in this position during the remainder of this test. The ME–30A/U should read .5 volt ac.

(7) Connect the ME–30A/U between pin 3 of tube V125 and ground. It should read .35 volt ac.

(8) Connect the ME–30A/U between AFC BALANCE jack 138 and ground. It should read 10 volts ac.

347. Final Test of Pulsed Oscillator Plug-In Assembly

a. General. The final test of the pulsed oscillator plug-in assembly consists of checking the cathode follower, the pulsed oscillator, the high-pass filter, and the afc mixer. The procedures for making these tests are given in *b* through *g* below. To perform the final test on this plug-in assembly, use a Radio Set AN/TRC–24 which is known to be operating properly. Follow the procedures in the order given.

Caution: Since dangerous voltages are exposed when the transmitter is operating outside of its transit case, be sure that the power is turned off while making connections.

b. Preliminary Procedure.

(1) Place the power supply 115V AC switch in the OFF position.

(2) Remove the pulsed oscillator plug-in assembly from the transmitter that is known to be operating properly (par. 160).

(3) Connect one end of the CX–2406/U to connector J128 of the transmitter.

(4) Connect the other end of the CX–2406/U to connector P116 on the plug-in assembly to be tested.

(5) Connect spade lug E137 to terminal board TB111; use as short a lead of insulated wire as possible. Check to see that connector P117 is connected to receptacle J131.

(6) Connect the radio set to a source of ac power and place the power-supply 115V AC and 150V DC switches in the ON positions.

c. Alinement.

(1) Adjust the RF CHANNEL TUNE and the PULSED OSC TUNE controls to channel 1. Operate the transmitter MEASURE switch to the RF CHAN TUNE position. Adjust capacitor C225 (fig. 213) for a maximum reading on the transmitter MEASURE meter.

(2) Adjust the RF CHANNEL TUNE control to channel 250. Turn the PULSED OSC TUNE control to the high end of its range and note the setting that produces the maximum peak on the transmitter MEASURE meter. This maximum peak should occur when the PULSED OSC TUNE control is set between channels 249 and 251.

Note. An alternate method of checking this requirement is to measure the negative dc voltage at jack J130. This voltage should be between —2.39 and —4.43 volts dc.

(3) If the requirement specified in (2) above is not met, turn off the power and adjust inductor L119 (fig. 213). Adjust this inductor by squeezing or opening the coil, thereby changing its diameter.

(4) Adjust the PULSED OSC TUNE control to channel 250. If the setting noted in (2) above was higher than channel 251, squeeze the coil. If the setting was lower than channel 249, open the coil. After each adjustment, turn the power on and check the adjustment by repeating the procedure described in (2) above. When inductor L119 is adjusted correctly, the pulsed oscillator circuit is aligned.

(5) To aline the mixer circuit, hold the XTAL SEL switch in the DISCR CENTER position and adjust inductor L125 (fig. 212) for a peak reading on the transmitter MEASURE meter.

Note. This is equivalent to a negative dc voltage between —.54 and —1.0 volt dc at jack J130.

d. Checking Cathode Follower.

(1) Turn the XTAL SEL switch to the UNIT CHANS position.

(2) Connect Electronic Multimeter TS–505/U as an ac voltmeter through a .1-μf capacitor between pin 8 of tube V116A and chassis ground.

(3) Check to see that the indication on the TS–505/U is 42.4 $\pm$12.7 volts ac.

(4) Turn the XTAL SEL switch to the DECADE CHANS position.

(5) Check to see that the indication on the TS–505/U is 15 $\pm$4.5 volts ac.

e. Checking Pulsed Oscillator.

(1) Position Panoramic Indicator IP–173/U and Signal Generator TS–497/

URR near the transmitter.

(2) Connect the TS–497/URR to one input connector of the panoramic indicator. Connect pin 4 of tube V116 through a 2–$\mu\mu$f capacitor to the other input connector of the panoramic indicator.

(3) Turn the PULSED OSC switch to the EVEN CHANNELS position.

(4) Adjust the PULSED OSC TUNE control to rf channel 10.

(5) Adjust the controls of the TS–497/URR and of the panoramic indicator to obtain a centered deflection at —10 to 0 db on the panoramic indicator.

(6) Rotate the PULSED OSC TUNE control from its extreme counterclockwise position to its extreme clockwise position. Correspondingly vary the frequency output of the TS–497/URR to produce centered deflections on the panoramic indicator.

(7) Check to see that indications, separated by 2.5 mc and having a center deflection of not less than 0 db, are present as the PULSED OSC TUNE control is operated throughout its range. Image frequencies produced by the mixing of the pulsed oscillator and TS–497/URR frequencies should be very nearly coincident with the desired pip on the panoramic indicator. No other indications should be present on the panoramic indicator.

(8) Turn the XTAL SEL switch to the UNIT CHANS position.

(9) Adjust the controls of the TS–497/URR and of the panoramic indicator to obtain 3 pips. Each pip should be spaced .5 mc from the adjacent ones, and the center pip should have a deflection of not less than 0 db.

(10) Repeat the procedure in (6) above. Check to see that indications, separated by .5 mc and having a center pip deflection of not less than 0 db, are present as the PULSED OSC TUNE control is operated throughout its range.

(11) Turn the XTAL SEL switch to the DECADE CHANS position.

(12) Adjust the PULSED OSC TUNE control for rf channel 40.

(13) Adjust the TS–497/URR frequency to 75 mc and its voltage output to obtain a +15 db indication on the panoramic indicator.

(14) Adjust the TS–497/URR frequency to 95 mc. Any pips that appear on the panoramic indicator should be less than 0 db.

(15) Position Frequency Meter AN/URM–80 near the transmitter.

(16) Extend a lead from the frequency meter input to a point as close as possible to the output of tube V116B.

(17) Adjust the PULSED OSC TUNE control to obtain a maximum indication on the frequency meter at 70 mc.

(18) Check to see that the PULSED OSC dial indicates rf channel 40 ±3 rf channels.

(19) Disconnect the lead from the AN/URM–80.

f. Checking High-Pass Filter.

(1) Adjust the TS–497/URR frequency to 75 mc, and its output voltage for an indication of 0 db on the panoramic indicator.

(2) Disconnect the 2–$\mu\mu$f capacitor from pin 4 of tube V116.

(3) Connect pin 1 of tube V117 through a 2-micromicrofarad capacitor to the input of the panoramic indicator. A centered pip should appear on the panoramic indicator.

(4) Adjust the TS–497/URR output voltage for a pip of ±20 db on the panoramic indicator.

(5) Adjust the TS–497/URR frequency to 15 mc. The indication on the panoramic indicator should be —20 db. This is a normal indication.

(6) Readjust the TS–497/URR frequency to 75 mc for a centered pip of ±20 db on the panoramic indicator.

(7) Disconnect the 2–$\mu\mu$f capacitor from pin 1 of tube V117.

(8) Apply the output of Frequency Meter AN/URM–70 to the input of the panoramic indicator through the 2–$\mu\mu$f capacitor.

(9) Adjust the output of the AN/URM–70 to obtain a ±20-db pip on the panoramic indicator.

(10) Check to see that the output of the

AN/URM–70 is at least .01 volt.

g. Checking Afc Mixer.

(1) Connect a 50-ohm and a 25-ohm resistor between connector J132 and ground.

(2) Disconnect the AN/URM–70 from the panoramic indicator. Connect the panoramic indicator across the 50-ohm resistor of the 75-ohm combination.

(3) Turn the XTAL SEL switch to the UNIT CHANS position.

(4) Turn the PULSED OSC switch to the ODD CHANNELS position, and adjust the PULSED OSC TUNE and RF CHANNEL TUNE controls to rf channel 1.

(5) Adjust the TS–497/URR frequency to 15.125 mc and its output to obtain a centered pip of 0 db on the panoramic indicator. The centered pip is caused by the 10.125-mc output of the afc mixer. Other pips will probably be seen on the panoramic indicator. These are described in (*a*), (*b*), and (*c*) below.

(*a*) The pulsed-oscillator output, when the XTAL SEL switch is in the UNIT CHANS position, contains frequencies spaced .5 mc. When operating on rf channel 1, the two frequencies (39.5 and 40.5 mc) adjacent to the desired frequency (40.0 mc) produce two mixer outputs (10.625 and 9.625 mc) which will be seen on the panoramic indicator. These appear on either side of the center pip and are separated from it by .5 mc.

(b) The fourth harmonic of 2.5 mc (XTAL SEL switch in DECADE CHANS position) is 10.0 mc; this frequency feeds through the afc mixer and appears on the panoramic indicator .125 mc to one side of the centered pip. Similarly when the XTAL SEL switch is in the UNIT CHANS position, the 20th and 21st harmonics of .5 mc (10.0 and 10.5 mc) produce pips on the panoramic indicator. One pip will appear .125 mc to one side of the centered pip and the other pip will appear .375 mc away from, and on the other side of, the centered pip. These are spurious responses and should be at least 15 db below the centered pip.

(*c*) When operating on rf channel 1, the XTAL SEL switch in the UNIT CHANS position, the pulsed oscillator produces reduced outputs at 60.0 and 60.5 mc. These will beat in the afc mixer with the 50.125-mc base rf oscillator output and cause outputs at 9.875 and 10.375 mc. These outputs will cause pips to appear .25 mc at either side of the centered pip. These are spurious responses and should be at least 15 db below the centered pip. Note that when the XTAL SEL switch is in the DECADE CHANS position, the pulsed oscillator does not produce an output at 60.5 mc and hence only one of the two spurious responses described here can be produced.

(6) Repeat the procedure outlined in (3), (4), and (5) above for each condition specified in the chart below.

XTAL SEL switch	RF CHANNEL TUNE and PULSED OSC TUNE controls
DECADE CHANS	1 (ODD CHANNELS).
UNIT CHANS	161 (ODD CHANNELS).
DECADE CHANS	161 (ODD CHANNELS).
UNIT CHANS	250 (EVEN CHANNELS).
DECADE CHANS	250 (EVEN CHANNELS).

(7) Disconnect the panoramic indicator and the 75-ohm resistor combination.

(8) Connect the TS–497/URR through the 50- to 72-ohm matching pad to connector P118 of the afc if. amplifier plug-in assembly. Connect the TS–505/U between test jack J134 and ground.

(9) Adjust the TS–497/URR frequency to 10.125 mc and its output to 600 microvolts. Note the indication on the TS–505/U.

(10) Disconnect the TS–497/URR and connect cable assembly CG–789A/U between connector J132 of the pulsed oscillator plug-in assembly and connector P118.

(11) The indication on the TS–505/U should be equal to or greater than that noted in (9) above.

h. Final Procedure.

(1) Place the power-supply 115V AC switch in the OFF position.

(2) Disconnect Electrical Special Purpose Cable Assembly CX–2406/U.

(3) Replace and connect in the transmitter the pulsed oscillator plug-in assembly removed as instructed in *b*(2) above.

(4) Disconnect the 75-ohm terminating resistor from jack J132 of the plug-in assembly tested.

(5) Secure the transmitter in its transit case.

348. Final Test of Afc If. Amplifier Plug-In Assembly

a. General. The final test of the afc if. amplifier plug-in assembly consists of testing the three-stage if. amplifier for proper gain and bandwidth, of alining the if. amplifier if necessary, of testing the afc limiter for proper limiting action, and of testing the afc discriminator for the proper polarity and amplitude output at frequencies other than the if. frequency.

b. Test Circuit. To set up the test circuit required for the final test of the afc if. amplifier, follow the procedure outlined in (1) through (8) below.

(1) Remove the radio transmitter of a radio set known to be good from the transmitter transit case (par. 156). Remove the afc if. amplifier plug-in assembly from the radio transmitter (par. 161).

(2) Connect cable assembly CX–2406/U between connector P119 of the afc if. amplifier under test and connector J135 of the radio transmitter.

(3) Connect cable assembly CG–789A/U between coaxial connector P103 of the afc if. amplifier under test and connector J103 of the radio transmitter.

(4) Connect Signal Generator TS–497/URR through the 50- to 72-ohm matching pad to connector P118 on the afc if. amplifier under test.

(5) Connect the radio transmitter for normal operation. The high voltage will not be present due to the open interlock circuit and is not required for these tests. Do not interconnect the receiver and transmitter.

(6) Set the AFC switch of the radio transmitter to the OFF position.

(7) Rotate the MEASURE switch to the 1KC IN position to disconnect the transmitter MEASURE meter circuit from the afc if. amplifier assembly.

(8) Connect test jack J133 of the afc if. amplifier to ground. This removes avc voltage from the afc if. amplifier.

c. Test for If. Amplifier Gain and Bandwidth.

(1) Connect Electronic Multimeter TS–505/U with the negative terminal to test jack J134 and the positive terminal to ground.

(2) Using the AN/URM–80, adjust the frequency of Signal Generator TS–497/URR to 10.125 mc. Adjust the output of the signal generator until the TS–505/U reads 5 volts. If the gain of the if. amplifier is within acceptable limits, the required output of the signal generator will be between 260 and 2,600 microvolts.

(3) Connect a 20,000-ohm potentiometer between terminals K and D of the RECEIVER jack on the front panel of the transmitter.

(4) Unground test jack J133 and connect the center terminal of the 20,000-ohm potentiometer to this test jack. Adjust the voltage at the center terminal of the potentiometer to —5 volts with respect to ground.

(5) Adjust the output of the signal generator to produce a reading of 5 volts at test jack J134 with an input frequency of 10.125 mc.

(6) Increase the frequency of the signal generator until the reading on the TS–505/U has decreased to 3.5 volts. The signal generator frequency as checked with the AN/URM–80 should not be less than 10.125 mc.

(7) Decrease the frequency of the signal generator below 10.125 mc until the reading on the TS–505/U decreases to 3.5 volts. The signal generator frequency as checked with the AN/

URM–80 should not be higher than 10.000 mc.

(8) Decrease the frequency of the signal generator until the reading on the TS–505/U has decreased to .5 volt. The signal generator frequency as checked with the AN/URM–80 should not be lower than 9.800 mc.

(9) Increase the frequency of the signal generator above 10.125 mc until the reading on the TS–505/U decreases to .5 volt. The signal generator frequency as checked with the AN/URM–80 should not be higher than 10.450 mc.

(10) Using the AN/URM–80, retune the signal generator to 10.125 mc.

(11) Disconnect the electronic multimeter from test jack J134. Do not disconnect the 20K potentiometer.

(12) Connect a 5,000-ohm resistor between terminals 3 and 1 of plug P119. (These terminals are the output of the tuning indicator circuit.) For convenience, make this connection at the test-pin block on the test cable.

(13) Connect the electronic multimeter across the 5,000-ohm resistor. Record the voltage.

(14) Using the AN/URM–80, readjust the frequency of the signal generator both above and below 10.125 mc until the voltage, as read on the electronic multimeter, is .707 of the voltage recorded in (13) above. The difference between the two frequencies should be between 110 and 190 kc.

(15) Using the AN/URM–80, readjust the frequency of the signal generator both above and below 10.125 mc to obtain the two frequencies for which the voltage, as read on the electronic multimeter, is one-tenth of the value recorded in (13) above. The difference between the two frequencies should be between 420 and 640 kc.

(16) If the test limits specified in (2) through (15) above are not met, it will be necessary to aline the if. amplifier and the tuning indicator circuit. To do this, follow the procedure outlined in (*a*) through (*c*) below.

(*a*) Using the AN/URM–80, adjust the signal generator frequency to 10.125 mc.

(*b*) With the alinement tool, which is stored behind the top of the receiver front panel, adjust the movable core of each of inductors L126, L127, L129, L130, and L131 (fig. 206) for a maximum indication on the electronic multimeter.

(*c*) Reconnect the test circuit as specified in *b* above and repeat the procedure outlined in (1) through (15) above to determine whether the alined if. amplifier and tuning indicator circuit meet the gain and bandwidth requirements.

(17) Disconnect the 5,000-ohm resistor from the test-pin block.

d. Limiter Test. To test the two-stage limiter, aline the limiter circuits ((1) through (3) below) and then follow the procedure outlined in (4) and (5) below.

(1) Disconnect the 20K potentiometer from the RECEIVER jack and from test jack J133.

(2) Connect the TS–505/U between test jack J136 (2D LIM TEST) and ground. With the TS–497/URR at connector P118 applying a frequency of 10.125 mc as checked with the AN/URM–80, adjust inductor L132 (fig. 206) for a peak reading on the TS–505/U.

(3) Turn the MEASURE switch to the DISCR RF DRIVE position. Adjust inductor L133 for a peak reading on the MEASURE meter.

(4) Adjust inductor L134 for a zero (midscale) reading on the FREQ DRIFT meter.

(5) Set the DISCR RF DRIVE potentiometer to obtain a maximum indication on the MEASURE meter. Connect the TS–505/U between test jack J134 and ground. Vary the output voltage of the TS–497/URR so that the voltmeter indication increases from —1.3 to —5 volts dc.

(6) The MEASURE meter should indicate at least 38 microamperes. This current should remain constant within 5 microamperes for the variation in voltage described in (5) above.

e. Afc Discriminator Test. To test the discriminator, follow the procedure outlined in (1) through (9) below.

(1) Adjust the output voltage of the TS–497/URR to 5,000 microvolts.

(2) Adjust the TS–497/URR frequency to 10.125 mc.

(3) Remove the bottom cover of the if. amplifier and connect the TS–505/U as a dc voltmeter with the negative terminal to terminal 6 of network Z107 and the positive terminal to ground (terminal 2 of network Z107).

(4) Adjust the Discr RF DRIVE control to obtain an indication on the TS–505/U of 41.5 volts dc.

(5) Turn the MEASURE switch to the DISCR RF DRIVE position. Adjust the DISCR RF DRIVE potentiometer to make the MEASURE meter read 35 microamperes.

(6) Disconnect the TS–505/U from terminal 6 of network Z107, and connect the TS–505/U to terminal 10 of connector P119.

(7) Adjust the TS–497/URR to each of the frequencies listed in the chart below. The vtvm indication for each frequency should be within the limits specified in the chart.

TS–497/URR frequency (mc)	Output (volts dc)	
10.000	−18.75	±3.75
10.065	−9.0	±1.8
10.185	+9.0	±1.8
10.250	+18.75	±3.75

(8) Check to see that the PULSED OSC switch is in the EVEN CHANNELS position. Using the AN/URM–80, adjust the TS–497/URR frequency to 10.125 mc. The FREQ DRIFT meter should deflect to the left. Note the reading.

(9) Decrease the TS–497/URR frequency to 10.00 mc; the FREQ DRIFT meter should deflect to the right. The reading should be equal within 5 μa (but opposite in polarity) to the reading in (8) above. If it is not, readjust inductor L133 and repeat the procedure outlined in (8) above and this step until the requirement is met.

f. Deemphasis Network Test. To test the deemphasis circuit of the afc discriminator, follow the procedure outlined in (1) through (6) below.

(1) Remove tube V123.

(2) Connect Signal Generator SG–71/FCC between terminal 1 of socket XV123 and ground.

(3) Using the ac probe, connect Electronic Multimeter TS–505/U across coaxial connector P103.

(4) Adjust potentiometer R293 (DISCR OUT ADJ) to its maximum clockwise position.

(5) Adjust the SG–71/FCC frequency to 1,000 cps and its output voltage to 2 volts. The TS–505/U should indicate 1 ±.2 volt.

(6) Adjust the SG–71/FCC frequency to 68 kc without changing its output voltage. The TS–505/U should read within .03 volt of half the voltage obtained in (5) above.

g. Calibration of DISCR OUT ADJ Potentiometer. To calibrate the DISC OUT ADJ potentiometer, follow the procedure outlined in (1) through (7) below.

(1) Replace tube V123.

(2) Connect cable assembly CG–789A/U between connector P118 of the afc if. amplifier plug-in assembly and connector J132 of the pulsed oscillator plug-in assembly. Disconnect cable W103 from connector J131 and connect Signal Generator AN/URM–70 to connector J131.

(3) Adjust the AN/URM–70 for an output frequency of 50.125 mc, modulated with 1 kc so as to swing the frequency 15.5 kc ±2 percent.

(4) Adjust the PULSED OSC switch to the ODD CHANNELS position and the PULSED OSC TUNE control to rf channel 1.

(5) Turn the MEASURE switch to the MOD 1KC IN position.

(6) Connect Electronic Multimeter TS–505/U to the wiper of the front of section 1 of MEASURE switch S102.

(7) Adjust DISCR OUT ADJ potentiometer R293 for an output voltage of .39 ±.008 volt.

349. Final Test of Rf Exciter Plug-In Assembly

a. General. The final test of the rf exciter plug-in assembly consists of checking tube currents, RF CHANNEL dial calibration, tracking of the buffer stages, tracking of the modulator, the modulator balance, the modulator sensitivity, the afc capacitor range, and the power output. In performing the final test on this plug-in assembly, a Radio Set AN/TRC–24, which is known to be operating properly, is used. Follow the procedures in the order given.

Caution: Since dangerous voltages are exposed when the transmitter is operating outside of its transit case, make certain that the power is turned off while making connections.

b. Preliminary Procedure.

(1) Place the power-supply 115V AC switch in the OFF position.

(2) Remove the rf exciter plug-in assembly from the transmitter known to be good (par. 162).

(3) Position and connect into the transmitter known to be good the rf exciter assembly to be tested.

(4) Install a B-band tuner in the transmitter if one is not already installed.

(5) Tape the right rear interlock closed.

c. Checking Tube Currents.

(1) Remove the screws that secure the rf exciter cover plate and remove the cover plate.

(2) Remove the three-sided plate shield inside the rf exciter.

(3) Connect the radio transmitter to Power Supply PP–685/TRC. Connect the power supply to a source of 115 ±5.5 volts ac. Place the 115V AC, 150V DC, and 750V DC switches in the ON positions.

(4) Using Electronic Multimeter TS–505/U as a dc voltmeter, measure the voltages across the resistors listed in the table below. Normal indications signify that tube currents of the rf exciter are correct. Refer to figure 217 for location of the resistors.

Tube circuit	Measure across resistor	Normal indication (volts dc)
Screen of first buffer amplifier	R162	35–55
Screen of second buffer amplifier	R169	35–55
Plate of driver	R178	2– 5

(5) Replace the three-sided plate shield inside the rf exciter.

(6) Set the transmitter TEST switch to each position as listed in the chart below and check for normal indications.

Tube circuit	Position of TEST switch	Normal indication on TEST meter (μa)
Plate and screen of reactance modulators and plate of base rf oscillator.	OSC MOD PLATE.	10–16
Driver grid	DRIVER GRID	4–45

d. Checking RF CHANNEL Dial Calibration. Follow the procedures outlined in (1) through (5) below to check that the RF CHANNEL dial is properly calibrated. If it is determined that the RF CHANNEL dial is not properly calibrated, adjust the calibration by following the procedure outlined in (6) below.

(1) Position Frequency Meters AN/URM–80 and AN/URM/81 as close to the base rf oscillator tube V107 as possible.

(2) Adjust the RF CHANNEL TUNE control for an indication of 81.125 mc on the AN/URM–80. The channel 125 marking on the RF CHANNEL dial should be ±2 channels of the movable index pointer. The index pointer should have been set to the nearest decade channel.

(3) Adjust the INDEX control until the movable index pointer is directly over the channel 125 marking. Do not move the INDEX control after this adjustment has been made.

(4) Adjust the RF CHANNEL TUNE control for an indication of 50.125 mc on the AN/URM–80. If the dial is calibrated correctly, the channel 1 marking of the RF CHANNEL dial should be within half a channel of the

index pointer. If the dial is not calibrated correctly, adjust the calibration by following the procedure of (6) below before proceeding with additional checks.

(5) Adjust the RF CHANNEL TUNE control for an indication of 112.375 mc on the AN/URM–81. If the dial is calibrated correctly, the channel 250 marking of the rf channel dial should be within half a channel of the index pointer. If the dial is not calibrated correctly, adjust the calibration by following the procedure of (6) below before proceeding with additional checks.

(6) If the checks above indicate the need for calibration adjustment, follow the procedure outlined in (a) through (*h*) below to correct the calibration.

(*a*) Adjust the INDEX control until the index line is centered.

(*b*) Adjust the RF CHANNEL TUNE control until channel 1 is directly below the index line.

(*c*) Adjust capacitor C142 (fig. 218) until the AN/URM–80 indicates 50.125 mc.

(*d*) Set the PULSED OSC switch to EVEN CHANNELS, the XTAL SEL switch to DECADE CHANS, and the MEASURE switch to RF CHAN TUNE. Adjust the PULSED OSC TUNE and RF CHANNEL TUNE controls to channels 50, 100, 150, 200, and 250 using the MEASURE meter and FREQ DRIFT meter indications. At each channel setting, it should be possible to adjust the index line over the channel marking. If this can be done, the RF CHANNEL TUNE dial is calibrated correctly.

(*e*) If, in (*d*) above, it was not possible to adjust the index line over each channel marking, set the PULSED OSC switch to ODD CHANNELS. Adjust the PULSED OSC TUNE control to channel 1. Adjust the RF CHANNEL TUNE control to channel 1 using the MEASURE meter and FREQ DRIFT meter indications. Center the index line over the channel 1 marking.

(*f*) Adjust the RF CHANNEL TUNE dial until channel 250 is directly below the index line.

(*g*) Adjust inductor L104 until the AN/URM–81 reads 112.375 mc. Inductor L104 is adjusted by squeezing the coil to lower the frequency of the base rf oscillator, or by opening the coil to increase the oscillator frequency.

Caution: Make the adjustments of inductor L104 with the power turned off.

(*h*) Repeat the procedures outlined in (*d*) above to check the final calibration.

e. Checking Calibration of DRIVER TUNE Dial.

(1) Insert the B-band tuner into the transmitter.

(2) Tune the transmitter for maximum power output on rf channel 250B, using the starting procedures outlined in paragraphs 91 through 105*a*. If the DRIVER TUNE dial is calibrated correctly, the 250B rf channel marking will be within ±5 channels from the index of the dial.

f. Checking Tracking of Buffer Stages.

(1) Adjust the RF CHANNEL TUNE control until channel 250 is directly below the index line.

(2) Set the TEST switch to the DRIVER GRID position and detune capacitor C174 (fig. 218) for a minimum current indication on the TEST meter.

(3) Connect Electronic Multimeter TS–505–U as a dc voltmeter between test jacks J109 and J110.

(4) Adjust capacitor C163 for a peak reading on the TS–505/U.

(5) Adjust the RF CHANNEL TUNE control until channel 1 is directly below the index line. Note the TS–505/U reading.

(6) Adjust capacitor C163 for a peak reading on the TS–505/U. If the reading now is within 7 percent of the reading noted in (5) above, the first buffer stage is tracking the base rf oscillator satisfactorily. If satisfac-

381345 O—56——27

tory, adjust the RF CHANNEL TUNE control to channel 250 on the dial and adjust capacitor C163 for a peak reading on the TS–505/U.

(7) If the readings differ by more than 7 percent, adjust the RF CHANNEL TUNE control to channel 250 on the dial. Adjust inductor L107 slightly and repeat the procedures outlined in (4), (5), and (6) above. Continue to adjust inductor L107 until the readings obtained in (5) and (6) above are equal.

(8) Disconnect the TS–505/U.

(9) Adjust the RF CHANNEL TUNE to channel 250 on the dial. Adjust capacitor C174 for a peak reading on the TEST meter.

(10) Adjust the RF CHANNEL TUNE control to channel 1 on the dial. Note the TEST meter reading.

(11) Adjust capacitor C174 for a peak reading on the TEST meter. If the reading now is within 7 percent of the reading noted in (10) above, the second buffer stage is tracking the base rf oscillator satisfactorily. If satisfactory, adjust the RF CHANNEL TUNE control to channel 250 on the dial and adjust capacitor C174 for a peak reading on the TEST meter.

(12) If the readings differ by more than 7 percent, adjust the RF CHANNEL TUNE control to channel 250 on the dial. Adjust inductor L109 slightly and repeat procedures outlined in (9), (10), and (11) above. Continue to adjust inductor L107 until the readings obtained in (10) and (11) above are equal.

g. Checking Tracking of Modulator.

(1) Operate the transmitter MEASURE switch to the MOD ADJ position, and then check that potentiometer R145 is set to its farthest counterclockwise position.

(2) Operate and hold the MTR SENS switch in the nonlocking INCR position.

(3) While holding the MTR SENS switch in the INCR position, rotate the MOD TRIM control to its extreme clockwise and counterclockwise positions while observing the MEASURE meter. If the modulator is tracking correctly, a maximum indication will occur within 70° of the midposition setting of the MOD TRIM control. If this indication is not obtained, check the circuit elements in the reactance modulator circuit.

(4) Set the MOD TRIM control for a maximum MEASURE meter reading. Release the MTR SENS switch.

h. Checking Balance of Reactance Modulator.

(1) Turn the MEASURE switch of the transmitter to the MOD 1KC IN position.

(2) Disconnect plug P102 from jack J104. Connect Signal Generator SG–71/FCC between terminal 1 of connector J104 and ground.

(3) Adjust frequency of the audio oscillator to 1 kc and its power output to the valve that produces an indication of 0 db on the MEASURE meter.

(4) Without altering the audio oscillator adjustments, reconnect the audio oscillator between terminal 2 of connector J104 and ground. The meter should not read less than —4 db. If there is an offscale reading on the +db side of the meter scale, repeat the steps in (3) above using an input signal that will produce a meter deflection of —1 db and repeat the step in (4) above. The meter reading should then not exceed +3 db.

(5) If these requirements are not met, replace the modulator tubes (V105 and V106) and repeat the procedures outlined in (1) through (4) above.

i. Checking Modulation Sensitivity.

(1) Connect the audio oscillator between terminal 1 of connector J104 and ground.

(2) Connect Voltmeter ME–30A/U across the output of the audio oscillator.

(3) Adjust the frequency of the audio oscillator to 24 kc, its impedance to 600 ohms, and its output to .3 volt as indicated on the ME–30A/U.

(4) Connect the output of Signal Generator AN/URM–70 to one of the inputs of the panoramic indicator.

(5) Couple the output of the transmitter driver to the other input of the panoramic indicator by positioning a panoramic indicator test lead about 1 inch from connector J111.

(6) Tune the rf exciter to channel 1 (pars. 91–105*a*).

(7) Adjust the frequency of the AN/URM/70 to 105.250 mc.

(8) Adjust the panoramic indicator to obtain a midscale pip at 0 db and a sweepwidth of 100 kc.

(9) Vary the output of the audio oscillator until minimum (null) deflection is observed at the center pip on the panoramic indicator.

(10) Read the output voltage of the audio oscillator (as indicated on the ME–30A/U when the null occurs on the panoramic indicator. If the sensitivity of the modulator is adequate, the ME–30A/U should read between 225 and .45 volt.

(11) Check the sensitivity of the modulator on channels 125 and 250 by repeating the procedure that was performed in checking channel 1 ((8), (9), and (10) above), except that the 24-kc voltage should be between 0 and 5 db less than that noted in (10) above. To read the panoramic indicator, it will be necessary to adjust the frequency of the AN/URM–70 to 167.250 mc and 229.75 mc when checking channels 125 and 250, respectively.

(12) If the requirements specified in (10) and (11) are not met, replace both modulator tubes and repeat the procedures outlined in (6) through (11) above.

j. Checking Afc Capacitor Range.

(1) Disconnect the audio oscillator and the ME–30A/U from connector J104.

(2) Check to see that the rf exciter is tuned to rf channel 250 (*i*(5) above). Check to see that the AN/URM–70 is still set for 229.75 mc.

(3) Set the controls of the panoramic indicator for a sweepwidth of 500 kc.

(4) Turn and hold the AFC control of the transmitter to the —5 position and note the deviation from center frequency that corresponds to the deflection on the panoramic indicator. These frequencies should be 235 kc from midscale of the panoramic indicator.

(5) Place the AFC control in the 0 position. Check to see that the deflection on the panoramic indicator is at midscale ±50 cps.

(6) Turn and hold the AFC control to the +5 position and note the deviation from center frequency that corresponds to the pip on the indicator.

(7) The sum of the frequency deviations noted in the (4) and (6) above should not be greater than 600 kc or less than 140 kc.

(8) One-half of the difference between the deviations from center frequency noted in (4) and (5) above should not be greater than 12.5 percent of their sum.

(9) If the requirements specified in (4) and (5) above are not met, check the afc capacitor and AFC knob alinement (par. 334*d*).

k. Checking Power Output.

(1) Remove the panoramic indicator.

(2) Connect cable assembly CG–718/U between connector J111 of the rf exciter and Wattmeter ME–82/U.

(3) Tune the rf exciter to each of the rf channels listed in the chart below.

(4) The wattmeter indication should be at least that listed in the chart below.

Rf channel	Power output (watts)
1A	15
1B	6.5
68B	5.0
200A	13
200B	4.0
250B	4

(5) If the requirements specified in (4) above are not met, replace tubes V108, V109, and V110 and repeat (3) and (4) above.

l. Final Procedure.

(1) Operate the power supply switches to the OFF positions.

(2) Disconnect cable assembly CG–718/U from connector J111 of the rf exciter.

(3) Disconnect and remove from the

transmitter the rf exciter plug-in assembly tested.

(4) Replace and connect in the transmitter the rf exciter plug-in assembly removed in *b*(2) above.

(5) Remove the tape that secures the interlock plunger of the transmitter.

(6) Secure the transmitter in its transit case.

350. Final Test of Alarm Amplifier Plug-In Assembly

The final test of the alarm amplifier plug-in assembly is performed to see that the alarm will operate when the input voltage is too low and that the alarm will silence when the input voltage is satisfactory.

a. Pretest Procedure.

(1) Remove the alarm amplifier plug-in assembly from a transmitter that is known to be good. Connect the alarm amplifier to be tested to connector J115 using cable assembly CX–2406/U.

(2) Operate the transmitter ALARM switch to the OFF position.

(3) Disconnect connector P111 from the directional coupler.

(4) Connect a 20,000-ohm potentiometer between —12 volts (terminal K of the RECEIVER connector of the transmitter) and ground (terminal D). Connect the center terminal of the potentiometer to pin 3 on the test-pin block of the maintenance cable. Connect Electronic Multimeter TS–505/U as a dc voltmeter between pin 3 of the test-pin block and ground, pin 2.

(5) Adjust the potentiometer for an indication of —.7 volt on the TS–505/U.

(6) Adjust the THRESHOLD ADJ control until the LOW PWR ALARM lamp first lights.

b. Test Procedure.

(1) Adjust the 20K potentiometer to obtain a reading of —1.0 volt on the TS–505/U.

(2) Gradually adjust the potentiometer to reduce the TS–505/U reading until the LOW PWR ALARM lamp lights. The TS–505/U reading should be between —.55 and —.75 volt.

(3) Adjust the 20K potentiometer for a minimum reading on the TS–505/U. Adjust the potentiometer until the LOW PWR ALARM lamp is extinguished. The reading on the TS–505/U should be between —.65 and —.85 volt.

c. Final Procedure. Disconnect the 20K potentiometer, the TS–505/U, and cable assembly CX–2406/U. Reconnect the removed alarm amplifier plug-in assembly and connector P111.

351. Final Test of Receiver Power Supply Plug-In Assembly

a. General. The final test for the receiver power supply consists of checking the regulation by varying the ac input voltage and by varying the load current, checking the ripple content on the dc output, and checking the heater supply voltage with the dc output under full load.

b. Connections. Prior to actual testing, make the following connections in the sequence outlined in (1) through (6) below.

(1) Strap terminals A and K of connector J131 together. This jumper shorts out the interlock so that ac supply voltage is applied to the power transformer.

(2) Connect a 50-watt, 1.5-ohm load resistor between terminals E and F of connector J131, and another resistor of the same value between terminals H and F.

(3) Connect an ac voltmeter (Electronic Multimeter TS–505/U) across terminals A and J of connector J131. This will measure the ac input supply voltage.

(4) Connect the positive terminal of a dc milliammeter (Multimeter TS–352/U) to test jack J130 (regulated voltage). Connect the other lead of the meter to one side of a variable load resistor of 1,500 ohms, 100 watts. Using the TS–352/U, adjust the variable resistor to approximately 1,000 ohms. Connect the other side of this load resistor to test jack J128 (ground). Adjust the meter to the 500-ma range.

(5) Connect one lead of an ac voltmeter (Voltmeter ME–30A/U) to one side of the variable load resistor. Connect

the other lead of the ac voltmeter to one side of a .1-μf capacitor. Connect the other side of the capacitor to the other side of the variable load resistor. Thus, the ME–30A/U is connected across the load resistor.

Caution: Check to see that the ME–30A/U is adjusted for the maximum voltage range.

(6) Connect the power supply under test to autotransformer TF–167/TRC as for normal operation.

c. Test for Regulation and Ripple Output. The power supply output voltage will be checked for regulation and ripple content at various input voltages and various loads.

(1) Adjust the input voltage to the value specified in the first column of the chart below.

(2) Adjust the variable load resistor for the output current specified in the second column of the chart.

(3) Disconnect the TS–505/U from terminals A and J of connector J131 and connect it as a dc voltmeter (200-volt range) across the variable load resistor.

(4) For test 1 only, adjust the 150V ADJ control, R226, until the TS–505/U indicates 150 volts. Do not alter this adjustment during the following tests. If necessary, readjust the variable load resistor to obtain the specified load current of 140 ma.

(5) In tests 2, 3, and 4, check that the dc output voltage is within the limits specified in the third column of the chart.

(6) From the ME–30A/U, determine the ripple voltage present in the power supply dc output. The ripple voltage should not exceed the value specified in the last column of the chart.

Test	Ac input supply voltage (volts ac)	Dc output load current (μa)	Dc output voltage (volts dc)	Ripple voltage (millivolts ac)
1	115 ±1	140	150	5
2	115 ±1	255	149.7–150	5
3	103 ±1	255	149 –150	8
4	127 ±1	140	150 –151	9

d. Test for Output Voltage Range.

(1) Adjust the ac supply voltage to 115 ±1 volts.

(2) Adjust the variable load resistor for an output current of 255 ma at 150 volts dc.

(3) Adjust resistor R226 from its extreme clockwise to its extreme counterclockwise position and observe the indications on the TS–505/U. The output voltage should be adjustable at least from 140 to 160 volts.

e. Test for Heater Voltage.

(1) Adjust ac input voltage to 115 ±1 volts.

(2) Connect an ac voltmeter (TS–505/U) across the 1.5-ohm load resistor that is connected between terminals E and F of connector J131. The voltage should be between 6.3 and 6.8 volts ac.

(3) Connect the voltmeter between terminals H and F of connector J131. The voltage should be between 6.3 and 6.8 volts ac.

f. Final Procedure.

(1) If the requirements specified in *d* and *e* above are not met, check the voltage and resistance measurements in the receiver power supply (fig. 205). After replacement of any defective parts, repeat the test that indicated trouble.

(2) If the test requirement specified in *f* above is not met, replace power transformer T102.

(3) Set the POWER switch to OFF and remove the connections that were made in *b* above.

352. Final Test of Calibrator Plug-In Assembly

a. General. The final test of the calibrator consists of aligning the oscillator and checking both the oscillator frequency and the amplitude of the harmonic outputs.

b. Pretest Procedure.

(1) Remove the calibrator plug-in assembly from a radio receiver known to be in normal operating condition.

(2) Connect cable assembly CX–2406/U between connector P107 of the calibrator assembly to be tested and connector J112 of the radio receiver.

c. Oscillator Alinement.

(1) Connect Electronic Multimeter TS–505/U as a dc voltmeter between test jack J111 and ground.

(2) Adjust inductor L107 (fig. 249) for a maximum indication on the TS–505/U. Then decrease the inductance by turning the tuning slug out until the TS–505/U reading has decreased to 90 percent of its maximum value.

d. Oscillator Output Frequency Test.

(1) Connect Frequency Meter AN/URM–80 across connector J110.

(2) Tune the frequency meter from 10 to 12 mc. A maximum indication should be observed at 11.0 mc.

e. Harmonic Amplitude Test.

(1) Connect Signal Generator TS–497/URR to one of the input terminals of Panoramic Indicator IP–173/U.

(2) Connect Signal Generator AN/URM/70 to the other input terminal of the panoramic indicator.

(3) Adjust the TS–497/URR frequency to 55 mc and its output voltage to 25 microvolts.

(4) Adjust the AN/URM–70 frequency to 60 mc and its output voltage to maximum.

(5) Adjust the gain of the panoramic indicator so that the amplitude of the indication on the LIN scale is 10.

(6) Disconnect the TS–497/URR from the panoramic indicator.

(7) Disconnect the 50-ohm terminating resistor from jack J110 and connect jack J110 to the panoramic indicator. The pip on the IP–173/U indicates the amplitude of the fifth harmonic (55 mc) of the crystal oscillator frequency. The amplitude should not be lower than 10 on the panoramic indicator.

(8) Slowly increase the AN–URM–70 frequency from 60 mc to its maximum frequency and note the amplitude of each pip (each harmonic output). The amplitude of each pip should not be lower than 10.

353. Final Test of Receiver If. Amplifier Plug-In Assembly

a. General. The final test of the 30-mc if. amplifier consists of checking the bias range, of checking the bandwidth and gain, of aligning the amplifier if necessary, and of checking the automatic gain control, the squelch operation, and the output used for signal level indications. The amplifier assembly cover should remain on during the following tests and adjustments.

b. Pretest Procedure. Perform the procedure outlined in (1) through (5) below before testing the if. amplifier.

(1) Remove the if. amplifier assembly from a radio receiver known to be in normal operating condition.

(2) Connect cable assembly CX–2406/U between connector P109 of the if. assembly to be tested and connector J115 of the radio receiver.

(3) Connect Signal Generator TS–497/URR to input jack J113 through the 50- to 72-ohm, 6-db pad.

(4) Connect a 75-ohm resistor across jack P108.

(5) Connect an ac voltmeter (Electronic Multimeter TS–505/U) across the 75-ohm resistor.

c. Bias Range Test. To test the bias range, follow the procedure outlined in (1) through (5) below.

(1) Adjust the output voltage of the signal generator to zero.

(2) Turn the SQUELCH control to its extreme clockwise position.

(3) Connect a dc voltmeter (Electronic Multimeter TS–505/U) between test jack J114 (AGC VOLTS) and ground. The measured voltage should be —2.55 ±.25 volts.

(4) Readjust the SQUELCH control to its extreme counterclockwise position.

(5) The dc voltmeter should now read —7.5 ±1 volts.

d. Gain Test. To test the 30-mc if. amplifier gain, follow the procedure outlined in (1) through (6) below.

(1) Connect a dc voltmeter (Electronic Multimeter TS–505/U) between test jack J114 and ground.

(2) Adjust the SQUELCH control until the dc voltmeter reads —3.3 volts.

(3) Adjust the signal generator frequency to 30.0 mc and its output to give 20-microvolt input to the amplifier.

(4) The ac voltmeter (Electronic Multimeter TS–505/U) across output connector P108 should read at least .36 volt, indicating a voltage gain of at least 85 db. If the gain is not high enough, refer to *e*(7) below.

(5) Adjust the SQUELCH control until the dc voltmeter across test jack J114 and ground reads —6.0 volts.

(6) Change the input to the amplifier to 200 microvolts. The ac voltmeter across output connector P108 should not read more than .63 volt (gain of 70 db).

(7) Connect plug P108 to jack J116, and connect the signal generator to the input connector, J113, of the if. amplifier.

e. Bandwidth Test. To test the bandwidth of the if. amplifier, follow the procedure outlined in (1) through (6) below.

(1) Set the MEASURE switch to the SIG LEV position.

(2) Adjust the frequency of the signal generator to 30.0 mc ±25 kc. Adjust its output level and the position of the SQUELCH control so that a steady reading of approximately 27.5 μa is obtained on the MEASURE meter and the setting of the output attenuator of the signal generator can be reduced by 30 db before reading its limit of rotation.

(3) Determine the bandwidth of the amplifier as follows:

(*a*) Reduce the setting of the signal generator attenuator by a specific number of decibels and note the corresponding MEASURE meter indication.

(*b*) Set the attenuator back to its original setting.

(*c*) Increase the signal generator frequency above 30.0 mc until the MEASURE meter reads the same as in (*a*) above. Note the frequency difference from 30.0 mc.

(*d*) Repeat this procedure decreasing the frequency below 30.0 mc.

(4) Check the bandwidth by the above method with the signal generator attenuator set 3 db, 12 db, and 30 db below the original setting. The deviations from the center frequency at each setting should be as listed below.

Db	Kc
3	340 ±25
12	620 ±50
30	1,000 ±100

(5) If the test limits specified in (1) through (6) above are not met, if tubes in the if. amplifier have been replaced, or if the if. gain is too low, it will be necessary to aline the receiver if. amplifier. To do this, follow the procedure outlined in (*a*) through (*e*) below.

(*a*) Adjust the TS–497/URR frequency to 30 mc.

(*b*) Operate the receiver MEASURE switch to the SIG LEV position. Adjust the output level of the signal generator and the setting of the SQUELCH control to obtain a steady reading below 20 μa on the MEASURE meter.

(*c*) With the alinement tool, stored behind the top of the receiver front panel, adjust the movable cores of inductors L111 through L122 (fig. 237) for a maximum indication on the TS–505/U. The TS–505/U is connected across output jack P108. As each of the inductors is adjusted, check to see that the reading on the MEASURE meter remains below 20 μa. If necessary, adjust the SQUELCH control to reduce the MEASURE meter reading. Readjust each of the inductors.

(d) Repeat the procedure outlined in (1) through (6) above to determine whether the alined if. amplifier meets the bandwidth requirements. Repeat the procedure outlined in *d* above to see if the alined if. amplifier meets the gain requirements

f. Agc Test. To test the automatic gain control circuit, follow the procedure outlined in (1) and (2) below.

(1) Connect the TS–497/URR to connector J113 of the if. amplifier, and terminate the output connector, P108,

with 75 ohms. Turn the SQUELCH control to its extreme clockwise position.

(2) With the frequency of the signal generator set to 30 mc, increase the output voltage indicated on the output attenuator of the signal generator from 100 microvolts to 100,000 microvolts. The output from connector P108 as read on the ac voltmeter should not increase by a ratio of more than 1.41 (3-db gain). If these requirements are not met, check tube V108.

g. Squelch Operation Test. To test the operation of the squelch circuit, follow the procedure as outlined in (1) through (6) below.

(1) Adjust SQUELCH control to its extreme clockwise position.

(2) Reduce the signal generator output voltage to zero.

(3) Connect a dc voltmeter (Electronic Multimeter TS–505/U) between terminal 13 of connector P109 and ground. The voltage should be more than +30 volts.

(4) Increase the signal input from the signal generator until the voltage measured between terminal 13 of connector P109 and ground has been reduced to +10 volts. The input voltage from the signal generator should be less than 30 microvolts (indicated on the output attenuator).

(5) Adjust the SQUELCH control to its extreme counterclockwise position.

(6) Increase the signal generator output until the dc voltmeter reading is reduced to +10 volts. The signal generator output should not be less than 20,000 microvolts.

(7) If these requirements are not met, check tube V125.

h. Signal Level. To test the output which is used for signal level indications, follow the procedure as outlined in (1) through (3) below.

(1) Adjust the SQUELCH control to its extreme clockwise position.

(2) Adjust the signal generator frequency to 30.0 mc and its output to 20,000 microvolts.

(3) Operate the MEASURE switch to the SIG LEV position. The MEASURE meter M102 should read between 25 and 40 μa.

354. Final Test of Limiter, Discriminator, and Afc Plug-In Assembly

a. General. The final testing of this plug-in assembly consists of measuring the crystal-rectifier currents of the first and second limiters and of testing the discriminator, the deemphasis circuit, the automatic frequency control circuit, and the bias supply. For these tests, this plug-in assembly will be connected through cable assembly CX–2406/U to a receiver known to be good.

b. Pretest Procedure.

(1) Remove the limiter, discriminator, and afc plug-in assembly from a radio receiver known to be in normal operating condition.

(2) Connect cable assembly CX–2406/U from connector P111 of the plug-in assembly to be tested to connector J119 of the radio receiver.

(3) Disconnect cable W104 from connector J113, the input jack of the if. amplifier. Connect Signal Generator TS–497/URR across this input jack.

(4) Using cable assembly CG–789A/U, connect the output jack of the if. amplifier, P108, to the input jack, J116, of the limiter, discriminator, and afc.

(5) Connect a 50,000-ohm terminating resistor across output jack J117.

(6) Adjust the SQUELCH control to its maximum clockwise position.

c. Limiter Alinement.

(1) Adjust the TS–497/URR frequency to 30.0 mc.

(2) Operate the receiver MEASURE switch to the 1ST LIM position and adjust the output level of the TS–497/URR to produce a reading of 5 μa on the MEASURE meter.

(3) Adjust inductor L124 (fig. 235) for a maximum indication on the MEASURE meter. Reduce the TS–497/URR output to keep the MEASURE meter reading from exceeding 5 μa. Readjust inductor L124 for maximum.

(4) Operate the MEASURE switch to the 2ND LIM position and adjust inductor L127 for a maximum indication on the MEASURE meter. Reduce the TS–497/URR output to keep the meter reading below 5 μa. Readjust inductor L127 for maximum on the MEASURE meter.

d. Limiter Test.

(1) Operate the MEASURE switch to the SIG LEV position and adjust the TS–497/URR output for a reading of 20 μa on the MEASURE meter. Note the TS–497/URR output.

(2) Set the MEASURE switch to the 1ST LIM position.

(3) The MEASURE meter should indicate at least 5 μa.

(4) Adjust signal generator output to one-third of the output noted in (1) above.

(5) Set the MEASURE switch to the 2nd LIM position.

(6) The MEASURE meter should indicate at least 5 μa.

(7) Adjust the output of the signal generator to make the MEASURE meter exactly 5 μa.

(8) Increase the output of the signal generator 1.41 times the output in (7) above. The reading of the MEASURE meter should increase.

(9) Increase the frequency of the signal generator above 30.0 mc until the MEASURE meter indicates 5 μa.

(10) Repeat the procedure in (9) above, decreasing the frequency below 30.0 mc.

(11) The difference between the frequencies noted in (9) and (10) above should be 2.2 ±.5 mc.

e. Discriminator Test.

(1) Adjust the output frequency of Signal Generator TS–497/URR until the FREQ DRIFT meter indicates 0 μa.

(2) Remove the V108 of the plug-in assembly, and adjust signal generator output voltage until the MEASURE meter on 2nd LIM indicates 10 μa.

(3) The input frequency (checked with the AN/URM–80) that produces 0 μa on the FREQ DRIFT meter should be 30 mc ±25 kc. This is the center frequency.

(4) Adjust the input frequency above the center frequency until the FREQ DRIFT meter indicates maximum in the positive direction. Record the frequency. Readjust the input frequency below the center frequency until the FREQ DRIFT meter indicates a maximum negative deflection. Record this frequency. The difference between these two frequencies as checked with the AN/URM–80 should be 1.85 mc ±.1 mc.

(5) Increase the input frequency above 30.0 until a maximum deflection to the right is obtained on the FREQ DRIFT meter. The input frequency should be 925 ±50 kc greater than 30 mc.

(6) Repeat the procedure of (5) above, decreasing the input frequency below 30.0 until a maximum deflection to the left is obtained. The deflection of the meter should be within 6 percent of that of (5) above. The frequency deviation from 30.0 mc should be within 100 kc of that of (5) above.

(7) Adjust the frequency of the generator to 29.4 mc and note the reading of the FREQ DRIFT meter. Increase the frequency to 29.8 mc and note the meter reading. This reading should be within 5 percent of one-third of the reading at 29.4 mc.

(8) Repeat the procedure of (7) above, increasing the input frequency to 30.2 mc. The reading at 30.2 should be within 5 percent of one-third of the reading at 30.6 mc.

f. Discriminator Alinement. If the test requirements specified in *e* above are not met, follow the procedure outlined in (1) through (23) below to aline the receiver discriminator.

(1) Disconnect the ground wire from terminal 1 of network Z111, and replace the assembly cover.

(2) Using the AN/URM–80, adjust the signal generator frequency to 30.0 mc and its output to .1 volt.

(3) Adjust capacitor C205 for a zero reading on the FREQ DRIFT meter.

(4) Vary the signal generator frequency between 29.0 and 31.0 mc and observe the FREQ DRIFT meter. No deflections should be seen. If deflections are noted as the input frequency is varied, readjust capacitor C205 until the deflections are at a minimum.

(5) Reconnect the ground wire to terminal 1 of network Z111, and replace the assembly cover.

(6) Using the AN/URM–80, adjust the signal generator frequency to 30.0 mc.

(7) Adjust the slug of inductor L132 to obtain a zero reading on the FREQ DRIFT meter.

(8) Change the signal generator frequency to produce a reading of 5 μa on the FREQ DRIFT meter.

(9) Adjust the slug of inductor L131 (which is accessible from the bottom of the chassis) to obtain a maximum reading on the FREQ DRIFT meter.

(10) Repeat the procedures outlined in (6) and (7) above.

(11) Increase the signal generator frequency to obtain a peak deflection on the FREQ DRIFT meter. The signal generator frequency as checked with the AN/URM–80 should be between 30.9 and 31.1 mc. Note the amplitude of the peak deflection.

(12) Decrease the signal generator frequency below 30 mc to obtain a peak deflection frequency on the FREQ DRIFT meter. The signal generator frequency as checked with the AN/URM–80 and the upper frequency ((11) above) should differ in frequency from 30 mc by amounts equal within 50 kc. The magnitude of the peak deflection should be approximately equal to that obtained in (11) above.

(13) If the requirements of equal peaks and equal frequency separation ((11) and (12) above) are not met, follow the procedure outlined in (14) through (22) below to complete and check the alinement of the receiver discriminator. If the requirements are met, follow the procedure outlined in (22) below to check the alinement.

(14) Operate the receiver MEASURE switch to the 2nd LIM position.

(15) Using the AN/URM–80, adjust the signal generator to the frequency above or below 30 mc which produces the lower amplitude peak.

(16) Adjust the signal generator output to produce a reading of 20 μa on the MEASURE meter.

(17) Adjust the slug of inductor L131 to increase the peak deflection to equal that of the higher amplitude peak.

(18) Using the AN/URM–80, adjust the signal generator frequency to 30 mc and its output until a reading of 20 μa is obtained on the MEASURE meter.

(19) Adjust the slug of inductor L132 for a zero reading on the FREQ DRIFT meter.

(20) Vary the signal generator frequency above and below 30 mc and compare the amplitudes of the two peaks obtained on the FREQ DRIFT meter.

(21) Repeat the procedures outlined in (15) through (20) above until the two peaks are equal in magnitude. The two equal peaks should occur at frequencies (checked with AN/URM–80) from 30 mc by amounts equal within 50 kc.

(22) Record the FREQ DRIFT meter reading with input frequencies (checked with the AN/URM–80) of 29.4 mc, 29.8 mc, 30.2 mc, and 30.6 mc. The meter readings at 29.4 mc and 30.6 mc should be between 19.5 and 31 μa. The meter reading at 29.8 should be within 5 percent of one-third of the reading at 29.4. The meter reading at 30.2 should be within 5 percent of one-third of the reading at 30.6 mc.

(23) Replace tube V108 of the if. plug-in assembly.

g. Deemphasis Test. To test the deemphasis circuit, follow the procedures outlined in (1) through (14) below.

(1) Remove cable assembly CX–2406/U from the plug-in assembly and remove the cover.

(2) Connect the output of Signal Generator SG–71/FCC between pin 1 of discriminator tube V111 and ground.

(3) Connect an ac voltmeter (Voltmeter ME–30A/U) across output jack J117.

Note. The total load across jack J117 should be equivalent to a 30-$\mu\mu$f capacitor shunted by a 50K resistor. The input capacitance of the ME–30A/U, which is almost 30 $\mu\mu$h, and the 50K resistor, which was connected across jack J117 (*b*(4) above), provide the required load. If a substitute meter is used in place of the ME–30A/U, see that the load requirements are met.

(4) Adjust the output frequency of the audio oscillator to 1,000 cps, and adjust the output voltage of the audio oscillator so that the ac voltmeter reads +10 db on the 1-volt scale.

(5) Connect the ac voltmeter (ME–30A/U) across the output of the audio oscillator and record the voltage reading.

(6) Adjust frequency of audio oscillator to 250 cps. Readjust the voltage output of the audio oscillator to the same value as recorded in (5) above.

(7) Connect the ac voltmeter (ME–30A/U) across output jack J117. The ac voltmeter should indicate 10 ±2 db on the 1-volt scale.

(8) Connect the ac voltmeter (ME–30A/U) across the output of the audio oscillator, and adjust the frequency of the audio oscillator to 4,000 cps. If the ac voltmeter indicates a value other than that recorded in (5) above, readjust the output voltage of the audio oscillator.

(9) Connect the ac voltmeter (ME–30A/U) across output jack J117. The meter should indicate 9.95 ±.2 db on the 1-volt scale.

(10) Connect the ac voltmeter (ME–30A/U) across the output of the audio oscillator, and adjust the output frequency of the audio oscillator to 8,000 cps.

(11) Readjust the output voltage of the audio oscillator to the value recorded in (5) above.

(12) Connect the ac voltmeter (ME–30A/U) across output jack J117.

(13) The ac voltmeter should read 5.9 ±.2 db on the 1-volt scale.

(14) Continue the above procedure maintaining a constant signal generator output (voltage recorded in (5) above) at each of the frequencies listed below. The ME–30A/U at jack J117 should have the readings listed below:

Frequency (cps)	ME–30A/U reading (db)
16,000	9.4 ±.2
32,000	7.9 ±.2
48,000	6.2 ±.2
68,000	4.3 ±.2

h. Afc Test.

(1) Connect cable assembly CX–2406/U from connector P111 to connector J119.

(2) Place the MEASURE switch in the AFC BAL position.

(3) Set and hold the AFC DISABLE switch to the AFC DISABLE position.

(4) Adjust the AFC BAL potentiometer for a minimum indication on the MEASURE meter. The minimum should be less than 10 μa.

(5) Connect the ME–30A/U between terminals 1 and 12 on the test-pin block. With the AFC DISABLE switch held in the operated position and the AFC BAL potentiometer set to a minimum output as in (4) above, the meter should read less than 1.0 volt.

(6) Release the AFC DISABLE switch. The MEASURE meter should indicate zero.

(7) Place the MEASURE switch in the 2D LIM position.

(8) Adjust the output of the TS–497/URR, which is connected across input jack J116, for an indication of 10 μa on the MEASURE meter.

(9) Connect the TS–505/U as a dc voltmeter between the junction of resistors R193 and R194 (input to the afc modulator) and ground. Adjust the frequency of the TS–497/URR for a reading of +.20 volt on the TS–505/U.

(10) The ME–30A/U reading should be between 3.83 and 5.2 volts.

(11) Set the AFC-OFF-CAL switch to the AFC position. The AFC control on the tuner should rotate continuously. Set the switch back to the OFF position. The rotation of the AFC should cease.

(12) Reverse the connection of the TS–505/U and adjust the frequency of the TS–497/URR for a reading of .20 volt on the TS–505/U. If necessary, readjust the output of the TS–497/URR to make the MEASURE meter read 10 μa with the MEASURE switch in the 2D LIM position.

(13) Connect the ME–30A/U between terminals 12 and 1. The meter should read between 3.8 and 5.2 volts.

(14) Set the AFC-OFF-CAL switch to the AFC position. The AFC control on the tuner should rotate continuously in the direction opposite to that noted in (11) above. Set the switch to the OFF position.

i. Bias Supply Test.

(1) Remove the cover.

(2) Using Frequency Meter AN/URM–32, check the frequency of the bias oscillator. The frequency meter should read between 500 and 510 kc. If the frequency is off, adjust inductor L134 to bring the frequency to 505 kc.

(3) Connect Electronic Multimeter TS–505/U as a dc voltmeter between test jack J118 and ground. The bias voltage as measured should be at least —90 volts.

355. Final Test of Autotransformer TF–167/TRC

Follow the procedure outlined in *a* through *m* below to check the autotransformer TF-167/TRC.

a. Interconnect the receiver, transmitter, and power supply of a Radio Set AN/TRC–24 which is known to be operating properly.

b. Connect the receiver and the power supply of the radio set to the autotransformer TF–167/TRC to be tested.

c. Connect the 115–230V AC INPUT jack of the autotransformer TF–167/TRC to be checked to an Interconnecting Box P–532/U which is known to be operating properly.

d. Operate the source voltage interconnecting link inside the interconnecting box to the 115-volt position.

e. Connect the AC 115/230V jack of the interconnecting box to a source of power the output of which can be varied from 95 to 130 volts.

f. Connect Electronic Multimeter TS–505/U to the CONV OUT jack on the autotransformer TF–167/TRC.

g. Turn the power source on and place the receiver POWER switch and the power-supply 115V AC, 150V DC, and 750V DC switches in the ON positions.

Note. Wait at least 1 minute before making any measurements.

h. Vary the output of the power source from 95 to 130 volts in 5-volt steps. At each step adjust the INCR OUT switch on the autotransformer TF–167/TRC for an indication of 115 ± 5.5 volts on the TS–505/U. This is a normal indication. If an indication of 115 ± 5.5 volts is not obtained on the TS–505/U, the autotransformer is defective.

i. Turn off the source of power, disconnect the interconnecting box from the source of power, and operate the source voltage interconnecting link in the interconnecting box to the 230-volt position.

j. Connect the AC 115/230V jack of the interconnecting box to a source of power the output of which can be varied from 190 to 260 volts.

k. Repeat the procedures outlined in *g* above.

l. Vary the output of the power source from 190 to 260 volts in 10-volt steps. At each step adjust the INCR OUT switch on the autotransformer TF–167/TRC for an indication of 115 ± 5.5 volts on the TS–505/U. This is a normal indication. If an indication of 115 ± 5.5 volts is not obtained on the TS–505/U, the autotransformer TF–167/TRC is defective.

m. Turn off the source of power and disconnect all the components.

356. Final Test of Band-Pass Filters

a. General. The final test for a band-pass filter consists of checking and if necessary adjusting the dial calibration, and of checking the insertion loss at a frequency to which the

band-pass filter is tuned and at frequencies other than the tuned frequency.

b. Test Circuit. Only one test circuit is required for performing all the tests on a band-pass filter. To set up the test circuit, follow the procedure outlined in (1) through (4) below.

(1) Connect the output of Signal Generator AN/URM–70 to input connector P1 of the band-pass filter.

(2) Using cable assembly CG–1031/U, connect output connector P2 of the band-pass filter to one of the input connectors on Panoramic Indicator IP–173/U.

(3) Connect the output of Signal Generator TS–497/URR to the other input connector on Panoramic Indicator IP–173/U.

(4) Connect the signal generators and the panoramic indicator to ac outlets providing approximately 115-volt, single-phase outputs.

c. Dial Calibration.

(1) *Checking calibration.* The dial calibration of a band-pass filter will be checked near the two extremes of the frequency range. To check the dial calibration, follow the procedure outlined in (*a*) through (*c*) below.

(*a*) Using the AN/URM–81, adjust the frequency of each signal generator to the first frequency listed in the chart below for that signal generator and for the band-pass filter under test. Adjust each signal generator for a maximum output without modulation.

(*b*) Adjust the dial knobs successively to obtain a maximum indication on the panoramic indicator. When set for maximum indication, each dial should indicate the rf channel listed in the third column under *Checking calibration* in the chart below.

(*c*) Repeat the procedures outlined in (*a*) and (*b*) above for the second set of frequencies listed under *Checking calibration* in the following chart for the filter under test.

(2) *Adjusting calibration.* If the procedures of *c*(1) above indicate that the dial calibration is faulty, follow the procedures outlined in (*a*) through (*e*) below.

(*a*) Adjust each of the signal generators to the frequency listed under adjusting calibration in the following chart.

(*b*) Loosen the nuts in the center of the dial knob.

(*c*) Adjust the center screws successively for a maximum indication on the panoramic indicator.

(d) Hold the center screw thereby retaining the adjustment obtained in (*c*) above, and rotate the dials to the *Rf channel* indicated in the last column of the chart below.

(*e*) Tighten the nuts securely while retaining the adjustments of (*c*) and (*d*) above.

Band-pass filter	Checking calibration			Adjusting calibration		
	AN/URM–70 freq (mc)	TS–497/URR freq (mc)	Rf channel	AN/URM–70 freq (mc)	TS–497/URR freq (mc)	Rf channel
F–192/U	100.75 119.75	105.75 124.75	2 ±3 40 ±3	109.75	114.75	20
F–193/U	121.75 140.75	126.75 145.75	44 ±3 82 ±3	130.75	135.75	62
F–194/U	142.75 161.75	147.75 166.75	86 ±3 124 ±3	150.75	155.75	102
F–195/U	163.75 182.75	168.75 187.75	128 ±3 166 ±3	171.75	176.75	144

Band-pass filter	Checking calibration			Adjusting calibration		
	AN/URM-70 freq (mc)	TS-497/URR freq (mc)	Rf channel	AN/URM-70 freq (mc)	TS-497/URR freq (mc)	Rf channel
F-196/U	184.75 203.75	189.75 208.75	170 ±3 208 ±3	191.75	196.75	184
F-197/U	205.75 224.75	210.75 229.75	212 ±3 250 ±3	212.75	217.75	226
F-199/U	225.50 251.50	230.50 256.50	26 ±3 52 ±3	231.50	236.50	32
F-200/U	255.50 281.50	260.50 286.50	56 ±3 82 ±3	261.50	266.50	62
F-201/U	285.50 311.50	290.50 316.50	86 ±3 112 ±3	291.50	296.50	92
F-202/U	315.50 341.50	320.50 346.50	116 ±3 142 ±3	321.50	326.50	122
F-203/U	345.50 371.50	350.50 376.50	146 ±3 172 ±3	351.50	356.50	152
F-204/U	375.50 401.50	380.50 396.50	176 ±3 202 ±3	381.50	386.50	182

d. Checking Insertion Loss. This check will provide an indication of the selectivity of the band-pass filter. To check the insertion loss, follow the procedure outlined in (1) through (8) below.

(1) Disconnect the band-pass filter from the test circuit and connect Signal Generator AN/URM-70 to the input connector of the indicator to which the band-pass filter was connected.

(2) Adjust the signal generators to the frequencies listed in the chart below for test 1 of the filter under test.

(3) Adjust the panoramic indicator until the top of the pip is at +20 db on the db scale. Do not change this adjustment during the remainder of the test of the filter.

(4) Reconnect the test circuit as described in *b* above.

(5) Tune the base-band filter for maximum indication on the panoramic indicator. The top of the pip should be coincident with +19 or higher on the db scale.

(6) Readjust the signal generators to the frequencies listed in the chart below for test 2 of the filter. Do not retune the band-pass filter. The top of the pip should be between the limits indicated in the last two columns of the following chart.

(7) Repeat (6) above for test 3 of the filter.

(8) The band-pass filter, to be considered acceptable, must meet the requirements specified for tests 1, 2, and 3.

Band-pass filter	Test No.	AN/URM-70 freq (mc)	TS-497/URR freq (mc)	Output on panoramic indicator (db)	
				Minimum	Maximum
F-192/U	1	110.00	105.00	+19	
	2	95.00	90.00	−19	−12
	3	122.00	117.00	−20	−13

Band-pass filter	Test No.	AN/URM-70 freq (mc)	TS-497/URR freq (mc)	Output on panoramic indicator (db)	
				Minimum	Maximum
F-193/U	1	131.00	126.00	+19	
	2	116.00	111.00	−19	−13
	3	143.00	138.00	−20	−14
F-194/U	1	152.00	147.00	+19	
	2	137.00	132.00	−20	−14
	3	164.00	159.00	−20	−15
F-195/U	1	173.00	168.00	+19	
	2	158.00	153.00	−20	−14
	3	185.00	180.00	−20	−15
F-196/U	1	194.00	189.00	+19	
	2	179.00	174.00	−20	−14
	3	206.00	201.00	−20	−14
F-197/U	1	215.00	210.00	+19	
	2	200.00	195.00	−20	−14
	3	227.00	222.00	−20	−14
F-199/U	1	238.00	233.00	+19	
	2	218.00	213.00	−20	−13
	3	253.00	248.00	−20	−12
F-200/U	1	268.00	263.00	+19	
	2	248.00	243.00	−20	−13
	3	283.00	278.00	−20	−12
F-201/U	1	298.00	293.00	+19	
	2	278.00	273.00	−20	−13
	3	313.00	308.00	−20	−11
F-202/U	1	328.00	323.00	+19	
	2	308.00	303.00	−20	−13
	3	343.00	338.00	−20	−11
F-203/U	1	358.00	353.00	+19	
	2	338.00	333.00	−19	−12
	3	373.00	368.00	−19	−10
F-204/U	1	388.00	383.00	+19	
	2	368.00	363.00	−18	−12
	3	403.00	398.00	−17	−9

Section IV. FINAL TEST OF RADIO RECEIVER R–417/TRC

357. General Instructions for Receiver Final Testing

a. This section is intended as a guide in determining the quality of a repaired receiver. The test procedures outlined in paragraphs 359 through 367 may be performed by maintenance personnel with adequate test equipment and the necessary skills. Repaired equipment meeting the specified requirements will furnish uniformly satisfactory results.

b. The procedures must be performed in the order listed with the exception of the final test for distortion (par. 367). This final test must be performed after the other final tests of the receiver, but may be performed alone as an aid to locate distortion in the receiver.

c. Do not connect or remove test equipment at the end of each test unless the instructions direct it.

358. Test Equipment Required for Testing Radio Receiver R–417/TRC

Quantity	Test equipment	Technical manual
1	Signal Generator TS–497/URR	TM 11–5030.
1	Matching pad, 50 to 72 ohms, 6-db.	
1	Matching pad, 50 to 50 ohms, 6-db	
1	Signal Generator AN/URM–70	
1	Signal Generator SG–92/U	TM 11–319.
1	Signal Generator SG–71/FCC	TM 11–5088.
1	Panoramic Indicator IP–173/U	TM 11–5086.
1	Oscilloscope OS–8A/U	TM 11–1214.
1	Transmission Measuring Set TS–569/FT.	TM 11–2049.
1	Electronic Multimeter TS–505/U.	TM 11–5511.
1	Voltmeter ME–30A/U.[a]	
1	Frequency Meter AN/URM–81.	
1	Band-pass filter, 5-kc band pass.	
1	Band-pass filter, 10-kc band pass.	
1	Resistor, 250 ohms.	
1	Resistor, 10 ohms.	
2	Resistor, 600 ohms.	
1	Resistor, 10,000 ohms.	

[a] Electronic Multimeter ME–6/U may be used if Voltmeter ME–30A/U is not available. TM 11–5549 covers the ME–6/U.

359. Preliminary Procedure

a. Connect the receiver to be tested to a radio set known to be operating properly (par. 71).

b. Connect the radio set to a regulated source of 115 volts ac and operate the power-supply 115V AC switch and the receiver POWER switch to their OFF positions.

c. Insert a B-band tuner in the receiver.

d. Insert a dummy filter in the receiver.

e. Connect Handset H–90/U to the HANDSET jack of the receiver.

f. Tune the receiver to rf channel 124 using the procedure outlined in paragraphs 109 through 113*a*.

g. Connect Signal Generator TS–497/URR to the ANTENNA jack of the receiver through the 50- to 50-ohm, 6-db pad.

h. Adjust the controls of the receiver as given in the table below.

Control or switch	Position
MEASURE switch	SIG LEV.
AFC-OFF-CAL switch	OFF.
TALK-RING	TALK.
ALARM switch	NOR.
SQUELCH	Maximum clockwise.
600 OHMS-135 OHMS switch	135 OHMS.

i. Disconnect any cable connections at the CABLE CONNECTIONS binding posts of the receiver.

j. Connect the REC binding posts of the receiver to the 135-ohm input terminals of Transmission Measuring Set TS–569/FT.

k. Adjust the needles on the receiver MEASURE and FREQ DRIFT meters to zero by means of adjustment screws on the front panels of these meters.

l. Place the receiver POWER switch in the ON position.

m. Turn the receiver MEASURE switch to the B+ position.

n. Remove the receiver from its transit case (par. 156) and adjust resistor R226 for an indication of 30 μa on the receiver MEASURE meter.

o. Turn the receiver MEASURE switch to the AFC BAL position.

p. Place and hold the AFC DISABLE switch in the DISABLE position.

q. Adjust AFC BAL potentiometer R204 to the position at which a minimum indication less than 10 microamperes is obtained on the receiver MEASURE meter. Release to AFC DISABLE switch.

r. Connect Signal Generator TS–497/URR to the ANTENNA jack of the receiver. Using the AN/URM–80, adjust the TS–497/URR for an output of 200 microvolts at 161.750 mc.

s. Turn the receiver MEASURE switch to the SIG LEV position.

t. Adjust the RF AMP control of the B-band tuner to the position that produces a maximum indication on the receiver MEASURE meter.

360. Checking Metering Circuits

a. Vary the output frequency of the TS–497/URR from 161.250 to 162.250 mc. Check to see that the needle on the receiver FREQ DRIFT meter deflects from —20 to +20 microamperes as the signal generator frequency is

increased. This signifies that the receiver FREQ DRIFT meter is operating correctly.

b. Using the AN/URM–81, readjust the TS–497/URR to 161.750 mc.

c. Turn the receiver MEASURE switch to the OSC position.

d. Vary the B-band tuner RF AMP control from its extreme clockwise to its extreme counterclockwise position. Check that the receiver MEASURE meter reading remains on-scale for all positions of the RF AMP control.

e. Turn the receiver MEASURE switch to the MIX position.

f. Repeat the procedure outlined in *d* above.

g. Turn the receiver MEASURE switch to the SIG LEV position.

h. Tune the receiver to rf channel 124 using the procedure outlined in paragraphs 109 through 113*a*.

i. Adjust the signal generator for an output of 100 microvolts at 161.750 mc.

j. The receiver MEASURE meter should indicate 30 ± 5 μa.

k. Turn the receiver MEASURE switch to the 1ST LIM position.

l. The receiver MEASURE meter should indicate between 5 and 20 μa.

m. Turn the receiver MEASURE switch to the 2nd LIM position.

n. The receiver MEASURE meter should indicate between 20 and 50 μa.

o. Turn the transmitter MEASURE switch to the 1KC ADJ position and adjust the 1KC ADJ control for a reading of 0 db on the transmitter MEASURE meter.

p. Operate the transmitter and receiver MEASURE switches to the MTR CAL positions, and adjust ADJ METER potentiometer R260 for an indication of 0 db on the receiver MEASURE meter.

q. Turn the receiver MEASURE switch to the 1KC OUT position.

r. Disconnect the TS–497/URR from the receiver ANTENNA jack and connect Signal Generator AN/URM–70 to this jack.

s. Adjust the AN/URM–70 for a 1-kc modulated output of 161.750 mc.

t. Adjust the output of the AN/URM–70 to obtain indications on the receiver MEASURE meter as given in the table below. At each setting of the AN/URM–70, it should be possible to obtain corresponding indications on the SG–71/FCC, which is connected at the REC binding posts with the 600 OHMS–135 OHMS switch set at 135 OHMS.

Receiver MEASURE meter indication (db)	SG–71/FCC indication (dbm)
−3	7 ±1.5
−2	8 ±1.5
−1	9 ±1.5
0	10 ±1
+1	11 ±1.5
+2	12 ±1.5

u. Turn the receiver MEASURE switch to the 68KC OUT position.

v. Use Signal Generator SG–71/FCC to modulate the AN/URM–70 with 68 kc.

w. Adjust the output of the AN/URM–70 to obtain indications on the receiver MEASURE meter as given in the table below. Check the SG–71/FCC to see that the corresponding readings are obtained.

Receiver MEASURE meter indication (db)	SG–71/FCC indication (dbm)
−3	−3 ±1.5
−2	−2 ±1.5
−1	−1 ±1.5
0	0 ±1
+1	+1 ±1.5
+2	+2 ±1.5

x. Using Electronic Multimeter TS–505/U, check to see that the adjustable voltage between jacks J130 and J128 is +150 ±6 volts dc.

y. Turn the receiver MEASURE switch to the B+ position. The MEASURE meter should read 30 μa.

z. If normal indications as indicated in *b* through *y* above are obtained, the receiver MEASURE meter circuits are operating properly.

361. Final Test of Receiver B-Band Tuner

a. General. This final test is performed either to determine the quality of a repaired receiver B-band tuner or as a part of the overall final test of the receiver.

b. Pretest Procedure.

(1) Remove the tuner that is in the receiver.

(2) Connect cable assembly CX–2406/U between connector P5 of the B-band tuner and connector J108 of the receiver.

(3) Connect cable assembly CG–1091/U between connector P1 of the B-band tuner and connector J106 of the receiver.

(4) Connect cable assembly CG–1103/U between connector P4 of the B-band tuner and connector J107 of the receiver.

(5) Set the AFC control of the tuner to zero.

(6) Set the AFC-OFF-CAL switch of the receiver to OFF.

(7) Connect Signal Generator AN/URM–70 to the ANTENNA jack of the receiver.

(8) Set the MEASURE switch to the SIG LEV position.

c. Checking Dial Position.

(1) Turn the RF AMP control to the extreme clockwise position.

(2) Adjust the INDEX control until the movable index line is directly over the white index line on the panel. Point U should be under the hairline.

(3) If point U is not directly under the hairline, loosen the set screws on the dial, set point U under the hairline, and tighten the set screws.

d. Checking Tuning Range.

(1) Turn the POWER switch on the receiver to ON.

(2) Adjust the AN/URM–70 frequency to 99 mc and its output to 100 microvolts.

(3) Check to see that it is possible to adjust the RF AMP control near the red calibration mark below channel 1 so as to produce a simultaneous maximum reading on the MEASURE meter and a zero reading on the FREQ DRIFT meter.

(4) Adjust the AN/URM–70 frequency to 225.0 mc.

(5) Check to see that it is possible to adjust the RF AMP control near channel 250 to produce a simultaneous maximum reading on the MEASURE meter and a zero reading on the FREQ DRIFT meter.

(6) Turn the RF AMP control slightly clockwise from its setting in (5) above and note the FREQ DRIFT meter. The meter needle should deflect to the right.

(7) Turn the RF AMP control slightly counterclockwise. The FREQ DRIFT meter needle should deflect to the left.

e. Checking Tracking.

(1) Disconnect the AN/URM–70 from the ANTENNA jack. Connect cable assembly CG–1031/U between the CAL-OUT and ANTENNA jacks.

(2) Hold the AFC-OFF-CAL switch in the CAL position and adjust the RF AMP control near the low end of the band to produce a simultaneous maximum reading on the MEASURE meter and a zero reading on the FREQ DRIFT meter.

(3) With the RF AMP control set as in (2) above, check to see that it is possible to adjust the INDEX control to get the index line directly over the red calibration mark.

(4) Hold the AFC-OFF-CAL switch in the CAL position and adjust the RF AMP control near channel 240 to produce a simultaneous maximum reading on the MEASURE meter and a zero reading on the FREQ DRIFT meter.

(5) With the RF AMP dial set as in (4) above, check to see that it is possible to adjust the INDEX control to get the index line directly over the red calibration mark.

(6) Hold the AFC-OFF-CAL switch in the CAL position and adjust the RF AMP control near channel 130 to produce a simultaneous maximum reading on the MEASURE meter and a zero reading on the FREQ DRIFT meter.

(7) Release the AFC-OFF-CAL switch. With the RF AMP dial set as in (6) above, see that it is possible to adjust the INDEX control to get the index line directly over the red calibration mark.

(8) Disconnect the cable from the ANTENNA and CAL OUT jacks. Connect Signal Generator AN/URM–70 to the ANTENNA jack.

(9) Using the AN/URM–81, adjust the AN/URM–70 frequency to 161.750 mc and its output to 100 microvolts.

(10) With the INDEX line set as in (7) above, adjust the RF AMP control to produce a simultaneous maximum reading on the MEASURE meter and a zero reading on the FREQ DRIFT meter. The RF AMP dial should read channel 124 ±1 channel.

(11) If the conditions specified in (3), (5), (7), and (10) above are met, the tracking is satisfactory. If all the conditions were not met, perform the procedure outlined in *f* below.

f. Adjusting Tracking of Local Oscillator.

(1) If any adjustable parts of the receiver B-band tuner have been replaced, set each replacement part to the middle of its range.

(2) Disconnect the AN/URM–70 from the ANTENNA jack. Connect cable assembly CG–1031/U between the ANTENNA and CAL OUT jacks.

(3) Check to see that the AFC control is set to zero and the MEASURE switch is set to the SIG LEV position.

(4) To check that the local-oscillator tracking is properly adjusted, hold the AFC-OFF-CAL switch in the CAL position and turn the RF AMP control to each red calibration mark. At each setting of the RF AMP control, the FREQ DRIFT meter should read 0 ± 25 μa. If it does not, perform the procedures outlined in (5) through (13) below.

(5) Remove the cover from the tuner.

(6) Adjust the INDEX control so that the moveable index line is directly over the white line on the panel.

(7) Set the RF AMP control so that the red calibration mark near channel 175 is directly below the index line.

(8) Hold the AFC-OFF-CAL switch to the CAL position and adjust capacitor C21 (fig. 246) for a zero reading on the FREQ DRIFT meter. Note that the meter reads either side of zero as the capacitor is adjusted.

(9) Hold the AFC-OFF-CAL switch to the CAL position and adjust inductor L8 (fig. 245) for a maximum indication on the MEASURE meter.

(10) Set the RF AMP control so that the red calibration mark near channel 240 is directly below the index line.

(11) Hold the AFC-OFF-CAL switch in the CAL position and adjust inductor L9 for a zero reading on the FREQ DRIFT meter.

(12) Set the RF AMP control so that the red calibration mark near channel 20 is directly below the index line.

(13) Hold the AFC-OFF-CAL switch in the CAL position and adjust inductor L10 for a zero reading on the FREQ DRIFT meter. This completes the tracking adjustment of the local oscillator.

(14) Repeat the procedure outlined in (4) above.

g. Adjusting Tracking of Rf Amplifier.

(1) Disconnect the cable from the ANTENNA and CAL OUT jacks. Check to see that the AFC-OFF-CAL switch is at OFF and the MEASURE switch is at SIG LEV.

(2) Connect a coaxial T-connector to the ANTENNA jack. Connect Signal Generator SG–92/U at one end and Signal Generator TS–497/URR at the other end of the T-connector.

(3) Connect the vertical amplifier input of Oscilloscope OS–8A/U to terminal E3 of the tuner using a shielded lead. Terminal E3 is near the junction of resistor R3 and capacitor C14 (fig. 246).

(4) Connect the sweep output of the SG–92/U to the horizontal amplifier of the oscilloscope.

(5) Set the sweep rate of the SG–92/U to 60 cps, and its sweep width to 25 mc.

(6) To check that the rf amplifier tracking is properly adjusted, turn the RF AMP control until each channel listed in the chart below is directly under the index line. At each setting of the RF AMP control, adjust the frequency of the TS–497/URR for a zero reading on the FREQ DRIFT meter and a simultaneous maximum reading on the MEASURE meter. The output of the TS–497/URR will produce a marker pip on the oscilloscope. The marker pip represents the center of the if.

band. The height of the marker pip can be varied by adjusting the output voltage of the TS–497/URR. Adjust the SG–92/U frequency until a response curve is seen on the oscilloscope. At each channel setting, the response curve should be smooth, symmetrical, and single-peaked, and the marker pip should be between the two 3-db points on the response curve. If the response meets these requirements at each of the channels, the rf amplifier is tracking properly. If not, perform the procedures outlined in (7) through (11) below.

Rf channel	Approximate frequency of TS–497/URR and SG–92/U (mc)
1	100.25
42	120.75
83	141.25
125	162.25
167	183.25
208	203.75
250	224.75

(7) Adjust the INDEX control so that the movable index line is directly over the white line in the panel.

(8) Set the RF AMP control to channel 10 on the dial. Adjust the TS–497/URR frequency for a zero reading on the FREQ DRIFT meter and a simultaneous maximum reading on the MEASURE meter. Adjust the SG–92/U frequency to 104.75 mc. The frequency response curve on the oscilloscope should be smooth, single-peaked, and symmetrically centered about the marker pip. If it is not, adjust capacitors C13, C7, and C3 until the desired response curve is obtained.

(9) Set the RF AMP control to channel 250 on the dial. Adjust the TS–497/URR frequency for a zero reading on the FREQ DRIFT meter and a simultaneous maximum reading on the MEASURE meter. Adjust the SG–92/U frequency to 224.75 mc. If necessary, adjust inductors L7, L6, and L2 to obtain the desired response curve.

(10) Repeat the procedures outlined in (8) and (9) above until the desired response curve is obtained at both ends without the need for adjustments.

(11) Repeat the procedures outlined in (6) above.

h. Checking Bandwidth of Rf Amplifier.

(1) Check to see that the test setup is the same as that used in *g* above.

(2) Set the RF AMP control to channel 125 on the dial.

(3) Adjust the SG–92/U frequency to 162.25 mc.

(4) Adjust the TS–497/URR frequency so that the marker pip is positioned at the point on the left side of response curve having half the peak amplitude. Note the TS–497/URR frequency.

(5) Adjust the TS–497/URR frequency so that the marker pip is positioned at the half-amplitude point on the right side of the response curve. The difference between the TS–497/URR frequency now and that noted in (4) above should be between 2 and 8 mc.

i. Checking Tuner Gain.

(1) Disconnect the TS–497/URR, the SG–92/U, and the T-connector from the ANTENNA jack of the receiver.

(2) Connect the TS–497/URR to the ANTENNA jack of the receiver through a 6-db 50- to 50-ohm matching pad.

(3) Adjust the RF AMP control to channel 10.

(4) Adjust the TS–497/URR frequency for a maximum reading on the MEASURE meter in the SIG LEV position. Record the MEASURE meter reading and the output voltage of the TS–497/URR. Do not change the setting of the SQUELCH control.

(5) Disconnect cable assembly CG–113/U from connector J107 of the receiver. Disconnect the TS–497/URR from the ANTENNA jack and connect it through a 6-db matching pad (used to match the 50-ohm output impedance of the TS–497/URR to the 75-ohm input impedance of the if. amplifier) to connector J107.

(6) Adjust the TS–497/URR frequency to 30.0 mc. Adjust its output voltage to

obtain the same reading on the MEASURE meter as was obtained in (4) above. If the tuner gain is normal, the TS–497/URR output voltage now should be at least 5 times greater than that recorded in (4) above (+14-db gain).

(7) Adjust the RF AMP control to channel 250.

(8) Reconnect the TS–497/URR to the ANTENNA jack of the receiver through the 6-db, 50- to 50-ohm matching pad. Connect cable assembly CG–1103/U to connector J107 of the receiver.

(9) Adjust the TS–497/URR frequency for a maximum reading on the MEASURE meter. Adjust its output voltage to obtain the same reading on the MEASURE meter as was obtained in (4) above. If the tuner gain is normal, the TS–497/URR output voltage now should be no more than 3.2 times the output voltage obtained in (6) above (at least 10-db gain).

(10) If the gain, as determined in (6) or (9) above is low and the tracking is correct, check the tuner tubes and replace if faulty. Then repeat (3) through (9) above to see if the gain is normal.

j. Checking Image and Spurious Response.

(1) Disconnect output plug P108 of the if. amplifier from input jack J116 of the limiters. Connect plug P108 to one of the inputs of Panoramic Indicator IP–173/U.

(2) Connect Signal Generator TS–497/URR to the other input of the IP–173/U.

(3) Adjust the AN/URM–70 (connected to the ANTENNA jack of the receiver) to a frequency of 162.25 mc.

(4) Adjust the RF AMP control for a maximum indication on the MEASURE meter. Disregard the FREQ DRIFT meter.

(5) Adjust the TS–497/URR frequency near 35 mc and adjust the gain of the IP–173/U to obtain a centered pip with a +20-db amplitude on the IP–173/U. This pip represents the desired frequency. Note the output level on the AN/URM–70.

(6) Adjust the AN/URM–70 frequency to 222.25 mc. This is the image frequency at the setting of the RF AMP control obtained in (4) above. *Do not change the RF AMP control setting or the adjustments of the TS–497/URR and IP–173/U.*

(7) Increase the AN/URM–70 output by 20 db (a voltage increase of 10 times). If a pip is seen on the IP–173/U, it should not exceed —10 db. This would represent an image suppression of at least 50 db.

(8) Vary the AN/URM–70 frequency from 99 mc to 225 mc and observe the IP–173/U. No pips greater than —10 db should be seen except at 162.25 mc (the frequency to which the tuner is adjusted) and at 222.25 mc (the image frequency). The absence of pips greater than —15 db at all other frequencies indicates a spurious response rejection of at least 55 db.

k. Checking Local-Oscillator Radiation.

(1) Disconnect plug P108 from the IP–173/U, and reconnect the plug to jack J116.

(2) Disconnect the AN/URM–70 from the ANTENNA jack and reconnect it to the IP–173/U.

(3) Adjust the AN/URM–70 frequency to 192.25 mc. This is the frequency of the local oscillator when the receiver is tuned as in *j*(4) above. Adjust the AN/URM–70 output to 10,000 microvolts.

(4) Adjust the TS–497/URR frequency and the IP–173/U gain to obtain a centered pip of 0 db on the IP–173/U.

(5) Disconnect the AN/URM–70 from the IP–173/U. Connect the input of the IP–173/U to the ANTENNA jack of the receiver. If a pip is seen on the IP–173/U, it should not exceed 0 db. This would represent local-oscillator radiation not exceeding 8,000 microvolts.

l. Final Procedure.

(1) Turn the POWER switch to OFF.

(2) Disconnect all test equipment and maintenance cables.
(3) Reconnect the B-band tuner in the receiver.

362. Final Test of Receiver C-Band Tuner

a. General. This final test is performed either to determine the quality of a repaired receiver C-band tuner or as part of the overall final test of the receiver.

b. Pretest Procedure.

(1) Remove the tuner that is in the receiver.
(2) Connect cable assembly CX–2406/U between connector P5 of the C-band rf tuner and connector J108 of the receiver.
(3) Connect cable assembly CG–1091/U between connector P1 of the tuner and connector J106 of the receiver.
(4) Connect cable assembly CG–1103/U between connector P4 of the tuner and connector J107 of the receiver.
(5) Set the AFC control of the tuner to zero.
(6) Set the AFC switch of the receiver to OFF.
(7) Connect Signal Generator AN/URM–70 to the ANTENNA jack of the receiver.
(8) Set the MEASURE switch to the SIG LEV position.

c. Checking RF AMP Dial Position.

(1) Turn the RF AMP control to the extreme clockwise position.
(2) Adjust the AN/URM–70 frequency rectly below the hairline. If it is not, loosen the setscrews on the dial, set the alinement point directly below the hairline, and tighten the setscrews.

d. Checking Tuning Range.

(1) Turn the POWER switch on the receiver to ON.
(2) Adjust the AN/URM–70 frequency to 225.0 mc and its output to 100 microvolts (μv).
(3) Adjust the RF AMP control to channel 25.5 (half a channel below channel 26).
(4) Check to see that it is possible to adjust the OSC controls so as to produce a zero reading on the FREQ DRIFT meter at or very near the same setting that produces a maximum reading on the MEASURE meter.
(5) Adjust the AN/URM–70 frequency to 400.0 mc.
(6) Adjust the RF AMP control to channel 200.5.
(7) Repeat the step in (4) above.
(8) Adjust the AN/URM–70 frequency to 309.5 mc.
(9) Set the RF AMP and OSC controls to channel 110.
(10) Adjust the OSC controls for a zero reading on the FREQ DRIFT meter.
(11) Adjust the RF AMP control for a maximum reading on the MEASURE meter.
(12) Turn the AFC control clockwise to +5.
(13) Readjust the AN/URM–70 frequency to produce a zero reading on the FREQ DRIFT meter. The AN/URM–70 frequency should be between 306.0 and 309.1 mc.
(14) Turn the AFC control counterclockwise to —5.
(15) Readjust the AN/URM–70 frequency to produce a zero reading on the FREQ DRIFT meter. The AN/URM–70 frequency should be between 309.9 and 313.0 mc.
(16) Reset the AFC control to zero.

e. Checking Tracking.

(1) Adjust the AN/URM–70 frequency to 308.0 mc.
(2) Set the RF AMP and OSC controls to channel 108.5.
(3) Adjust the OSC controls for a zero reading on the FREQ DRIFT meter.
(4) Adjust the INDEX control so that the movable index line on the OSC dial is directly over the red calibration mark near channel 108.
(5) Adjust the AN/URM–70 frequency to 318.5 mc.
(6) Adjust the OSC controls for a zero reading on the FREQ DRIFT meter. If the local-oscillator tracking is normal, the index line will be set be-

tween channels 118.5 and 119.5 on the OSC dial.

(7) Adjust the RF AMP control for a maximum reading on the MEASURE meter. If the rf amplifiers are tracking normally, the index line will be set between channels 116 and 122.

(8) If the step in (4) above can be performed, and if the condition specified in (6) above is met, the tracking of the local oscillator is normal. If the condition specified in (7) above is met, the tracking of the rf amplifiers is satisfactory. If both the rf amplifier and local-oscillator tracking need adjustment, follow the procedures given in *f* and *g* below, in that order.

f. Adjusting Tracking of Rf Amplifier.

(1) Disconnect the AN/URM–70 from the ANTENNA jack.

(2) Connect cable assembly CG–1031/U between the ANTENNA and CAL OUT jacks.

(3) Check to see that the AFC control is set to zero, the AFC-OFF-CAL switch is at OFF, and the MEASURE switch is set to SIG LEV.

(4) If any adjustable parts of the receiver C-band tuner have been replaced, set each replacement part to the middle of its range.

(5) Set RF AMP and OSC controls to channel 31.5.

(6) Hold the AFC-OFF-CAL switch in the CAL position and adjust the OSC controls for a zero reading on the FREQ DRIFT meter and a simultaneous reading on the MEASURE meter. The MEASURE meter reading need not be maximum.

(7) Hold the AFC-OFF-CAL switch in the CAL position and adjust the OSC FINE control to each side of its setting as shown in (6) above. The FREQ DRIFT meter needle should swing to either side of zero. Reset the OSC FINE control for a zero reading on the FREQ DRIFT meter.

(8) Check the spacing of the plates of capacitor C8 (fig. 248) to see that it is approximately three thirty-seconds inch.

(9) Adjust capacitors C2, C6, and C9 for a maximum reading on the SIG LEV meter.

(10) Operate the MEASURE switch to the MIX position. Hold the AFC-OFF-CAL switch in the CAL position and adjust capacitor C32 for a maximum reading on the MEASURE meter.

(11) Operate the MEASURE switch to the SIG LEV position. Adjust inductor L13, in network Z1 (fig. 247), for a maximum reading on the MEASURE meter.

Note. See that the FREQ DRIFT meter indicates zero while inductor L13 is being adjusted.

(12) Set the RF AMP and OSC controls to channel 196.5.

(13) Repeat the steps given in (6) and (7) above.

(14) Hold the AFC-OFF-CAL switch in the CAL position and adjust inductors L4, L8, and L9 for a maximum reading on the MEASURE meter.

(15) Operate the MEASURE switch to the MIX position. Hold the AFC-OFF-CAL switch in the CAL position and adjust inductor L18 for a maximum reading on the MEASURE meter.

(16) Repeat the steps given in (5) through (15) above until the maximum readings are obtained at channels 31.5 and 196.5 without additional adjustments.

g. Adjusting Tracking of Local Oscillator.

(1) Adjust the INDEX control until the movable index line is directly in line with the white line on the panel.

(2) Set the RF AMP and OSC controls to channel 31.5.

(3) Hold the AFC-OFF-CAL switch in the CAL position and adjust the OSC controls for a zero reading on the FREQ DRIFT meter and a simultaneous reading on the MEASURE meter. After the OSC controls have been set, the index should be directly over the red calibration marker near channel 31.5.

(4) If the index is not as required, loosen the set screws on the OSC dial and

move the dial until the red marker is under the index line. Tighten the setscrews.

(5) Turn the RF AMP dial to channel 196.5. Set the OSC controls so that the red calibration mark near channel 196.5 is directly under the index line.

(6) Adjust capacitor C23, which is accessible through a hole in the left side of the tuner casting, for a zero reading on the FREQ DRIFT meter.

(7) Repeat the steps given in (2) and (3) above. If the red calibration mark is not directly below the index line, move the dial by turning the adjusting screw behind the dial.

(8) Repeat the steps in (5) and (6) above.

h. Checking Frequency Response and Bandwidth.

(1) Disconnect the cable from the ANTENNA and CAL OUT jacks. Check to see that the AFC-OFF-CAL switch is at OFF and the MEASURE switch is at SIG LEV.

(2) Connect a coaxial T-connector to the ANTENNA jack. Connect Signal Generator SG–92/U at one end and Signal Generator TS–497/URR at the other end of the T-connector.

(3) Using a shielded lead, connect the vertical amplifier input of Oscilloscope OS–8A/U to the terminal of capacitor C14. This capacitor is mounted next to capacitor C33 (fig. 248).

(4) Connect the sweep output of the SG–92/U to the horizontal amplifier of the oscilloscope.

(5) Set the sweep rate of the SG–92/U to 60 cps, and its sweep width to 25 mc.

(6) To check the frequency response, set the RF AMP and OSC controls to each channel listed in the chart below. At each channel setting, adjust the TS–497/URR frequency for a zero reading on the FREQ DRIFT meter. The output of the TS–497/URR will produce a marker pip on the oscilloscope. The marker pip represents the center of the if. band. The height of the marker pip can be varied by adjusting the output voltage of the TS–497/URR. Adjust the RF AMP control for a maximum reading on the MEASURE meter. Adjust the SG–92/U frequency until a frequency response curve is seen on the oscilloscope. At each channel setting, the response curve should be smooth, symmetrical, and single-peaked. If the response curve meets these requirements at each of the channels, the rf amplifier is tracking properly. If not, perform the procedure outlined in *f* above.

Rf channel	Approximate frequency of TS–497/URR and SG–92/U (mc)
26	225.5
50	249.5
80	279.5
110	309.5
140	339.5
170	369.5
200	399.5

(7) To check the bandwidth, repeat the step given in (6) above at channels 110 and 195. Perform the steps given in (8) and (9) below.

(8) Adjust the TS–497/URR frequency so that the marker pip is positioned at the point on the left side of the response curve having half the peak amplitude. Note the TS–497/URR frequency.

(9) Adjust the TS–497/URR frequency so that the marker pip is positioned at the half-amplitude point on the right side of the response curve. The difference between the TS–497/URR frequency now and that noted in (8) above should be between 2.5 and 10 mc.

i. Checking Tuner Gain.

(1) Disconnect the TS–497/URR, the SG–92/U, and the T-connector from the ANTENNA jack.

(2) Connect the TS–497/URR to the ANTENNA jack of the receiver through a 6-db 50- to 50-ohm matching pad.

(3) Adjust the RF AMP and OSC controls to channel 200.

(4) Adjust the TS–497/URR frequency

for a zero reading on the FREQ DRIFT meter and a simultaneous indication of the MEASURE meter.

(5) Adjust the RF AMP control for a maximum indication on the MEASURE meter. Record the MEASURE meter reading on the output voltage of the TS–497/URR.

(6) Disconnect cable assembly CG–1103/U from connector J107 of the receiver. Disconnect the TS–497/URR from the ANTENNA jack and connect it through a 6-db matching pad (used to match the 50-ohm output impedance of the TS–497/URR to the 75-ohm input impedance of the if. amplifier) to connector J107.

(7) Adjust the TS–497/URR frequency to 30.0 mc. Adjust its output voltage to obtain the same reading on the MEASURE meter as obtained by procedure in (5) above. If the tuner gain is normal, the TS–497/URR output voltage now should be at least 5.6 times greater than that recorded in (5) above (+15-db gain).

(8) Disconnect the TS–497/URR from connector J107. Reconnect Cable Assembly CG–1103/U to connector J107.

j. Checking Image and Spurious Response.

(1) Disconnect output plug P108 of the if. amplifier from input jack J116 of the limiters. Connect plug P108 to one of the inputs of Panoramic Indicator IP–173/U.

(2) Connect Signal Generator TS–497/URR to the other input of the IP–173/U.

(3) Connect the AN/URM–70 directly to the ANTENNA jack of the receiver. Adjust its frequency to 309.5 mc.

(4) Set the RF AMP and OSC controls to channel 110. Adjust the OSC FINE and RF AMP controls for a maximum indication of the MEASURE meter. Disregard the FREQ DRIFT meter.

(5) Adjust the TS–497/URR frequency near 35 mc and the gain of the IP–173/U to obtain a centered pip with a +20-db amplitude on the IP–173/U. This pip represents the desired frequency. Note the output level on Signal Generator AN/URM–70.

(6) Adjust the AN/URM–70 frequency to 249.5 mc. This is the image frequency at the setting of the RF AMP and OSC controls noted in (4) above. *Do not change the setting of the RF AMP and OSC controls or the adjustments of the AN/URM–70 and IP–173/U.*

(7) Increase the AN/URM–70 output by 20 db (a voltage increase of 10 times). If a pip is seen on the IP–173/U, it should not exceed —10 db. This would represent an image suppression of at least 50 db.

(8) Vary the AN–URM/70 frequency from 225 to 400 mc and observe the IP–173/U. No pips exceeding —10 db should be seen except at 309.5 mc (the frequency to which the tuner is adjusted). The absence of pips exceeding —10 db at all other frequencies indicates a spurious response rejection of at least 50 db.

k. Checking Local-Oscillator Radiation.

(1) Disconnect plug P108 from the IP–173/U, and reconnect the plug to jack J116.

(2) Disconnect the AN/URM–70 from the ANTENNA jack and reconnect it to the IP–173/U.

(3) Adjust the AN/URM–70 frequency to 279.5 mc. This is the local-oscillator frequency when the tuner is adjusted as in *j* above. Adjust the AN/URM–70 output to 8,000 microvolts.

(4) Adjust the TS–497/URR frequency and the IP–173/U gain to obtain a centered pip of 0 db on the IU–173/U.

(5) Disconnect the AN/URM–70 from the IP–173/U. Connect the input of the IP–173/U to the ANTENNA jack of the receiver. If a pip is seen on the IP–173/U, it should not exceed 0 db. This would represent local-oscillator radiation not exceeding 8,000 μv.

l. Final Procedure.

(1) Turn the POWER switch to OFF.

(2) Disconnect all test equipment and maintenance cables.

(3) If the overall test of the receiver is

to be performed, install a B-band tuner in the receiver.

363. Checking Afc Pull-In Range

a. Check to see that a B-band tuner is installed in the receiver.

b. Connect Signal Generator TS–497/URR to the ANTENNA jack of the receiver through the 50- to 50-ohm, 6-db pad. Adjust the TS–497/URR frequency to 100.250 and its output to 100 microvolts. Use the AN/URM–80.

c. Set the RF AMP control to channel 1 with the AFC-OFF-CAL switch at OFF and the AFC control at zero. Adjust the RF AMP control for a zero reading on the FREQ DRIFT meter.

d. Set the AFC-OFF-CAL switch in the AFC position.

e. Adjust the output frequency of the TS–497/URR to 100.700 mc. Use the AN/URM–80. Check to see that the indication of the receiver FREQ DRIFT meter returns to 0. This indicates a pull-in range of 450 kc.

f. Install a C-band rf tuner in the receiver; change the frequency of the TS–497/URR to 225.50 mc, and with the receiver AFC-OFF-CAL switch in the OFF position adjust the tuner for a reading of 0 on the FREQ DRIFT meter. Adjust the output frequency of the TS–497/URR to 225.10 mc.

g. Check to see that the indication of the receiver FREQ DRIFT meter returns to 0. This indicates a pull-in range of 900 mc.

h. Adjust the output frequency of the TS–497/URR to 225.90 and check the afc pull-in range as noted in *g* above.

i. Replace the B-band rf tuner in the receiver.

364. Checking Squelch and Alarm Circuits

a. Check to see that the SQUELCH control is adjusted to its maximum clockwise position.

b. Check to see that the receiver ALARM lamp is extinguished.

c. Check to see that the receiver buzzer sounds when the receiver ALARM switch is in the REV position and is silenced when the receiver ALARM switch is in the NOR position.

d. Disconnect the TS–497/URR and connect the AN/URM–70 to the receiver ANTENNA jack. Adjust the output of the AN/URM–70 to 6 microvolts at 161.750 mc.

e. Adjust the SQUELCH control to a position at which the receiver is squelched. Squelching is indicated by lighting of the receiver ALARM lamp, sounding of the alarm buzzer and quieting of noise in the receiver handset.

f. Adjust the SQUELCH control to its maximum clockwise position.

g. Adjust the output of the AN/URM–70 to 250 microvolts.

h. Adjust the SQUELCH control to the maximum clockwise position. The receiver should become squelched.

i. Place the receiver ALARM switch in the REV position to silence the buzzer.

365. Checking Receiver Output and Base-Band Frequency Response

a. Checking Receiver Output.

(1) Adjust the controls of the AN/URM–70 for an output of 161.750 mc modulated by +16 decibels referred to milliwatt in 600 ohms (dbm) of 24 kc with a peak deviation of 85 kc. Use SG–71/FCC to modulate the AN/URM–70.

(2) Check to see that the RF AMP control is adjusted to the rf channel 124.

(3) Adjust the rf output of the AN/URM–70 to 1,000 μv.

(4) Check to see that the 135-ohm input terminals on Transmission Measuring Set TS–569/FT are connected to the REC binding posts and that the 600 OHMS–135 OHMS switch is set at 135 OHMS. Adjust the OUTPUT ADJ control for an indication of 16 $\pm$.5 dbm on the TS–569/FT.

(5) Check to see that the OUTPUT ADJ control is set to a position between 12 and 17. This is the normal setting for this control.

(6) Connect the REC binding posts to the 600-ohm input of the TS–569/FT.

(7) Operate the 600 OHMS–135 OHMS switch to the 600 OHMS position.

(8) Check to see that the indication on the TS–569/FT is 6 $\pm$1 dbm. This is a normal indication.

(9) Reduce the output from the AN/URM/70 from 1,000 μv to 6μv.

(10) The indication of the TS–569/FT should not change by more than .5 db.

(11) Vary the input ac voltage to the re-

ceiver from 103.5 to 126.5 volts ac. Check to see that the indication on the TS–569/U does not vary more than 1 db as the ac input voltage is varied.

b. Checking Base-Band Frequency Response.

(1) Operate the 600 OHMS–135 OHMS switch to the 135 OHMS position.

(2) Connect the REC binding posts to the 135-ohm input of Transmission Measuring Set TS–569/FT.

(3) Adjust Signal Generator SG–71/FCC to a frequency of 1 kc.

(4) Adjust the AN/URM–70 for an output of 161.750 mc modulated with a maximum deviation of 20 kc.

(5) Adjust the rf output of the AN/URM–70 to 10,000 μv.

(6) Note the indication on the transmission measuring set. This is the reference value.

(7) Adjust the frequency of the audio oscillator to 4 kc, maintaining a 20-kc deviation of the AN/URM–70.

(8) Note the indication of the TS–569/FT. The indication should differ from the reference value ((6) above) by the amount specified in the chart below.

(9) Repeat the procedure outlined in (7) and (8) above, substituting each set of values of the chart below in turn.

(10) Vary the modulation of the AN/URM–70 from 250 to 4,000 cps. The indication of the transmission measuring set should not vary more than +1.4 to —1.9 db from the indication obtained in (6) above.

Audio oscillator frequency (kc)	Indication of TS–569/FT (db)
1	Reference
0.250	.4 to −.9
4.0	− .10 ±1
8.0	− .30 ±1
16.0	− .82 ±1
24.0	−1.45 ±1
32.0	−2.25 ±1
48.0	−3.95 ±1
68.0	−5.60 ±1

366. Checking Order Wire

a. Checking Output of Phone Amplifier Circuit. Follow the procedure outlined in (1) through (14) below to see that the input circuits to the receiver handset are operating satisfactorily.

(1) Connect the AN/URM–70 and a 250-ohm resistor in parallel between terminals A and B of the HANDSET jack.

(2) Connect one end of a 60-ohm resistor to terminal C of the HANDSET jack.

(3) Connect a 10-ohm resistor between the free end of the 60-ohm resistor and terminal E of the HANDSET jack.

(4) Connect a 10,000-ohm resistor to terminals B and D of the TRANSMITTER jack of the receiver.

(5) Connect a 600-ohm resistor to terminals C and D of TRANSMITTER jack of receiver.

(6) Connect —12 volts to terminal K of the TRANSMITTER jack of the receiver as shown in (*a*) through (*c*) below.

(*a*) Connect a lead from terminal V of the TRANSMITTER jack of Power Supply PP–685/TRC to terminal K of the TRANSMITTER jack of the receiver.

(*b*) Connect a lead from terminal N of the TRANSMITTER jack of Power Supply PP–685/TRC to terminal D of the TRANSMITTER jack of the receiver.

(*c*) Connect the power supply to a source of ac power and turn the 115V AC circuit breaker to the ON position.

(7) Connect the receiver to a source of ac power.

(8) Place the POWER switch in the ON position and adjust the receiver for operation on the B-band, channel 250 (pars. 109–113*a*).

(9) Connect Transmission Measuring Set TS–569/FT to the REC CABLE CONNECTION terminals so that it will match 135 ohms.

(10) Connect Signal Generator AN/URM–70 to the ANTENNA jack of the receiver.

(11) Adjust the frequency of the signal generator to 224.750 mc, its output to 15,000 μv, and its frequency deviation to 39 kc.

(12) Connect the SG–71/FCC to the external modulation jacks of the AN/URM–70.

(13) Adjust the frequency of the audio oscillator to 1 kc, and the frequency deviation of the AN/URM–70 to 39 kc.

(14) Adjust the OUTPUT ADJ control of the receiver so that the transmission measuring set reads +10 dbm. The AN/URM–70 at the HANDSET jack should read between .062 and .134 volt.

(15) Disconnect the rf signal generator from the receiver and connect the audio oscillator shunted by the ME–30A/U across terminals C and D of TRANSMITTER jack J135.

(16) Vary the frequency of the audio oscillator to the values shown in the table below, adjusting its output to obtain a reading of +10 dbm on the SG–71/FCC at each frequency. The readings of the ME–30A/U for each frequency should be as shown in the chart below.

Audio oscillator frequency (cps)	Indication on ME–30A/U (db)
1,000	.39 volt ±3 db (reference).
250	Ref 0 db.
	−4 db.
2,000	Ref −4 db.
	−8 db.
4,000	Ref minus at least 30 db.

b. Checking Microphone Circuit of Order Wire. Use an audio oscillator as a dummy microphone to check the microphone circuit of the receiver.

(1) Disconnect the audio oscillator from the TRANSMITTER jack and connect it across the 10-ohm resistor at the HANDSET jack so that it will act as a dummy microphone. Connect Electronic Multimeter TS–505/U as an ac voltmeter across the 10-ohm resistor.

(2) Adjust the frequency of the audio oscillator to 1 kc and its output to .22 volt as indicated on the TS–505/U. The transmission measuring set should indicate 0 ±2 dbm.

(3) Disconnect the AN/URM–70 from terminals C and D of the TRANSMITTER and connect it to terminals B and D of the TRANSMITTER jack of the receiver. It should read between .62 and .98 volt, indicating that the normal microphone voltage appears at the TRANSMITTER jack.

(4) Check the frequency response of the receiver to a varying microphone voltage as shown in (*a*) through (*c*) below.

(*a*) Vary the frequency of the audio oscillator from 250 to 1,000 cps. Keep the SG–71/FCC output constant at .22 volt. The reading on the transmission measuring set should vary from 9 dbm to +2 dbm as the frequency is increased.

(*b*) Vary the frequency of the audio oscillator from 1,000 cps to 2,000 cps. Keep the SG–71/FCC output constant at .22 volt. The reading on the transmission measuring set should decrease by .5 to 4.5 dbm as the frequency is increased.

(*c*) Adjust the frequency of the audio oscillator to 4,000 cps. The transmission measuring set should read −28 dbm or less.

(5) Set the frequency of the audio oscillator to 1 kc; adjust its output to get a reading of .22 volt on the TS–505/U. Note the reading on the TS–569/FT.

(6) Increase the output of the audio oscillator to make the TS–505/U read .69 volt. The reading on the TS–569/FT should be between 6 dbm to 10 dbm greater than that used as indicated in (5) above.

(7) Increase the output of the audio oscillator to make the TS–505/U read 2.2 volts. The TS–569/FT should read between 7.4 dbm to 11.4 dbm higher than indicated in (5) above.

(8) Adjust the output of the audio oscillator to make the TS–505/U read .22 volt. Measure the voltage at terminals A and B of the HANDSET jack. The meter should show a reading between .0137 and .056 volt.

c. Checking Order-Wire Circuit for Crosstalk.

(1) Adjust the output of the audio oscil-

lator so that the transmission measuring set reads +10 dbm.

(2) Vary the frequency of the audio oscillator and check to see that the AN/URM–70 at the TRANSMITTER jack reads less than .078 volt when the frequency is less than 4,000 cps and less than .025 volt for frequencies between 4,000 cps and 68 kc.

d. Checking Sensitivity of Ringer.

(1) Adjust the audio oscillator frequency to 1,600 cps, its output impedance to 135 ohms, and its output voltage so that the transmission measuring set reads 0 dbm. The RING lamp should light and the buzzer should sound.

(2) Disconnect the audio oscillator from the HANDSET jack and connect it and the AN/URM–70 to terminals C and D of the TRANSMITTER jack of the receiver.

(3) Adjust the frequency of the audio oscillator to 1,600 cps and increase its output. The RING lamp should light and the buzzer should sound when the AN/URM–70 reads less than .123 volt.

(4) Disconnect the audio oscillator from the TRANSMITTER jack and connect the AN/URM–70 between terminals B and D of the jack.

e. Checking 1,600-Cps Oscillator.

(1) Hold the TALK-RING switch on the RING position. The transmission measuring set should read +10 ±4 dbm, the AN/URM–70 should read between 1.55 and 3.82 volts, the RING lamp should light and the buzzer should sound.

(2) Release the TALK-RING switch to the TALK position.

(3) Remove the test equipment from the HANDSET jack and connect the handset.

(4) Talk into the handset in a normal voice. The RING lamp should not light and the buzzer should not sound.

367. Final Test of Receiver for Distortion

After the final tests to check the receiver for operation, follow the procedure outlined in *a* below to test the receiver for excessive distortion. If the test indicates that the receiver distortion is excessive, follow the procedure outlined in *b* below to determine the cause of the distortion and eliminate it.

a. Testing for Distortion.

(1) Adjust the receiver for operation on channel 250 in the B-band (pars. 109–113*a*).

(2) Connect Signal Generator AN/URM–70 to the ANTENNA jack (fig. 264).

(3) Adjust the frequency of the AN/URM–70 to 224.750 mc and its output to 15,000 μv.

(4) Readjust the frequency of the AN/URM–70 if necessary, so that the FREQ DRIFT meter of the receiver reads 0.

(5) Place the AFC-OFF-CAL switch of the receiver in the AFC position.

(6) Connect the SG–71/FCC to terminals 1 and 2 of a 5-kc filter.

(7) Adjust the frequency of the audio oscillator to 5 kc and the impedance to 600 ohms.

(8) Connect a 600-ohm terminating resistor between terminals 3 and 4 of the 5-kc filter.

(9) Connect terminals 3 and 4 of the 5-kc filter to the external modulation terminals of the AN/URM–70. Adjust the output of the audio oscillator to produce a frequency deviation of 39 kc in the AN/URM–70.

(10) Disconnect the 135-ohm terminating resistor from the REC binding posts of the receiver if it is still connected from a previous test.

(11) Connect the REC CABLE CONNECTION terminals of the receiver to the ATTENUATOR IN jacks of transmission measuring set.

(12) Set the 600 OHMS-135 OHMS switch of the receiver to the 135 OHMS position.

(13) Adjust the OUTPUT ADJ control of the receiver for an indication of +6 ±.5 db on the transmission measuring set.

(14) Transfer the connections from the ATTENUATOR IN jacks of the transmission measuring set to the 135-ohm side of a repeating coil of the measuring set.

(15) Interconnect the ground terminals of the radio receiver and the measuring set with the shield of the interconnecting cable.

(16) Connect the 600-ohm side of the repeating coil of the transmission measuring set to terminals 1 and 2 of a 10-kc filter.

(17) Connect a 600-ohm terminating resistor between terminals 3 and 4 of the 10-kc filter.

(18) Connect Voltmeter ME–30A/U to terminals 3 and 4 of the output filter. If the distortion of the receiver is not excessive, the ME–30A/U will read .0022 volt (7 db on the .01 scale) or less.

(19) Repeat the procedure given in (1) through (18) above with the receiver adjusted for channel 1 and the AN/URM–70 frequency to 100.250 mc.

(20) Repeat the procedures given in (1) through (19) above with the receiver adjusted for channel 120 and the AN/URM–70 frequency to 159.750 mc.

b. Locating Cause of Distortion. If the procedure outlined in *a* above indicated abnormal readings, follow the procedures outlined in (1) through (5) below.

(1) Disconnect the input filter from the modulation jack of the AN/URM–70 If the receiver is quieting properly, the reading of the vacuum-tube voltmeter (vtvm) should drop to zero, or less, on the .01 scale. If the reading does not drop sufficiently, follow the instructions given in (2) below.

(2) Increase the rf output of Signal Generator AN/URM–70.

(3) Note the vtvm reading. If adjusting the output of the signal generator has no effect on the vtvm reading, there is an open connection between the signal generator and the receiver. If the reading decreases but does not drop to .001 volt with an increased signal, random noise or oscillations are present in the receiver.

(4) If the receiver distortion persists, locate the plug-in assembly that is responsible for the trouble by substituting plug-in assemblies from a spare receiver that has already passed the distortion test (*a* above). Distortion is usually caused by a misalignment of the if. amplifier, limiter, or discriminator circuits or the if. circuit of the tuner.

(5) When the faulty assembly is located, check the alignment by referring to the final test procedure for that assembly and perform signal substitution and voltage and resistance measurements if necessary.

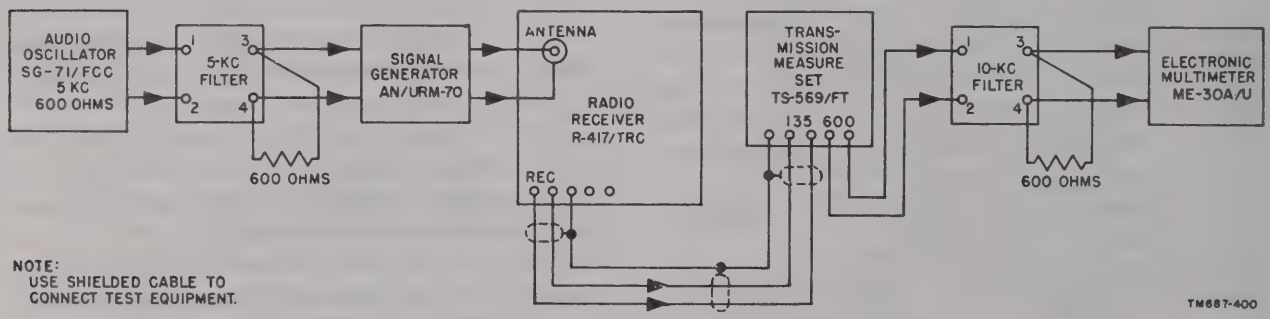

Figure 264. Test arrangement, receiver distortion test.

Section V. FINAL TEST OF TRANSMITTER AND POWER SUPPLY PP–685/TRC

368. General Instructions for Transmitter and Power Supply Final Testing

This section is intended as a guide in determining the quality of a repaired transmitter or power supply. The minimum test requirements outlined in paragraphs 370 through 378 may be performed by maintenance personnel with adequate test equipment and the necessary skills. Repaired equipment meeting these requirements will furnish uniformly satisfactory operation. The procedures must be performed in the order given.

369. Test Equipment Required for Final Testing of Transmitter

Quantity	Test equipment	Technical manual
1	Signal Generator SG–71/FCC	TM 11–5088.
1	Signal Generator AN/URM–70	
1	Voltmeter ME–30A/U[a]	
2 ft	RG–14A/U	
400 ft	RG–21/U	
1	Transmission Measuring Set TS–569/FT.	TM 11–2049.
1	Band-pass filter, 5-kc, band pass.	
1	Band-pass filter, 10-kc, band pass.	

[a] Electronic Multimeter ME–6/U may be used if Voltmeter ME–30A/U is not available. TM 11–5549 covers the ME–6/U.

370. Final Test of Power Supply PP–685/TRC

To check Power Supply PP–685/TRC follow the procedure outlined in *a* through *h* below.

a. Preliminary Test Procedure.

(1) Interconnect the power supply to be tested and a Radio Transmitter T–302/TRC, which is known to be in good operating condition. Use cable assembly CX–2253/U (par. 71).

(2) Remove the power supply from its transit case and tape the interlock plunger switch (S4) as the lower right rear of the chassis to the power-supply chassis.

(3) Connect the 115V AC INPUT jack on the power supply to a regulated source of 115 volts ac.

(4) Turn the source of regulated 115 volts ac on, and turn the 115V AC, 150V DC, and 750V DC switches of the power supply to the ON positions.

Caution: Dangerous voltages are present in the power supply when it is operating. Care should be taken when making readings.

Output being measured	Terminals across which measurements are made	Normal indications
115 volts ac	One terminal of fuse F4 and terminal 2 of transformer T5.	115 ±3 volts ac.
2.5 volts ac heater.	Terminals 5 and 6 of transformer T5.	2.9 ±.1 volts ac.
6.3 volts ac heater.	Terminals 4 and 3 of transformer T5.	6.7 ±.2 volts ac.
6.3 volts ac heater.	Terminals 4A and 3A of transformer T5.	6.7 ±.2 volts ac.
−12 volts dc	Terminals 1 and 3 of rectifier CR1	−12 ±1 volts dc.

b. Checking A-c and —12-volt Outputs.

(1) Using Electronic Multimeter TS–505/U, make voltage measurements at the terminals shown in the table above. An indication which varies more than 1 percent beyond the normal limits signifies that the power supply is defective.

Note. Wait at least 2 minutes before making any measurements.

(2) Using Voltmeter ME–30A/U, check to see that the ripple voltage across terminals 1 and 3 of rectifier CRI does not exceed 500 μv.

Note. When using Voltmeter ME–30A/U to make measurements, connect the ME–30A/U through a dc blocking .1-μf capacitor.

c. Checking +150- and +250-Volt Outputs. Use Voltmeter ME–30A/U and Electronic Multimeter TS–505/U. Make voltage measurements at the terminals shown in the table below. An indication which varies more than 1 percent beyond the normal limits signifies that the power supply is defective.

Output being measured	Terminals across which measurements are made	Control varied	Normal output voltage indication	Normal ripple voltage indicator
+150 volts dc	+150V jack J14 and −150V jack J5.	Vary 105V ADJ potentiometer R15 from the extreme counterclockwise position to the extreme clockwise position.	140 to 160 volts dc.	
		Adjust this control for an output of +150 volts dc.		Less than 10 millivolts.

Output being measured	Terminals across which measurements are made	Control varied	Normal output voltage indication	Normal ripple voltage indicator
+250 volts dc	+250 VOLTS jack J16 and −150V jack J5.	Set 150V ADJ potentiometer R15 for an output of +150 volts dc across jacks J14 and J5.	220 to 260 volts dc	Less than 70 millivolts.

d. Checking +750-Volt Output. Adjust overcurrent trip potentiometer R1 to its extreme clockwise position. Connect Voltmeter ME–30A/U through a .1-μf capacitor in parallel with Electronic Multimeter TS–505/U between terminal 3 of rectifier CR1 and the cap connection of tube V3. Adjust the position of the 750V ADJ switch as shown in the table below. An indication which varies more than 1 percent from the normal indication signifies that the power supply is defective.

750V ADJ switch position	Normal indication	
	Output voltage (dc)	Ripple voltage (less than)
1	320 ±20	5 volts.
2	670 ±25	10 volts.
3	730 ±30	10 volts.
4	780 ±30	15 volts.
5	830 ±35	15 volts.
6	875 ±35	15 volts.

e. 750V ADJ Switch. After completing the measurements in *d* above, set the 750V ADJ switch to a position which gives an indication of 750 volts ±30 volts dc between terminal 3 of rectifier CR1 and the cap connection of tube V3.

f. Checking +200- to +350-Volt Output. Connect Electronic Multimeter TS–505/U and Voltmeter ME–30A/U across pin 4 of tube V3 and terminal 3 of rectifier CR1. Vary the SCREEN VOLTS ADJ control on the transmitter from the extreme counterclockwise position to the extreme clockwise position. The indication on the TS–505/U should vary from 200 to 350 volts as the SCREEN VOLTS ADJ control is varied. The indication on the ME–30A/U should not exceed 2 volts. Set the SCREEN VOLTS ADJ control for an output of 275 volts.

g. Checking Meters.

(1) AC VOLTS meter M1 should indicate within ±4 volts of the exact input ac voltage.

(2) Set the DC TEST switch to the 150 position. The indication on the DC VOLTS meter should be 150 ±7.5 volts.

(3) Place the DC TEST switch in the 750 position. The indication on the DC VOLTS meter should be the same as that obtained in *e* above, ±18 volts.

(4) Place the DC TEST switch in the 275 position. The indication on the DC VOLTS meter should be 275 ±18 volts.

h. Checking Overcurrent Trip Adjustment. Turn the DC TEST switch to the 750 position. Adjust potentiometer R1 in a counterclockwise direction to the first position at which the indication on the DC VOLTS meter drops to 0. Turn the 115V AC switch OFF and turn R1 clockwise one-half a turn. Turn the 115V AC switch ON and check the DC VOLTS meter for normal indication.

i. Final Procedures. Turn the regulated source of 115 volts ac off, remove the tape securing the interlock plunger, and refasten the power supply in its transit case. Disconnect all cables from the power supply.

371. Rf Output Power Test

To test the rf output power of the transmitter, follow the procedures as outlined in *a* through *g* below.

a. Equip the transmitter with B-band rf tuner, dummy filter, and Wattmeter ME–82/U.

b. Connect the power supply. Use the autotransformer so that it will be possible to adjust the line voltage to 126.5 ±2 volts, 115 ±2 volts, and 103.5 ±2 volts.

c. Adjust line voltage for normal operation —that is, 115 ±2 volts.

d. Adjust the transmitter in accordance with the tuning procedure for normal operation as described in paragraph 105*a*. The output power as measured by the wattmeter should be a minimum of 70 watts.

e. Decrease the input line voltage by 10 percent; that is, adjust the line voltage input to 103.5 volts. No retuning or readjusting of the transmitter should be necessary, and the wattmeter should read a minimum of 35 watts 5 minutes after the line voltage was reduced.

f. Increase the input line voltage 10 percent above normal; that is, increase the line voltage to 126.5 volts. No retuning or readjusting of the transmitter should be necessary, and the wattmeter should read a minimum of 70 watts 5 minutes after the line voltage was increased.

g. Replace the B-band r-f tuner with the C-band r-f tuner and repeat the steps in *d* through *f* above.

372. Automatic Frequency Control Test

To test the afc of the transmitter, follow the procedures as outlined in *a* through *c* below.

a. Adjust the transmitter in accordance with the tuning procedure for normal operation as described in paragraph 105*a*. The AFC control should be positioned to 0.

b. Manually rotate the AFC control to the +5 position. The FREQ DRIFT meter deflection should be upscale. Release the AFC control. It should return automatically to 0 and the FREQ DRIFT meter indication should return to 0 ± 2 μa.

c. Manually rotate the AFC control to the −5 position. The FREQ DRIFT meter deflection should be downscale. Release the AFC control. It should return automatically to 0 and the FREQ DRIFT meter indication should return to 0 ± 2 μa.

373. Low-Power Alarm Test

To test the low-power alarm in the transmitter, follow the procedure as outlined in *a* through *i* below.

a. Adjust the transmitter in accordance with the tuning procedure for normal operation as described in paragraph 105*a*.

b. Turn the ALARM switch to the NOR position.

c. Turn the 750V ADJ switch for rf output power levels indicated by Wattmeter ME–82/U, ranging from 70 watts to approximately 30 watts. The alarm should remain silent.

d. Rotate the 750V ADJ switch for rf output power levels below 30 watts. The LOW PWR ALARM lamp should glow and the buzzer should sound.

e. Turn the ALARM switch to the REV position.

f. Adjust the 750V ADJ switch for rf output power levels ranging from normal (70 watts) to approximately 30 watts. The LOW PWR ALARM lamp should not be lighted and the buzzer should sound.

g. Adjust rf output power below 30 watts. The LOW PWR ALARM lamp should glow and the buzzer should be silent.

h. Turn the ALARM switch to the OFF position.

i. Adjust the 750V ADJ switch for rf output power levels from 50 watts to 5 watts. The buzzer should be silenced for all conditions. The lamp should be lighted for all output power levels below approximately 30 watts.

374. Metering Test

To test the metering of the transmitter, follow the procedure as outlined in *a* through *o* below.

a. Equip the transmitter with the C-band rf tuner.

b. Adjust the transmitter in accordance with the tuning procedure for normal operation, as described in paragraph 105*a*, in a C-band rf channel. Set the INPUT ADJ control to position 15.

c. Connect the SG–71/FCC to terminals H and J of connector J101. Adjust the output impedance of the SG–71/FCC to 135 ohms.

d. Adjust the audio oscillator output frequency to 1,000 cps.

e. Turn the MEASURE switch to the 1KC IN position. Adjust the output level of the audio oscillator to obtain a reading of 0 on the MEASURE meter. Check the output of the audio oscillator with Transmission Measuring Set TS–569/FT to see that the output is within 10 db ± 1.5 db.

f. Adjust the output frequency of the audio oscillator to 68 kc.

g. Turn the MEASURE switch to the 68KC IN position. Adjust the output level of the audio oscillator to obtain a reading of 0 on the MEASURE meter. Check the output of the audio oscillator with Transmission Measuring Set TS–569/FT to see that the output is within 0 dbm ± 1.5 db.

h. Adjust the output frequency of the audio oscillator to 1,000 cps.

i. Turn the MEASURE switch to the MOD 1KC IN position.

j. Adjust the output level of the audio oscillator so that the MEASURE meter will read 2 db.

k. The output of the audio oscillator should be within ±1.7 db of the reading noted in *e* above.

l. Adjust the audio oscillator frequency output to 68 kc.

m. Turn the MEASURE switch to the MOD 68KC IN position.

n. Adjust the voltage output of the audio oscillator for a 2-db reading on the MEASURE meter.

o. The output of the audio oscillator should be within ±1.7 db of that noted in *g* above.

375. Base Rf Oscillator Frequency Deviation Test

To test the frequency deviation of the base rf oscillator, the receiver is used first to demodulate an fm signal of known deviation and then to demodulate the fm signal picked up from the transmitter. A comparison of the outputs of the receiver under these conditions will provide the means of determining the frequency deviation produced in the transmitter. The procedure is outlined in *a* through *o* below.

a. Equip the transmitter and the receiver with B-band tuners and tune both units to channel 250.

b. Connect Signal Generator AN/URM–70 to the ANTENNA jack of the receiver, and adjust the output of the signal generator to 15,000 μv. Tune the AN/URM–70 to 224.75 mc.

c. Connect the SG–71/FCC with its output impedance set at 135 ohms to the external modulation jack of the signal generator.

d. Adjust the output frequency of the audio oscillator to 1,000 cps and the output signal level to 16 dbm. Use Transmission Measuring Set TS–569/FT.

e. Turn OUTPUT ADJ control of the receiver to 19.

f. Turn the MEASURE switch of the receiver to the SIG LEV position, and record the MEASURE meter reading.

g. Connect Transmission Measuring Set TS–569/FT to the receiver REC terminals.

h. Adjust the signal generator for a frequency deviation of 78 kc and note the reading on the transmission measuring set.

i. Disconnect the signal generator and the audio oscillator from the receiver.

j. Couple the transmitter to the receiver as described in paragraph 378.

k. Connect the audio oscillator to terminals H and J of connector J101 of the transmitter. Set the output impedance of the oscillator to 135 ohms.

l. Adjust the audio oscillator output frequency to 1,000 cps.

m. Adjust the INPUT ADJ control to 15.

n. Adjust the output level of the audio oscillator: between 14 and 18 dbm. This should produce the same reading on the transmission measuring set as noted in *h* above.

o. For C-band operation, equip the transmitter with the C-band rf tuner and repeat steps given in *a* through *n* above. The peak oscillator frequency deviation should be 124 kc for C-band operation. Tune the transmitter and receiver to the 200 C channel in the procedure given in *a* above. In the procedure given in *b* above, set the frequency of the AN/URM–70 to 399.500 mc at 15,000 microvolts.

376. Transmitter Order-Wire Control Channel Test

To test the order-wire control channel of the transmitter, follow the procedure as outlined in *a* through *g* below.

a. Adjust the transmitter in accordance with the tuning procedure for normal operation as described in paragraph 105*a*.

Note. The 750V DC switch may be off.

b. Connect the audio oscillator as described in paragraph 374*c* and a 100,000-ohm resistor between terminals A and D, and terminals C and D of connector J101.

c. Adjust output frequency of the audio oscillator to 1,000 cps at an output level as indicated on Transmission Measuring Set TS–569/FT of +10 dbm.

d. Turn the INPUT ADJ control to position 15.

e. Turn the MEASURE switch to 1KC ADJ position.

f. Connect Voltmeter ME–30A/U between terminals C and D of connector J101. The voltage on the voltmeter should read between .385 and .485 volt.

g. Turn the INPUT ADJ control to the OFF

position. Connect terminals A and D of connector J101 to the 600-ohm jacks of one of the two repeating coils on Transmission Measuring Set TS–569/FT. Connect a cable from the 135-ohm jacks of the repeating coil to the ATTENUATOR in jacks of the measuring set. The indication on the measuring set should be 10 dbm ±.5 db.

377. Frequency Response Test

To test the frequency response of the transmitter, follow the procedure outlined in *a* through *f* below.

a. Adjust the transmitter in accordance with the tuning procedure for normal operation as described in paragraph 105*a*.

b. Connect the audio oscillator as described in paragraph 374*c*.

c. Adjust the audio oscillator frequency to 1,000 cps and its output as read on Transmission Measuring Set TS–569/FT to +16 dbm. Record the output read on Transmission Measuring Set TS–569/FT connected to the REC binding posts of the receiver. Record this reading.

d. Keeping the output level constant at +16 dbm, adjust the audio oscillator to each of the frequencies listed in the chart below. The output column lists the permissible difference between the output at each test frequency and the output at 1,000 cps (*c* above).

Frequency (cps)	Output (db)
250	+4 to −1.5
4,000	+4 ±1.0
8,000	+4 ±1.0
16,000	+4 ±1.0
32,000	+4 ±1.0
48,000	+4 ±1.0
68,000	+4 ±1.0
90,000	At least −35

378. Final Test of Transmitter for Distortion

To test a transmitter for distortion, it is first necessary to test a receiver for distortion (par. 367). The receiver, which has been proven satisfactory, is used as test equipment. Follow the procedures outlined in *a* through *e* below to test the transmitter.

a. Adjusting Receiver.

(1) Adjust receiver for operation on channel 250 on the B-band (pars. 109–113*a*).

(2) Connect Signal Generator AN/URM–70 to the ANTENNA jack.

(3) Adjust the AN/URM–70 to a frequency of 224.750 mc and the output to 15,000 microvolts.

(4) Turn the MEASURE switch of the receiver to the SIG LEV position.

(5) Note the reading of the MEASURE meter.

(6) Disconnect the AN/URM–70.

b. Adjusting Transmitter. Adjust the transmitter for operation on channel 250 on the B-band by following the procedure outlined in paragraphs 94 through 108.

c. Coupling Transmitter to Receiver. Three possible ways are suggested to couple the receiver to the transmitter. The first method ((1) below) is illustrated in figure 265. The other two methods ((2) and (3) below) are not illustrated. Follow the procedure in (1), (2), or (3) below depending on the test equipment available at the depot.

(1) *First method.*

(*a*) Prepare a short length of cable (about 2 ft. of cable RG–14A/U) by partially removing the cable-shield braid from the middle of the cable to expose an inch or two of the center conductor.

(*b*) Connect the prepared cable between the transmitter ANTENNA jack and the wattmeter.

(*c*) Prepare another short length of cable (about 2 ft. of cable RG–14A/U) by removing about 4 inches of cable-shield braid from one end to expose the center conductor.

(*d*) Wind the exposed center conductor ((*c*) above) three times around the cable connected between the transmitter and the wattmeter.

(*e*) Solder the free end of the center conductor coil to the cable-shield braid of its cable.

(*f*) Connect the loose end of the cable to the ANTENNA jack of the receiver.

(*g*) Apply power to the transmitter and the receiver.

(*h*) Slide the coupling coil on the transmitter output cable until the MEASURE meter of the receiver

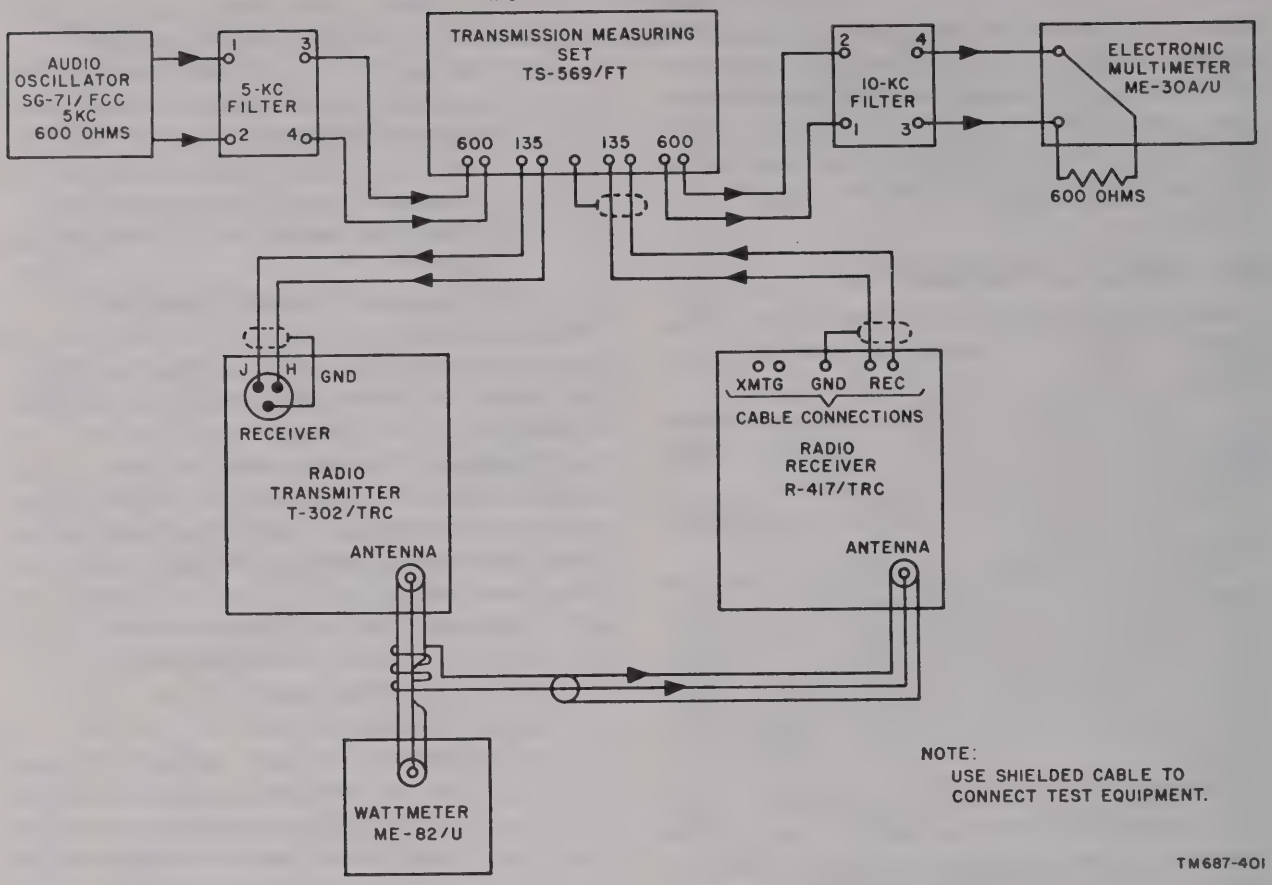

Figure 265. Test arrangement, transmitter distortion test.

indicates an input signal level of 15,000 μv (same reading shown in *a*(5) above).

(2) *Second method.*

(*a*) Connect a coaxial T-connector between the ANTENNA jack of the transmitter and the wattmeter.

(*b*) Prepare a cable assembly by attaching a male connector to one end of a 2-foot length of cable RG–14A/U and a female connector to the other end.

(*c*) Attach the female connector to the ANTENNA jack of the receiver.

(*d*) Remove the center connection prong from the male connector and attach the cable to the coaxial T-connector ((*a*) above).

(3) *Third method.*

(*a*) Reduce the power of the transmitter by turning the 750V ADJ switch on Power Supply PP–685/TRC to position 1.

(*b*) Connect the transmitter ANTENNA jack directly to the receiver ANTENNA jack. Use a sufficient length of cable RG–21/U to dissipate the power. Use the chart below to determine the correct length of cable for each of the frequencies listed in the first column.

Frequency (mc)	Cable length (ft)
100	400
200	300
400	200

d. Test Procedure.

(1) Adjust the SG–71/FCC frequency to 5 kc and its output impedance to 600 ohms.

(2) Connect the audio oscillator to terminals 1 and 2 of a 5-kc filter.

(3) Connect terminals 3 and 4 of the 5-kc filter to the 600-ohm jacks of one of

the repeating coils of Transmission Measuring Set TS–569/FT.

(4) Connect a cable from the 135-ohm jacks of the same repeating coil ((3) above) to the ATTENUATOR IN jack of the transmission measuring set.

(5) Adjust the output power of the audio oscillator for a reading of +6 dbm on the transmission measuring set.

(6) Remove the cable from the ATTENUATOR IN jack and the 135-ohm jacks of the repeating coil.

(7) Connect cable assembly CX–2420/U and a twin-plug cable between the 135-ohm jacks ((6) above) and terminals H and J of RECEIVER jack J101 of the transmitter (fig. 265).

(8) Connect the REC CABLE CONNECTION terminals of the receiver to the ATTENUATOR IN jacks of the measuring set, and set the 600 OHMS–135 OHMS switch to the 135 OHMS position.

(9) Adjust the OUTPUT ADJ control of the receiver for an indication of +6 ±.5 db on the measuring set.

(10) Disconnect the cable from the ATTENUATOR IN jacks of the measuring set and connect it to the 135-ohm jacks of the other repeating coil of the measuring set (fig. 265).

(11) Connect the 600-ohm side of the same repeating coil ((10) above) to terminals 1 and 2 of a 10-kc filter.

(12) Connect terminals 3 and 4 of the 10-kc filter to Voltmeter ME–30A/U (terminal 4 to ground). Connect a 600-ohm resistor across the input terminals of the ME–30A/U or across terminals 3 and 4 of the 10-kc filter. If the distortion is not excessive, Voltmeter ME–30A/U should read .003 volt or less.

e. Determining Cause of Transmitter Distortion. If the test procedure (*d* above) indicates abnormal distortion, determine the cause of the distortion by following the procedure outlined in (1) through (4) below.

(1) Determine if the distortion is caused by the receiver (par. 367).

(2) Determine if the test equipment is causing the distortion by connecting the 135-ohm binding posts of one repeating coil to the respective 135-ohm binding posts of the other repeating coil of Transmission Measuring Set TS–569/FT. If the test equipment is not causing the distortion, the indication on Voltmeter ME–30A/U will be .001 volt or less.

(3) Check the transmitter base-band amplifier for limiting distortion. This is done by using the same test arrangement used for testing the overall transmitter distortion (*a–d* above) and determining that the value of the third harmonic of the modulating signal is low enough according to the procedure outlined in (*a*) through (*d*) below.

(*a*) Remove the strapping between the 135-ohm binding posts of the measuring set that was connected as indicated in (2) above.

(*b*) Change the frequency of the audio oscillator from 5 kc to 3.4 kc.

(*c*) If the third harmonic distortion is low enough, Voltmeter ME–30A/U will read .0018 volt or less.

(*d*) If the third harmonic distortion is too great, replace tubes V101 and V102 of the base-band amplifier. If the distortion is still too great, voltage and resistance measurements and signal substitution are required.

(4) Perform the final test and alinement of the rf exciter plug-in assembly (par. 349). A faulty reactance modulator tube or misalinement and mistracking of rf exciter circuits are common causes of distortion.

CHAPTER 8

SHIPMENT AND LIMITED STORAGE AND DEMOLITION TO PREVENT ENEMY USE

Section I. SHIPMENT AND LIMITED STORAGE

379. General

a. Signal Corps equipment will become damaged in shipment if it is carelessly or inadequately repackaged after being used in the field. Damage can be caused by physical shock, resulting from poor packing techniques. Whenever Radio Set AN/TRC–24, Radio Terminal Set AN/TRC–35, and Radio Relay Set AN/TRC–36 are to be shipped, protect them properly to prevent damage in transit.

b. The purpose of this section is to present a procedure for the organizations responsible for field repackaging of the sets for zone of the interior and intertheater shipment. If these instructions are followed, the sets will be properly protected.

c. Instructions for removing the sets from service and for disassembling them for repackaging are given in paragraphs 380 and 381. The chart listing the type and the estimated amount of each material needed (par. 382) is to be used as a guide. *Packaging* instructions include any necessary cleaning and preserving, and all steps to follow in placing the components in their transit cases. *Packing* refers to the strapping and marking.

380. Disassembly

The following instructions are recommended as a guide for preparing the radio set for transportation and storage.

a. Disconnect the intercomponent cabling. Roll and fasten all separate cables. Replace cables in proper cases (par. 6).

b. Take down antenna assemblies and antenna supports. Antenna lowering and disassembly instructions are given in paragraph 381.

c. Replace all equipment and accessories in the proper cases (par. 6).

381. Lowering and Disassembling Antenna Assemblies and Antenna Support

a. To lower the antenna, proceed as follows:

(1) Assemble gin pole on GIN POLE tube of mast base (par. 66).

(2) Place gin pole cap on gin pole (fig. 80).

(3) Attach the block and tackle and the gin pole rope guys to the gin pole cap.

(4) Attach gin pole rope guys to the hinged guy attachments on the side guy stakes and make gin pole rope guys taut.

(5) Fasten the other end of the block and tackle assembly securely to the hinged guy attachment on the front guy stake (or the raising stake if still in place).

(6) Adjust the length of the block and tackle assembly until it is taut.

(7) Remove the guys from the hinged guy attachment on the front guy stake and attach them to the gin pole cap. Keep guys taut during this transfer; change one at a time.

(8) Position the A-frame to support the mast at a point about 3 feet in front of the antenna reflector support guy plate.

(9) Position one man at the rear guy stake to keep the rear guys taut while lowering the mast.

(10) Gently lower the mast by means of the block and tackle.

b. To disassemble the mast and the antennas proceed as follows:

(1) Remove the cable clamps, wipe them clean and replace them in Antenna Reflector Support Case CY–1387/TRC.

(2) Remove the two cable assemblies CG–1030/U, wipe them clean, and roll them up on Cable Reel RC–404/TR.

(3) Remove the two cable assemblies CG–1042/U, wipe them clean and replace them in antenna case.

(4) Remove all guys, wipe them clean, roll them up carefully on the guy reels and replace in Accessories Case CY–1392/G.

(5) Remove the antennas from the reflectors, disassemble, wipe them clean, and replace them in the antenna cases.

(6) Remove the reflectors from the antenna reflector support, wipe them clean, fold the reflectors and replace them in the reflector case.

(7) Remove the antenna reflector support, wipe it clean and replace it in the antenna reflector support case.

(8) Remove the A-frame from underneath the mast, wipe it clean, fold, and replace it in the reflector case.

(9) Disassemble the mast and the gin pole, wipe them clean, and place the mast sections in the mast section carriers. Place the guy plates in Accessories Case C–1392/G.

(10) Replace all hinged guy attachments in the mast accessories case.

(11) Pull all stakes, clean and replace in the stake carrier with hammer.

(12) Place the mast base in the mast accessories case and pack this case.

382. Material Requirements (Estimated)

The following materials are required for repackaging Radio Set AN/TRC–24, Radio Terminal Set AN/TRC–35, and Radio Relay Set AN/TRC–36:

Item	Amount (ft)
Steel strapping ⅝ x .020 (AN/TRC–24)	836
Steel strapping ⅝ x .020 (AN/TRC–35)	1,138
Steel strapping ⅝ x .020 (AN/TRC–36)	1,868

383. Field Repackaging

a. Packaging. Stow and secure all components in the appropriate compartments of the transit cases. Close the cases and secure all fastenings. Usually no further packaging is required.

b. Packing. Transit cases must be strapped for intertheater shipments. Shipping containers and case liners are not required.

c. Marking. Transit cases shall be marked in accordance with the requirements of Section II, SR 55–720–1.

Section II. DEMOLITION OF MATERIEL TO PREVENT ENEMY USE

384. General

The demolition procedures outlined in paragraph 385 will be used to prevent the enemy from using or salvaging this equipment. Demolition of the equipment will be accomplished only upon order of the commanding officer.

385. Methods of Destruction

a. Smash. Smash the tuners, crystals, tubes, meters, controls, coils, switches, capacitors, transformers, and headsets; use sledges, axes, handaxes, pickaxes, hammers, crowbars, or heavy tools.

b. Cut. Cut cords, headsets, and wiring; use axes, handaxes, or machetes.

c. Burn. Burn cords, resistors, capacitors, coils, wiring, and manuals; use gasoline, kerosene, oil, flame throwers, or incendiary grenades.

d. Explosives. If explosives are necessary, use firearms, grenades, or TNT.

e. Disposal. Bury or scatter the destroyed parts in slit trenches, foxholes, or other holes, or throw them into streams.

f. Destroy. Destroy everything.

RESISTOR COLOR CODE MARKING
(MIL-STD RESISTORS)

AXIAL-LEAD RESISTORS (INSULATED)

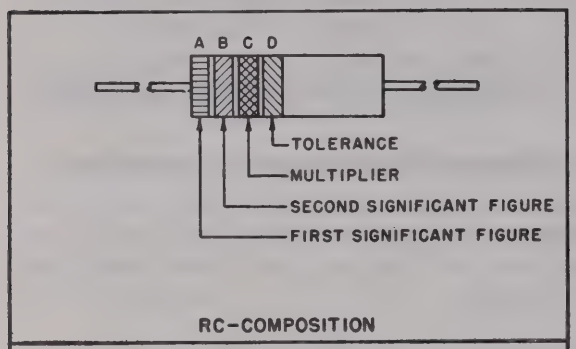

RC-COMPOSITION

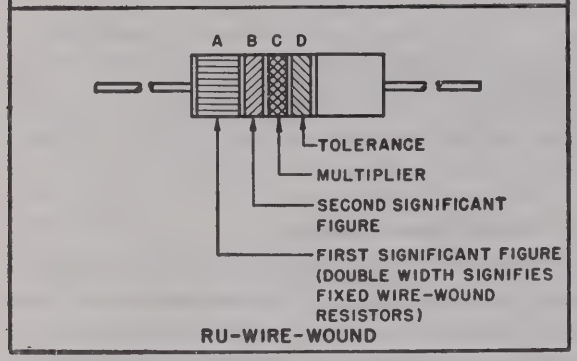

RU-WIRE-WOUND

RADIAL-LEAD RESISTORS (UNINSULATED)

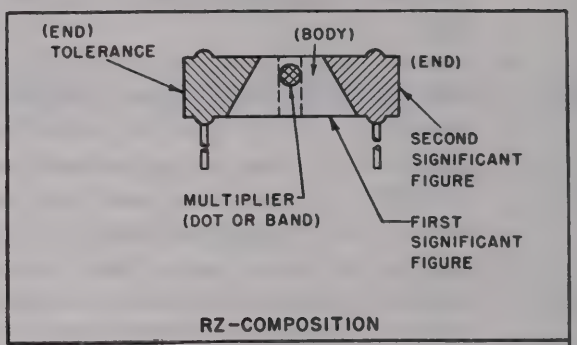

RZ-COMPOSITION

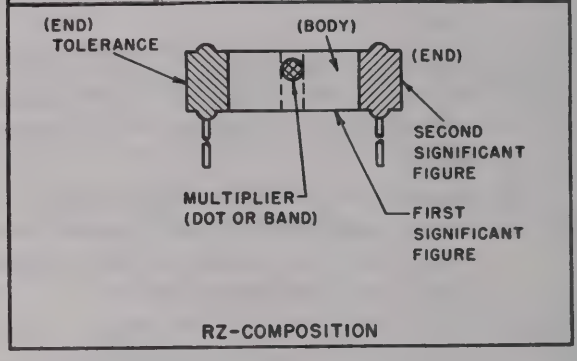

RZ-COMPOSITION

RESISTOR COLOR CODE

BAND A OR BODY*		BAND B OR END*		BAND C OR DOT OR BAND*		BAND D OR END*	
COLOR	FIRST SIGNIFICANT FIGURE	COLOR	SECOND SIGNIFICANT FIGURE	COLOR	MULTIPLIER	COLOR	RESISTANCE TOLERANCE (PERCENT)
BLACK	0	BLACK	0	BLACK	1	BODY	± 20
BROWN	1	BROWN	1	BROWN	10	SILVER	± 10
RED	2	RED	2	RED	100	GOLD	± 5
ORANGE	3	ORANGE	3	ORANGE	1,000		
YELLOW	4	YELLOW	4	YELLOW	10,000		
GREEN	5	GREEN	5	GREEN	100,000		
BLUE	6	BLUE	6	BLUE	1,000,000		
PURPLE (VIOLET)	7	PURPLE (VIOLET)	7				
GRAY	8	GRAY	8	GOLD	0.1		
WHITE	9	WHITE	9	SILVER	0.01		

*FOR WIRE-WOUND-TYPE RESISTORS, BAND A SHALL BE DOUBLE-WIDTH. WHEN BODY COLOR IS THE SAME AS THE DOT (OR BAND) OR END COLOR, THE COLORS ARE DIFFERENTIATED BY SHADE, GLOSS, OR OTHER MEANS.

EXAMPLES (BAND MARKING):
10 OHMS ±20 PERCENT: BROWN BAND A; BLACK BAND B; BLACK BAND C; NO BAND D.
4.7 OHMS ±5 PERCENT: YELLOW BAND A; PURPLE BAND B; GOLD BAND C; GOLD BAND D.

EXAMPLES (BODY MARKING):
10 OHMS ±20 PERCENT: BROWN BODY; BLACK END; BLACK DOT OR BAND; BODY COLOR ON TOLERANCE END.
3,000 OHMS ±10 PERCENT: ORANGE BODY, BLACK END; RED DOT OR BAND; SILVER END.

STD-RI

Figure 266. Resistor color code chart.

CAPACITOR COLOR CODE MARKING
(MIL-STD CAPACITORS)

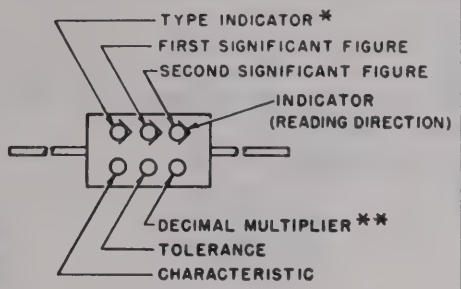

* BLACK DOT: MICA DIELECTRIC
SILVER DOT: PAPER DIELECTRIC
** INDICATES NUMBER OF ZEROS ON PAPER TYPE.

MICA (CM) AND PAPER (CN)

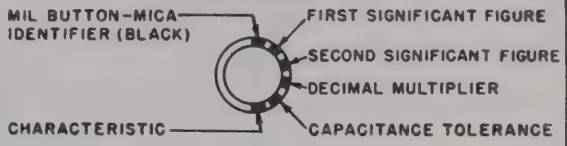

BUTTON-MICA (CB)

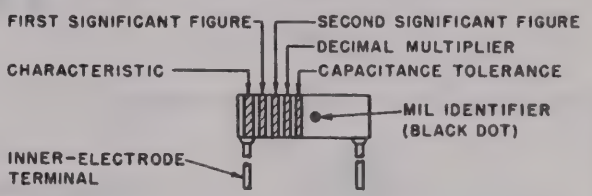

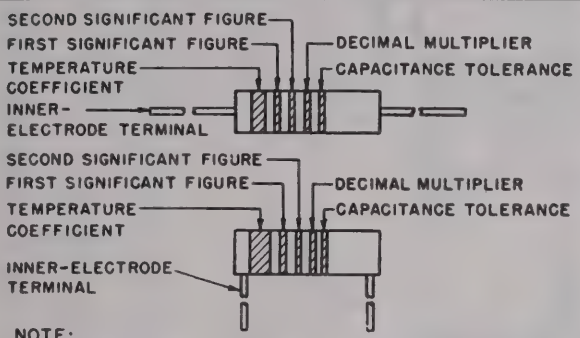

NOTE:
SPOTS MAY BE USED INSTEAD OF BANDS; TEMPERATURE COEFFICIENT MARKING IS LARGER.

CERAMIC-TEMPERATURE COMPENSATING (CC)

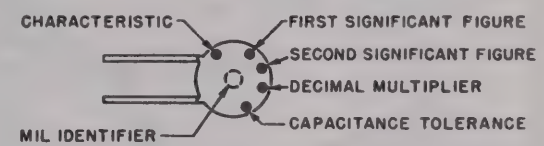

NOTES:
1. SPOTS MAY BE USED ON TUBULAR CAPACITORS; CHARACTERISTIC SPOT IS LARGER AND MIL IDENTIFIER IS ON SIDE DIAMETRICALLY OPPOSITE COLOR SPOTS.
2. MIL IDENTIFIER OF DISK TYPE IS ON REVERSE SIDE; CHARACTERISTIC SPOT IS LARGER OR SPACE BETWEEN CHARACTERISTIC AND TOLERANCE SPOTS IS THREE TIMES SPACE BETWEEN ADJACENT SPOTS.
3. TOLERANCE: YELLOW, +100%, -20%.

CERAMIC-GENERAL PURPOSE (CK)

CAPACITOR COLOR CODE

COLOR	SIG FIG.	MULTIPLIER		CHARACTERISTIC[1]				TOLERANCE[2]					TEMPERATURE COEFFICIENT (UUF/UF/°C)
		DECIMAL	NUMBER OF ZEROS	CM	CN	CB	CK	CM	CN	CB	CC		
											OVER 10UUF	10UUF OR LESS	CC
BLACK	0	1	NONE		A			20	20	20	20	2	ZERO
BROWN	1	10	1	B	E	B	W				1		-30
RED	2	100	2	C	H		X	2		2	2		-80
ORANGE	3	1,000	3	D	J	D			30				-150
YELLOW	4	10,000	4	E	P								-220
GREEN	5		5	F	R						5	0.5	-330
BLUE	6		6		S								-470
PURPLE (VIOLET)	7		7		T	W							-750
GRAY	8		8			X						0.25	+30
WHITE	9		9								10	1	-330(±500)[3]
GOLD		0.1						5		5			+100
SILVER		0.01						10	10	10			

1. LETTERS ARE IN TYPE DESIGNATIONS GIVEN IN MIL-C SPECIFICATIONS.
2. IN PERCENT, EXCEPT IN UUF FOR CC-TYPE CAPACITORS OF 10 UUF OR LESS.
3. INTENDED FOR USE IN CIRCUITS NOT REQUIRING COMPENSATION.

STD-CI

Figure 267. Capacitor color code chart.

Figure 268. Radio Transmitter T-302/TRC, schematic diagram.

(Contained in separate envelope.)

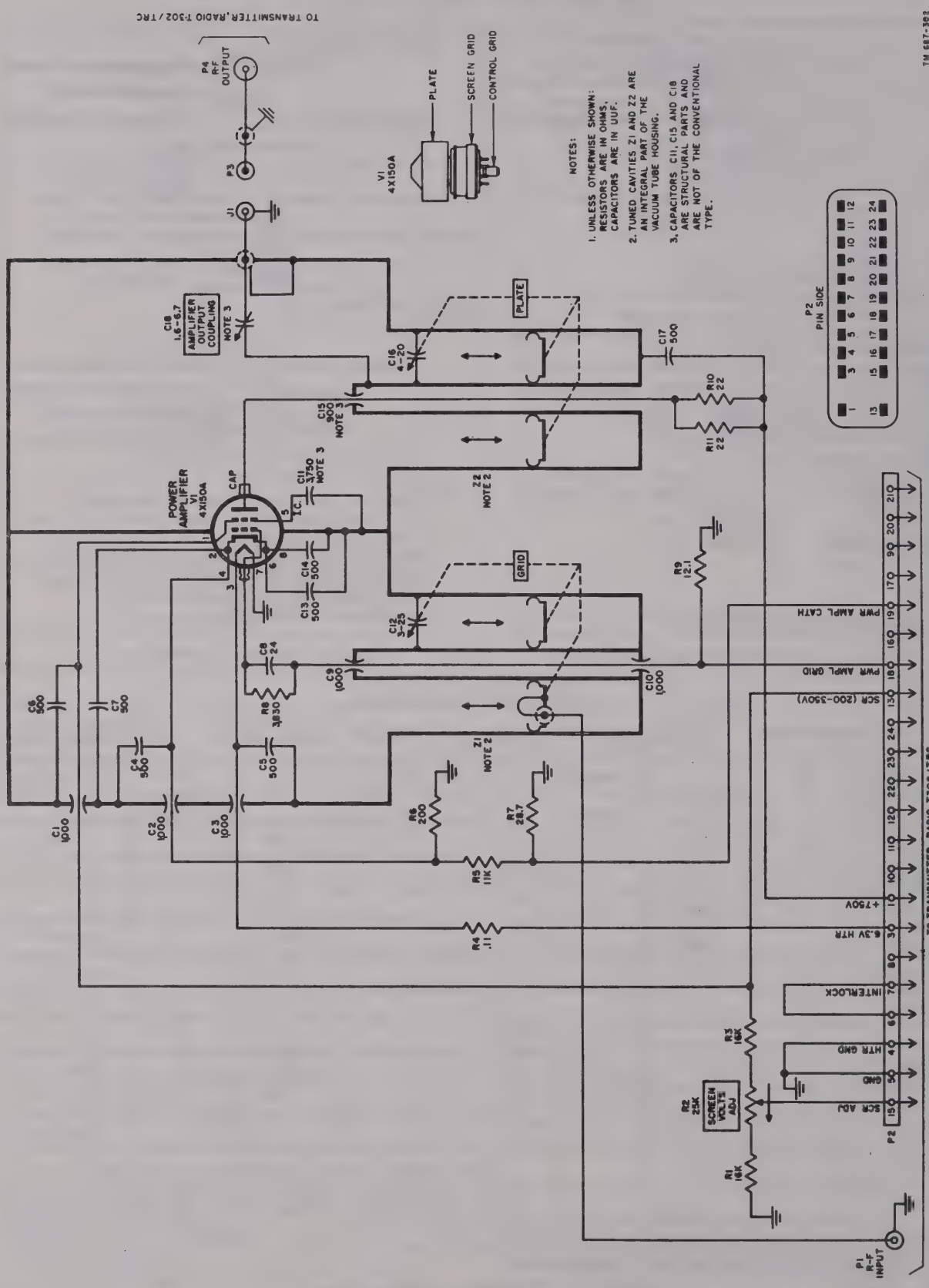

Figure 269. Radio Frequency Amplifier AM-912/TRC (transmitter B-band rf tuner), schematic diagram.

Figure 270. Radio Frequency Amplifier-Multiplier AM–915/TRC (transmitter C-band rf tuner), schematic diagram.

(Contained in separate envelope.)

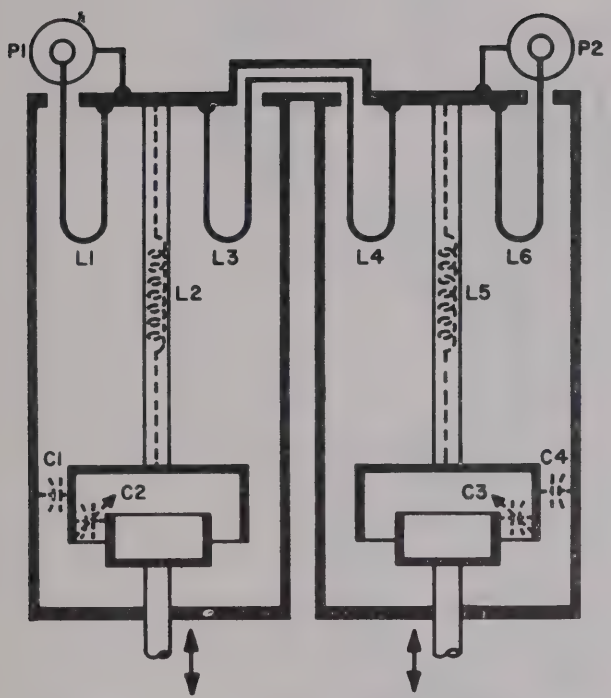

Figure 271. Band-pass filter, schematic diagram.

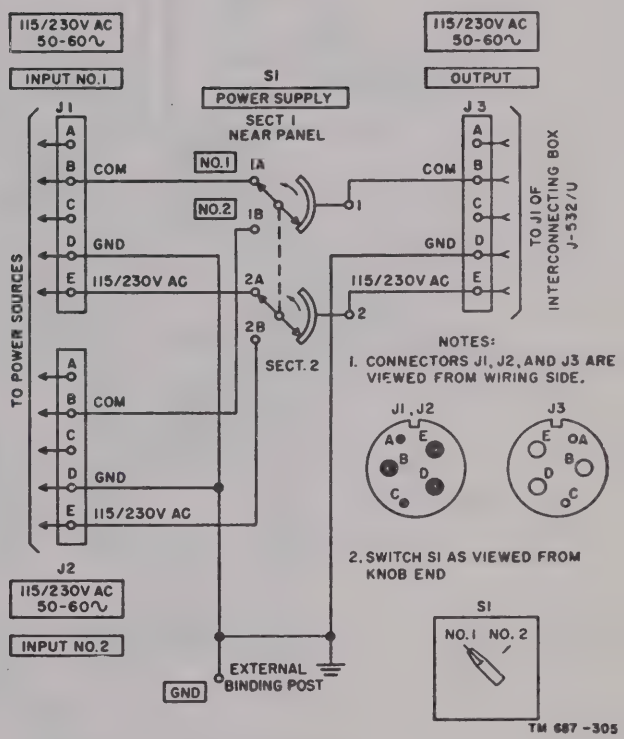

Figure 272. Switch Box SA–331/U.

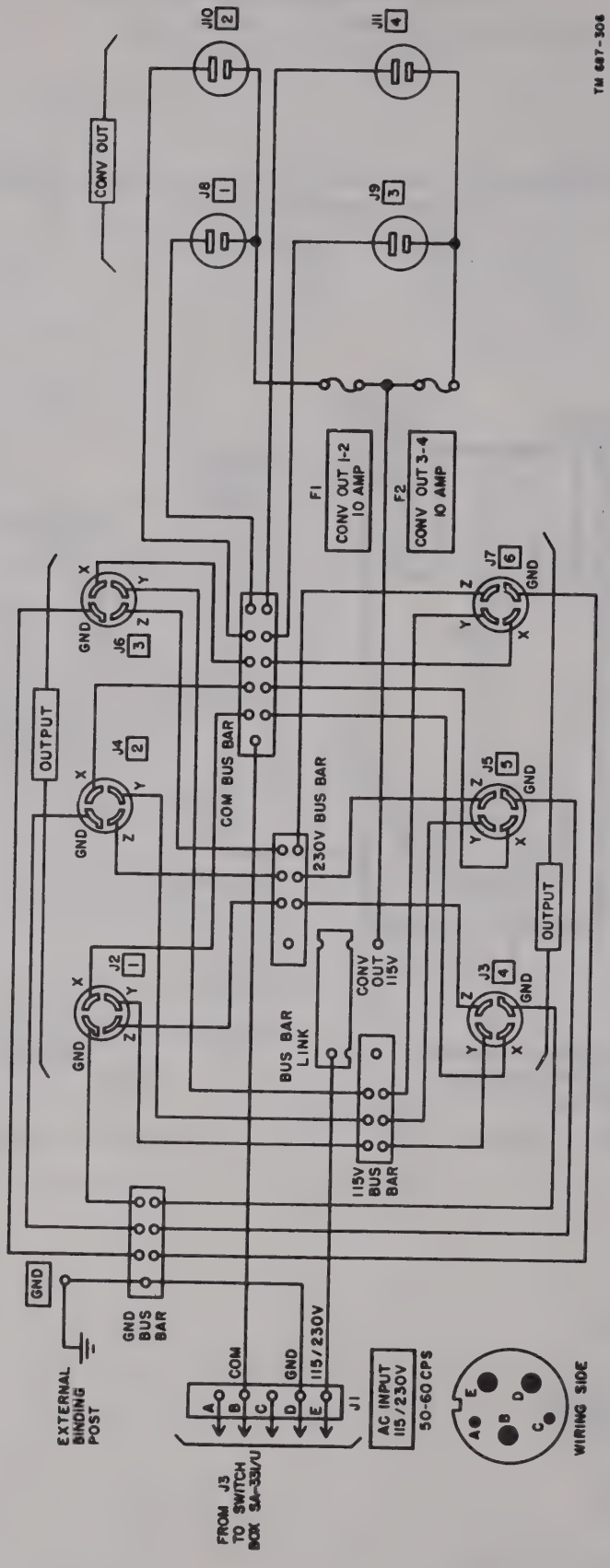

Figure 273. Interconnecting Box J-532/U, schematic diagram.

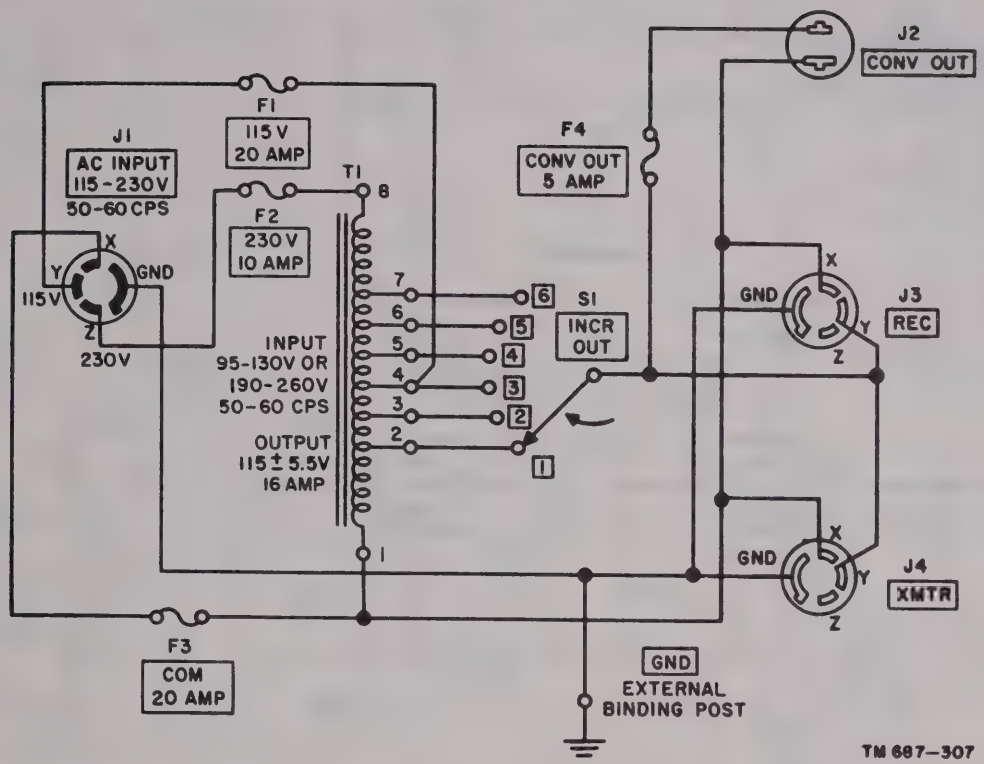

Figure 274. Autotransformer TF-167/TRC, schematic diagram.

Figure 275. Power Supply PP-685/TRC, schematic diagram.
(Contained in separate envelope.)

Figure 276. Radio Receiver R-417/TRC, schematic diagram.
(Contained in separate envelope.)

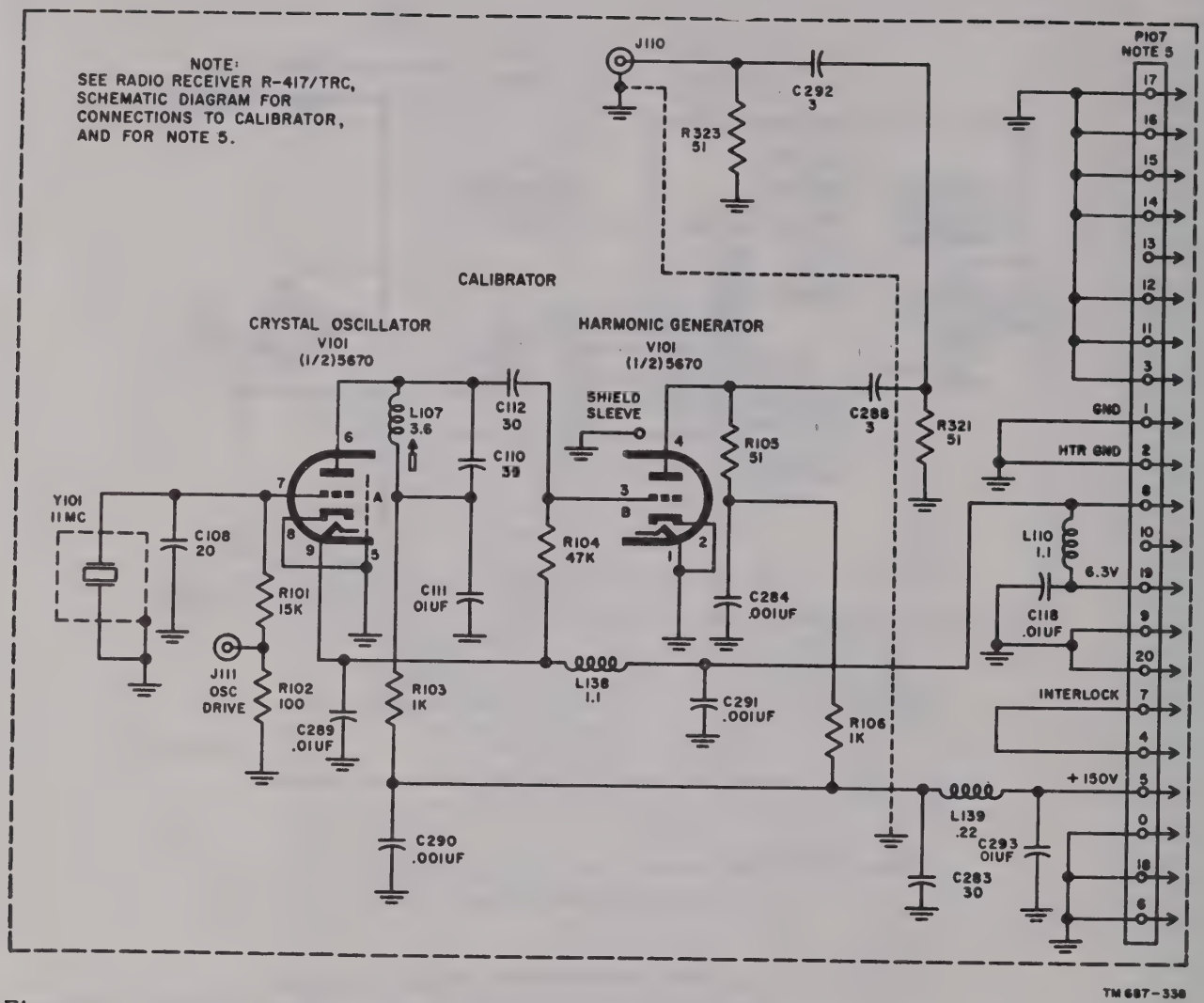

Figure 277. Calibrator plug-in assembly, schematic diagram (for radio receivers bearing serial numbers 48 and above on Order No. 16811–Phila–51 and serial numbers 1 and above on Order No. 32146–Phila–51).

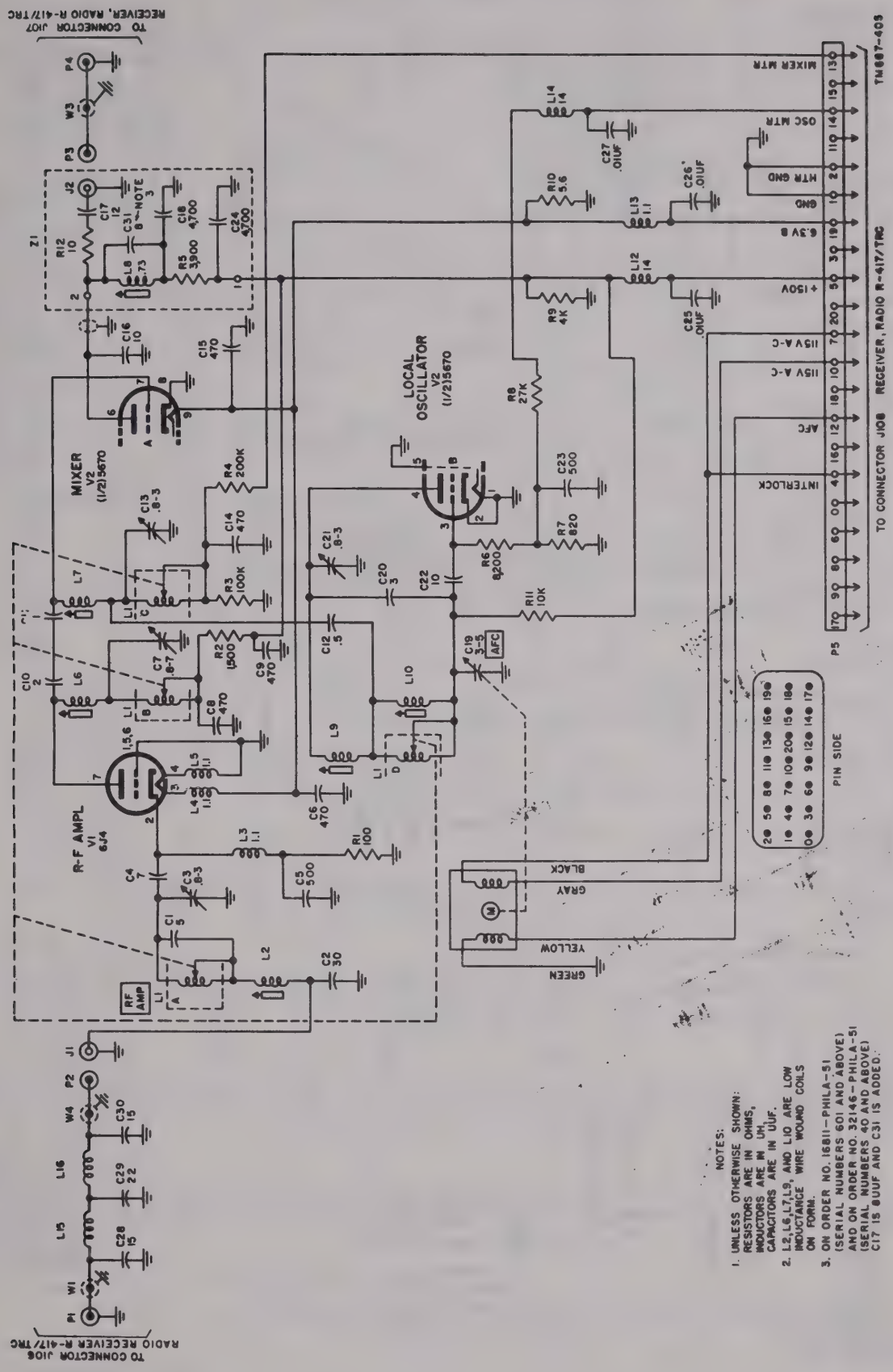

Figure 278. Amplifier-Converter AM-913/TRC, schematic diagram.

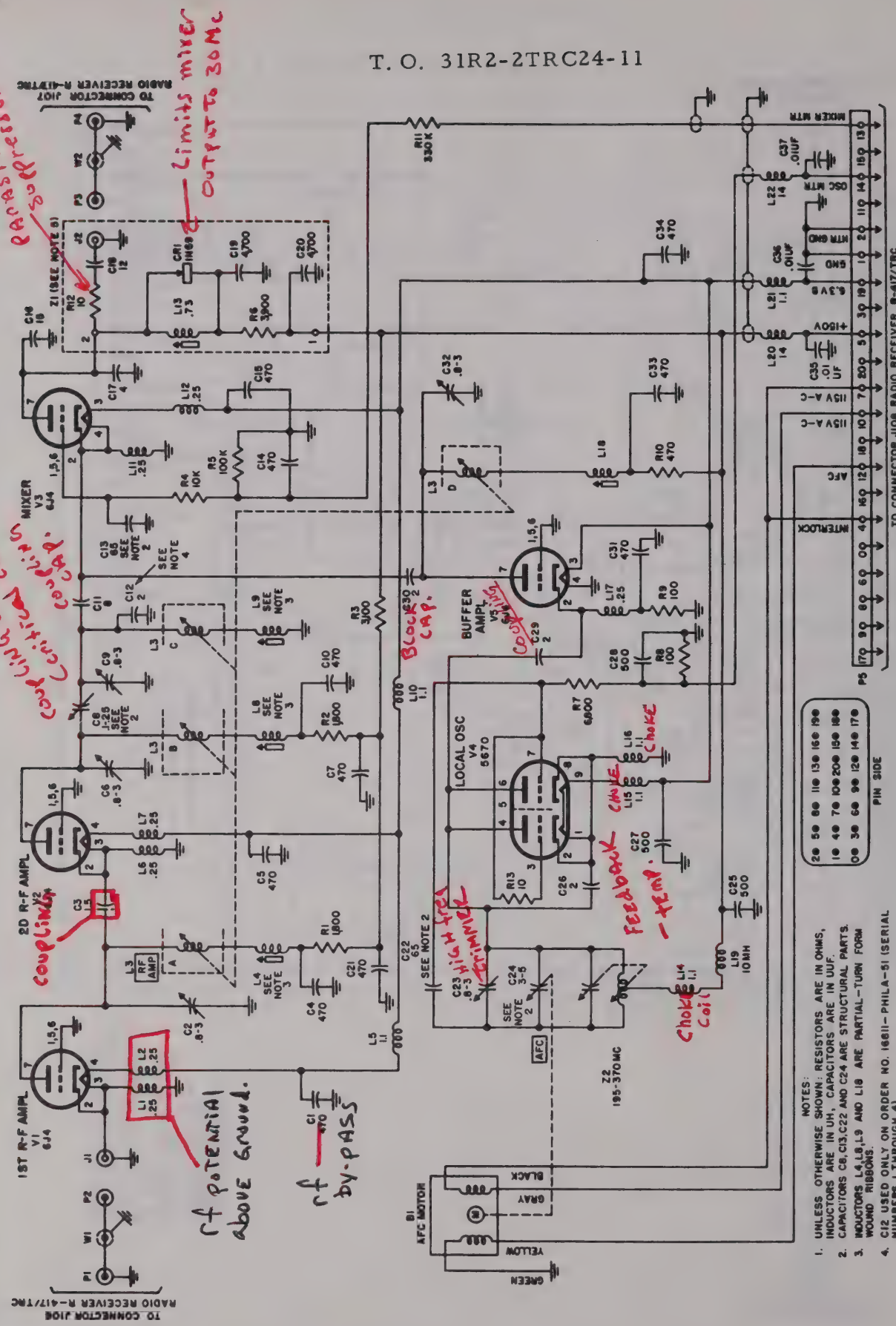

Figure 279. Amplifier-Converter AM-914/TRC, schematic diagram (for units bearing serial numbers 1-175 on Order No. 16811-Phila-51 only).

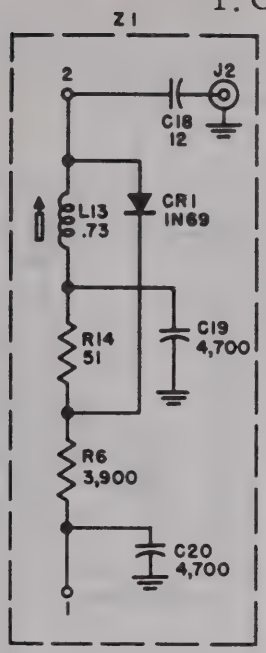

NOTES:

1. RESISTORS ARE IN OHMS, INDUCTOR IS IN UH, CAPACITORS ARE IN UUF.
2. FOR CONNECTIONS BETWEEN Z1 AND C-BAND TUNER, SEE AMPLIFIER-CONVERTER AM-914/TRC, SCHEMATIC DIAGRAM.

TM687-342

Figure 280. Z1 network, schematic diagram for Amplifier-Converter AM-914/TRC, serial numbers 176 and above on Order No. 16811-Phila-51, and for Order No. 32146-Phila-51.

Figure 281. Transmitter upper-chassis frame and front panel, wiring diagram.
(Contained in separate envelope.)

Figure 282. Transmitter lower-chassis frame and front panel, wiring diagram.
(Contained in separate envelope.)

Figure 283. Transmitter base-band amplifier and metering circuit plug-in assembly, wiring diagram.
(Contained in separate envelope.)

Figure 284. Rf exciter plug-in assembly, wiring diagram for type 1 procured on Order No. 16811-Phila-51.
(Contained in separate envelope.)

Figure 285. Rf exciter plug-in assembly, wiring diagram for types 2 and 3 procured on Order No. 16811-Phila-51. and serial numbers 1 and above on Order No. 32146-Phila-51.
(Contained in separate envelope.)

Figure 286. Rf exciter plug-in assembly, wiring diagram for types 4 and 5 procured on Order No. 16811-Phila-51.
(Contained in separate envelope.)

Figure 287. Crystal oscillator and pulse generator plug-in assembly, wiring diagram.
(Contained in separate envelope.)

381345 O—56——30

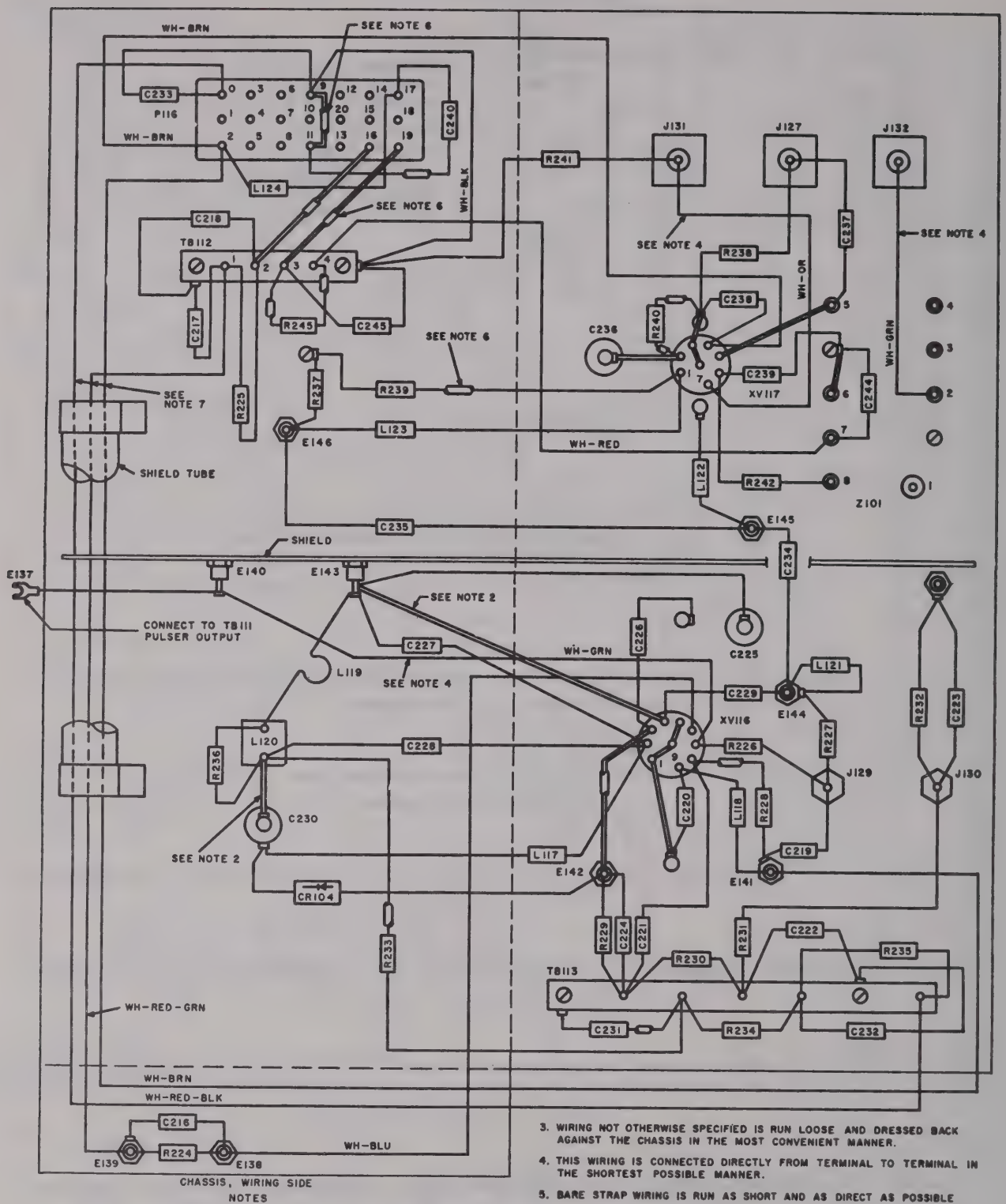

NOTES

1. WIRING NOT OTHERWISE SPECIFIED IS 22 GAUGE WIRE WITH EXTRUDED NYLON JACKET.
2. ═══ DENOTES 20 GAUGE BARE TINNED ANNEALED COPPER WIRING.
3. WIRING NOT OTHERWISE SPECIFIED IS RUN LOOSE AND DRESSED BACK AGAINST THE CHASSIS IN THE MOST CONVENIENT MANNER.
4. THIS WIRING IS CONNECTED DIRECTLY FROM TERMINAL TO TERMINAL IN THE SHORTEST POSSIBLE MANNER.
5. BARE STRAP WIRING IS RUN AS SHORT AND AS DIRECT AS POSSIBLE
6. ▭ DENOTES IMPREGNATED FIBRE GLASS SLEEVING
7. THESE WIRES ARE RUN THROUGH SHIELD TUBE.

TM 687-317

Figure 288. Pulsed oscillator and afc mixer plug-in assembly, wiring diagram.

Figure 289. Transmitter afc if. amplifier plug-in assembly, wiring diagram.

(Contained in separate envelope.)

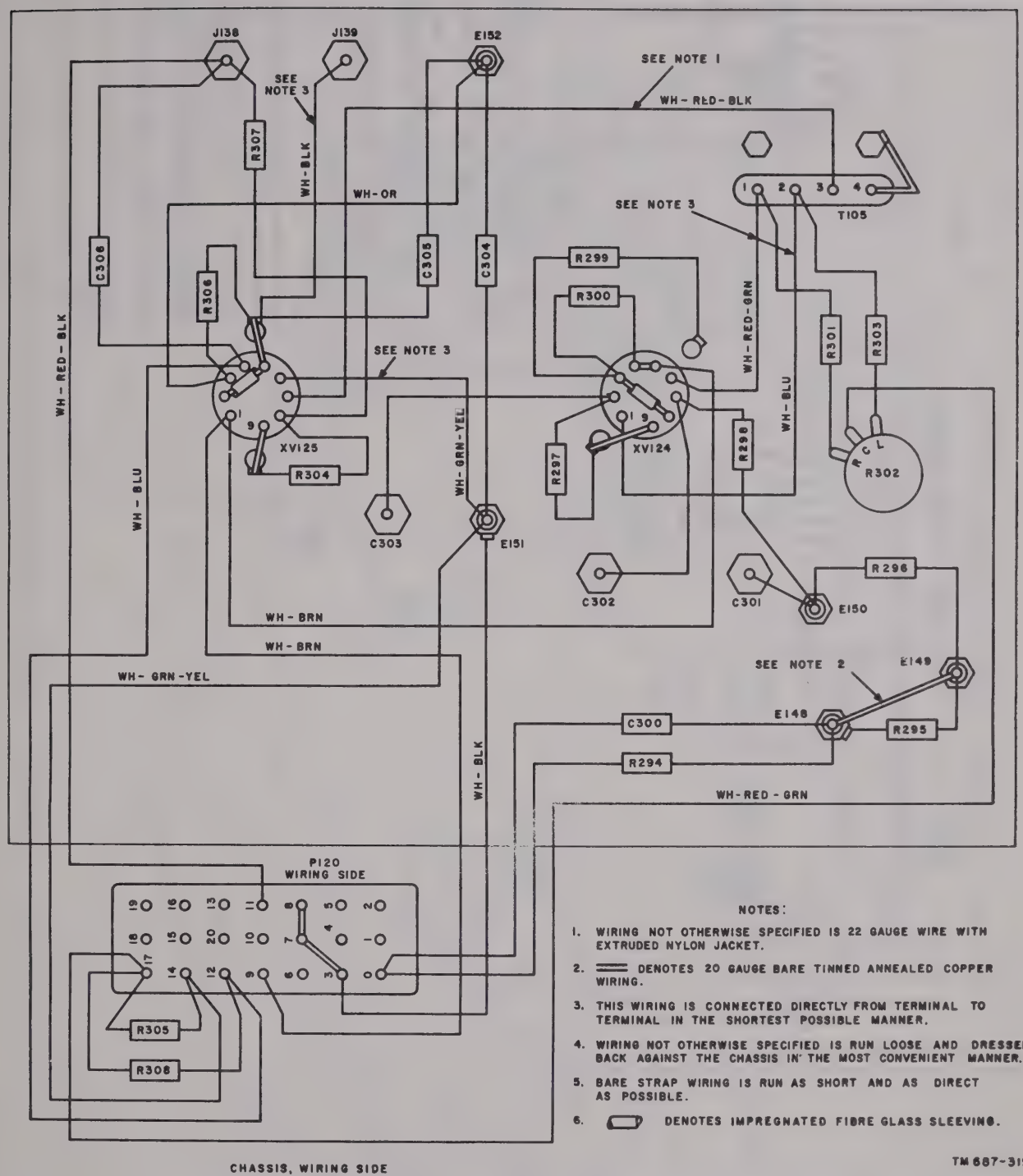

Figure 290. Transmitter afc modulator plug-in assembly, wiring diagram.

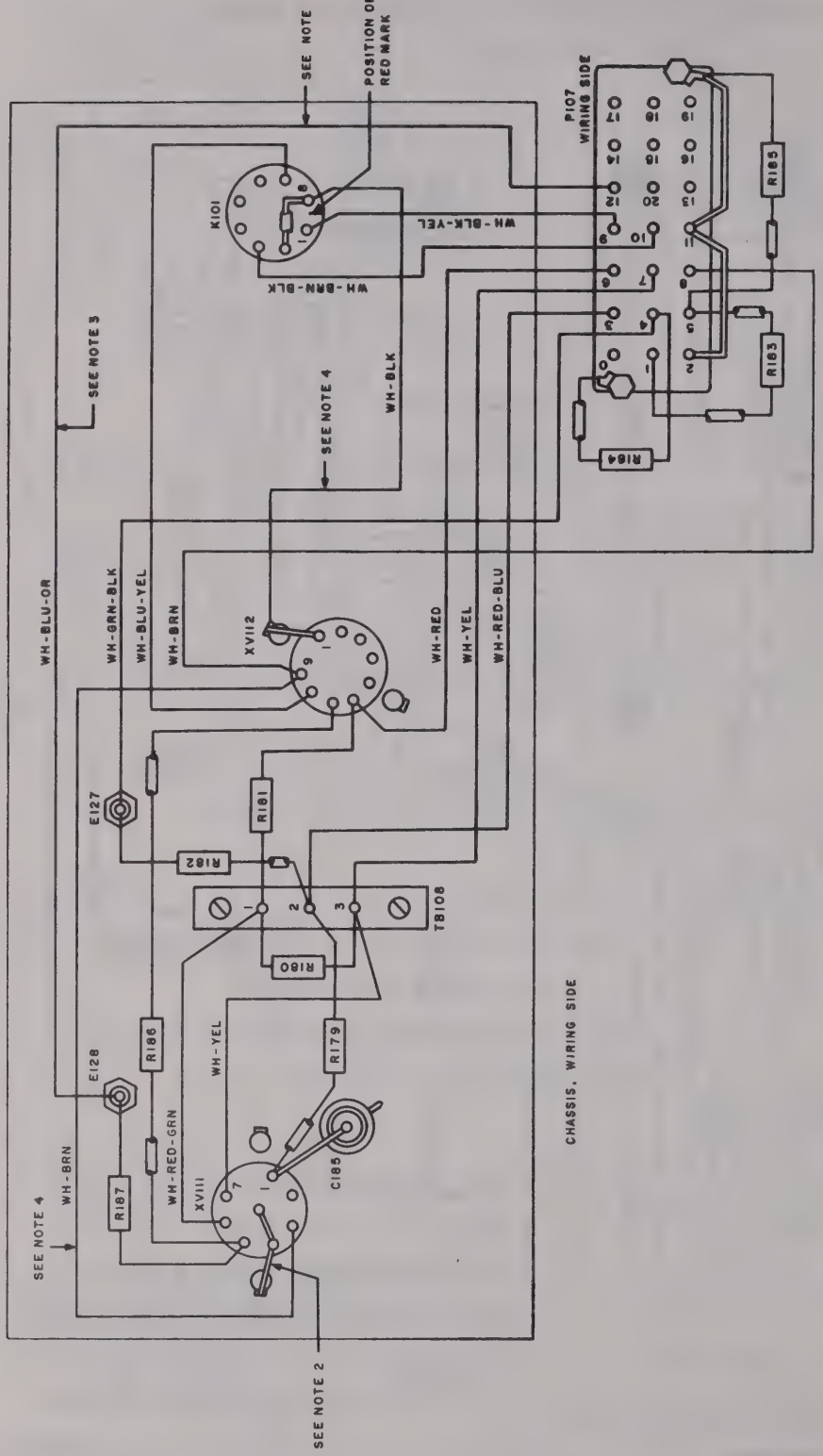

NOTES

1. WIRING NOT OTHERWISE SPECIFIED IS 22 GAUGE WIRE WITH EXTRUDED NYLON JACKET.
2. ═══ DENOTES 20 GAUGE BARE TINNED ANNEALED COPPER WIRING
3. WIRING NOT OTHERWISE SPECIFIED IS RUN LOOSE AND DRESSED BACK AGAINST THE CHASSIS IN THE MOST CONVENIENT MANNER.
4. THIS WIRING IS CONNECTED DIRECTLY FROM TERMINAL TO TERMINAL IN THE SHORTEST POSSIBLE MANNER
5. BARE STRAP WIRING IS RUN AS SHORT AND AS DIRECT AS POSSIBLE
6. ▭ DENOTES BARE IMPREGNATED FIBRE GLASS SLEEVING TM 687-320

Figure 291. Transmitter alarm plug-in assembly, wiring diagram.

Figure 292. Radio Frequency Amplifier AM–912/TRC, wiring diagram.

(Contained in separate envelope.)

Figure 293. Radio Frequency Amplifier-Multiplier AM–915/TRC, wiring diagram.

(Contained in separate envelope.)

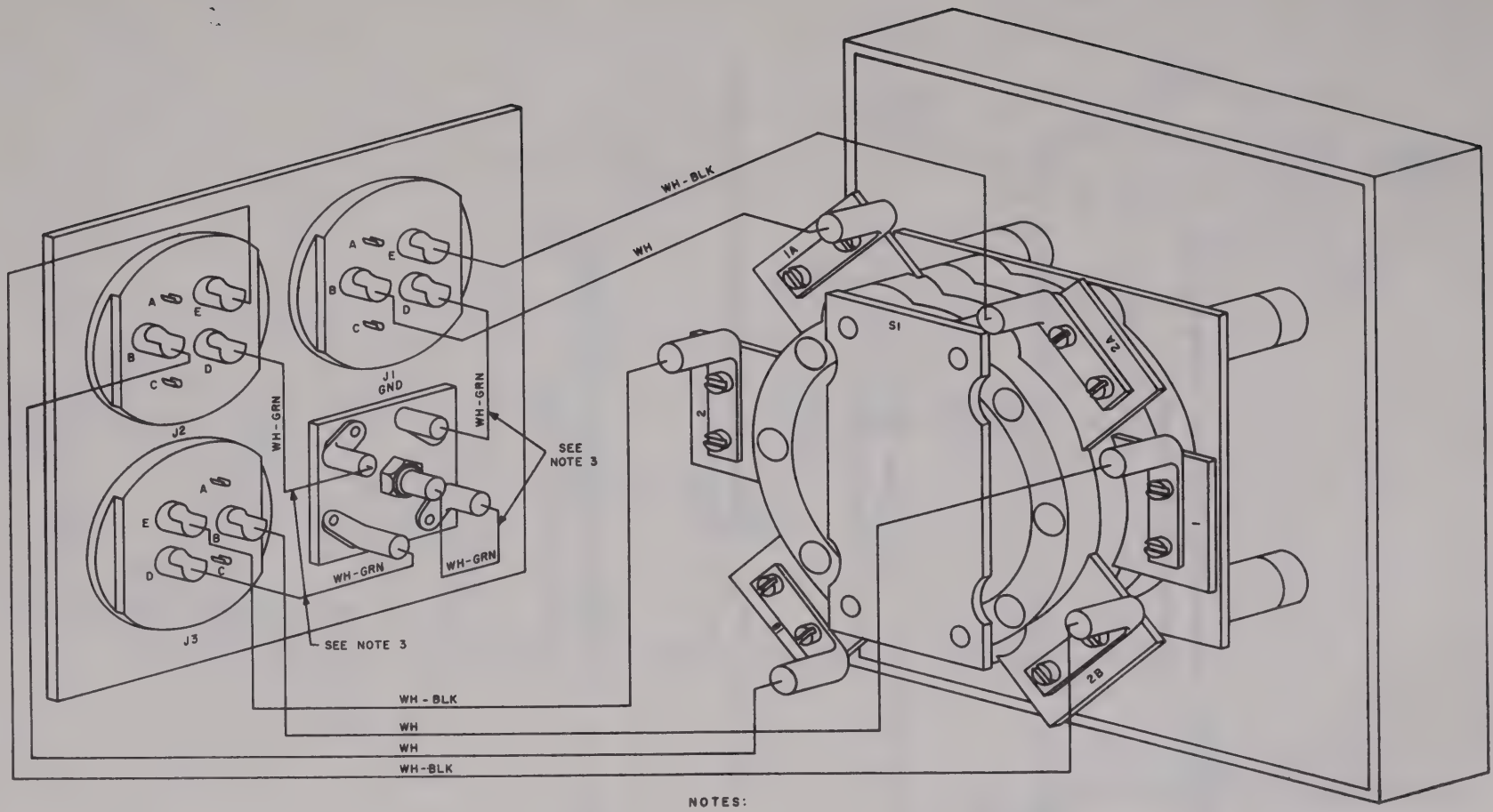

NOTES:

1. WIRING NOT OTHERWISE SPECIFIED IS 6 GAUGE WIRE WITH EXTRUDED NYLON JACKET.
2. WIRING NOT OTHERWISE SPECIFIED IS RUN DIRECTLY FROM TERMINAL TO TERMINAL WITH AN EXTRA 2 INCH SLACK INCLUDED WHEN PANELS ARE MOUNTED IN ASSOCIATED CASE.
3. THIS WIRING IS RUN LOOSE AND DRESSED BACK AGAINST THE CHASSIS IN THE MOST CONVENIENT MANNER.
4. TERMINALS ON CONNECTORS J1, J2, AND J3, AND SWITCH S1, AND GROUND PLATE ARE SLEEVED WITH 1 INCH LONG IMPREGNATED FIBRE GLASS SLEEVING.

TM 687-323

Figure 294. Switch Box SA-331/U, wiring diagram.

Figure 295. Interconnecting Box J-532/U, wiring diagram.
(Contained in separate envelope.)

Figure 296. Autotransformer TF-167/TRC, wiring diagram.
(Contained in separate envelope.)

Figure 297. Power Supply PP-685/TRC, less low-voltage rectifier plug-in assembly, wiring diagram.
(Contained in separate envelope.)

Figure 298. Power Supply PP-685/TRC low-voltage rectifier plug-in assembly, wiring diagram.
(Contained in separate envelope.)

Figure 299. Receiver frame and front panel, wiring diagram.
(Contained in separate envelope.)

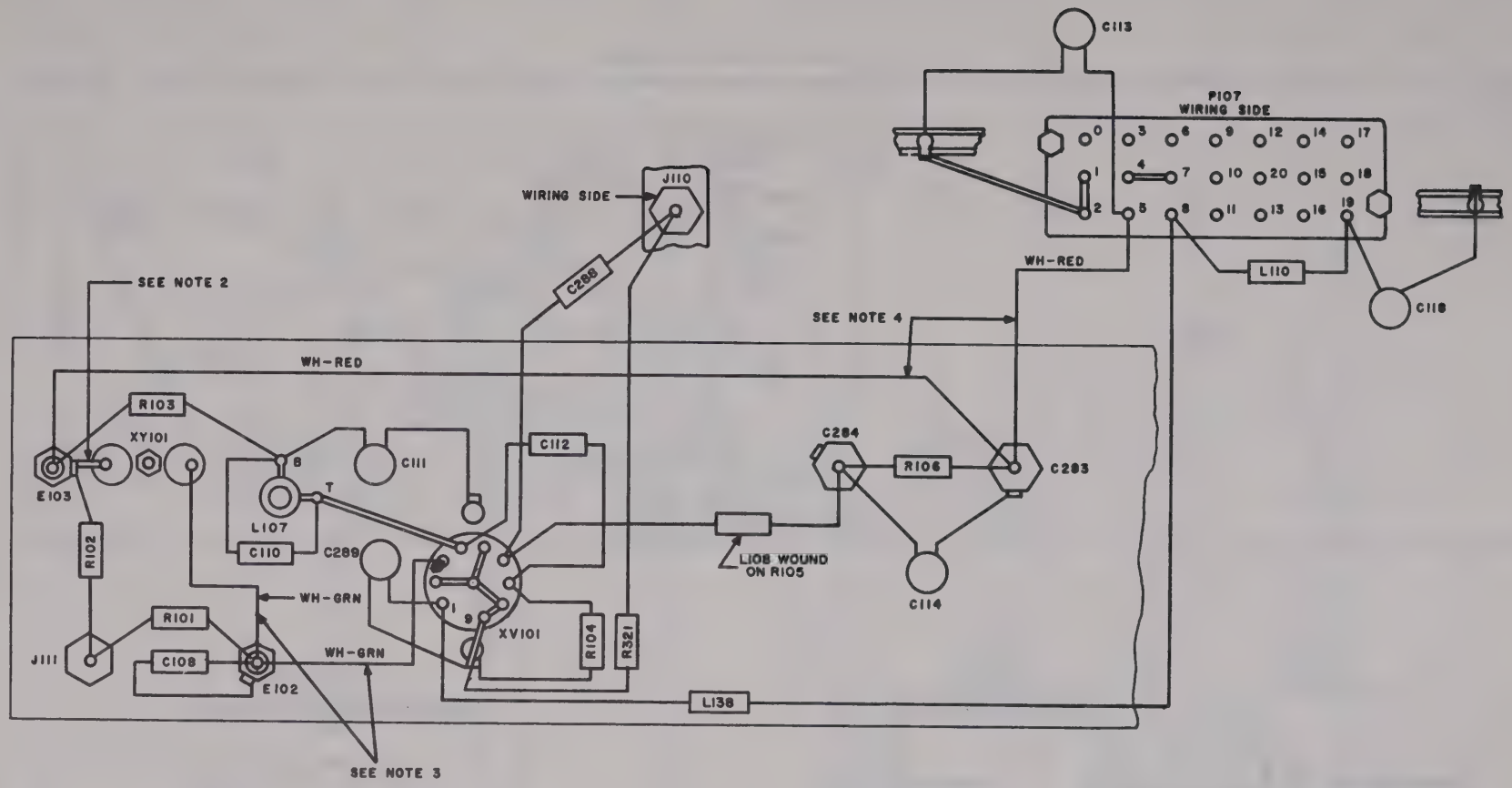

CHASSIS, WIRING SIDE

NOTES:

1. WIRING NOT OTHERWISE SPECIFIED IS 22 GAUGE WIRE WITH EXTRUDED NYLON JACKET.
2. ═══ DENOTES 20 GAUGE BARE TINNED ANNEALED COPPER WIRING.
3. WIRING NOT OTHERWISE SPECIFIED IS CONNECTED DIRECTLY FROM TERMINAL TO TERMINAL IN THE SHORTEST POSSIBLE MANNER.
4. THIS WIRING IS RUN LOOSE AND DRESSED BACK AGAINST THE CHASSIS IN THE MOST CONVENIENT MANNER.
5. BARE STRAP WIRING IS RUN AS SHORT AND DIRECT AS POSSIBLE.

TM 667-329

Figure 300. Calibrator plug-in assembly, wiring diagram for radio receivers bearing serial numbers 1 through 47 procured on Order No. 16811–Phila–51.

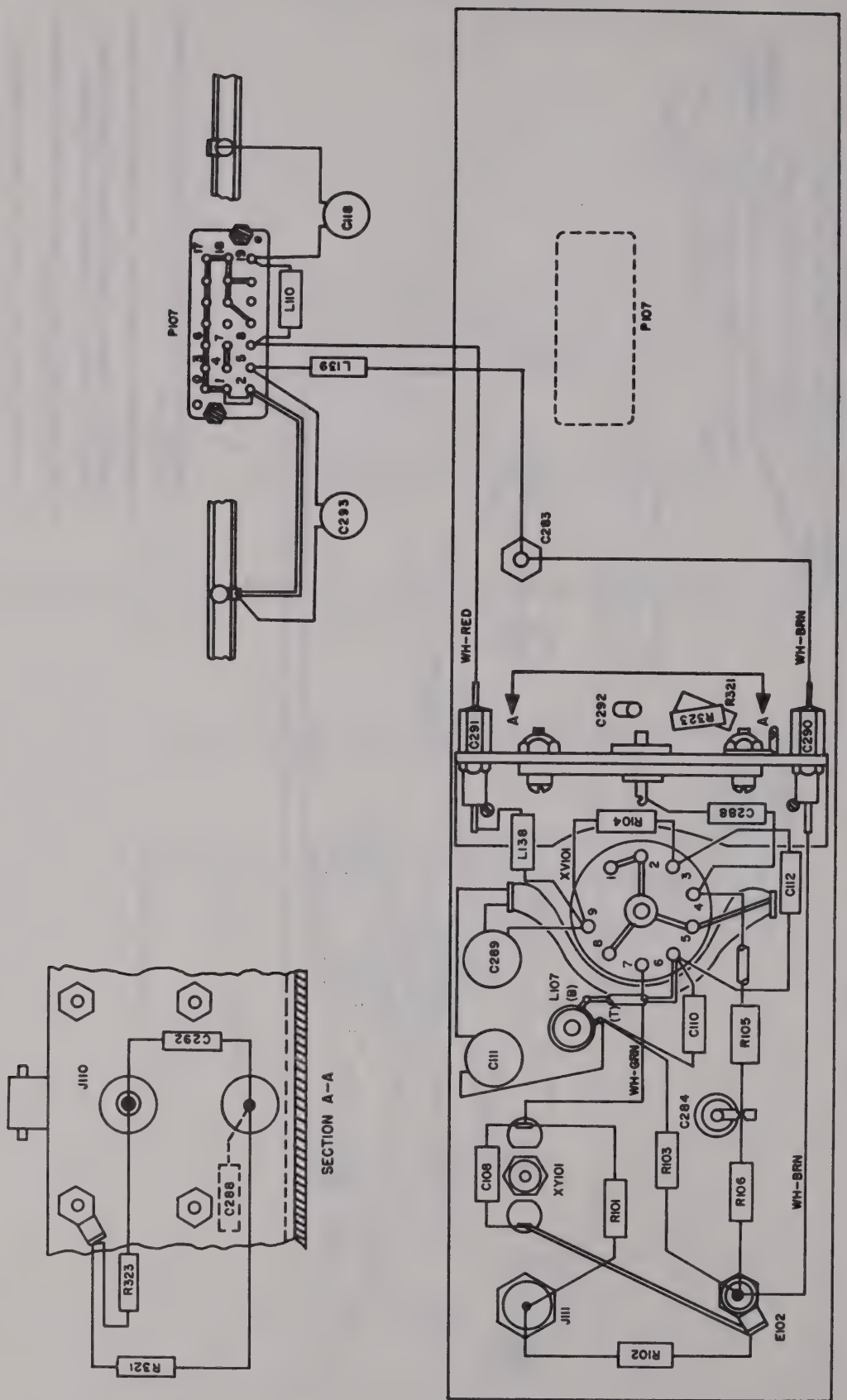

Figure 301. Calibrator plug-in assembly, wiring diagram for radio receivers bearing serial numbers 48 and above procured on Order No. 16811-Phila-51 and for Order No. 32148-Phila-51.

Figure 302. Receiver if. amplifier plug-in assembly, wiring diagram.
(Contained in separate envelope.)

Figure 303. Limiter, discriminator, and afc plug-in assembly, wiring diagram.
(Contained in separate envelope.)

Figure 304. Receiver base-band amplifier and order wire plug-in assembly, wiring diagram for types 1 and 2 procured on Order No. 16811–Phila–51.
(Contained in separate envelope.)

Figure 305. Receiver base-band amplifier and order-wire plug-in assembly, wiring diagram for types 1 through 8 procured on Order No. 16811–Phila–51.
(Contained in separate envelope.)

Figure 306. Receiver power-supply plug-in assembly, wiring diagram.
(Contained in separate envelope.)

Figure 307. Amplifier-Converter AM–913/TRC, wiring diagram.
(Contained in separate envelope.)

Figure 308. Amplifier-Converter AM–914/TRC, wiring diagram.
(Contained in separate envelope.)

INDEX

Note. All numerically named items such as (115V AC switch) are indexed in numerical sequence following the alphabetically indexed items.

	Paragraph	Page
Abm plan	56	78
AB–216/U. (*See* Scaffold Tower AB–216/U.)		
AB–235/G, mast	15*a*, 67	24, 92
Accessories Case CY–1392/G	25*c*	39
Accessories Case CY–1342/TRC:		
Description	25*b*	39
Running spares	26*e*	41
Table of components	7*c*	13
Accessories Case CY–1343/TRC	26*d*	41
Accessories Case CY–1344/TRC	25*d*	39
AC VOLTS meter:		
Description	83	120
Theory	249	265
Additional equipment required	29	41
ADJ METER control:		
Adjustments	112	138
Description	87	124
Theory	297*g*	294
Afc amplifier. (*See* 60-cps amplifier.)		
AFC BAL control:		
Adjustments	112	138
Description	87	124
Theory	290*c*, 297*f*	287, 292
Afc circuits:		
Receiver:		
Adjustment	112	138
Functioning	263	275
Transmitter:		
Functioning	198	210
Operation check	99	133
AFC control:		
RF Amplifier-Converter AM–913/TRC	88	127
RF Amplifier-Converter AM–914/TRC	89	127
Transmitter	80	112
AFC DISABLE switch:		
Adjustment	112	138
Description	87	124
Theory	297*f*	292
Afc discriminator:		
Adjusting	97	131
Functioning	205	212
Theory	239	249
Tuning	208*a*	213
Afc i-f amplifier:		
Alinement	348*c*	413
Functioning	204	211
Theory	234, 236	246, 248
Afc i-f amplifier plug-in assembly:		
Description	9*d*	18
Troubleshooting data	310*k*	312
Afc limiters:		
Adjustment	102	133
Functioning	204	211
Theory	237, 238	248
Afc mixer:		
Functioning	203	211
Theory	233	246
Afc motor:		
Checking	329	389
Receiver	273, 277, 293	278, 279, 287
Transmitter	207	212
AFC-OFF-CAL switch:		
Adjustment	110, 113	138, 139
Description	87	124
Afc operation check transmitter	99	133
Afc, operation without	130	151
Afc pull-in range (receiver)	363	442
AFC switch:		
Adjustment	95	130
Description	80	112
Theory	240	253
Afc test, transmitter	372	449
Age circuit:		
Functioning	264	276
Theory	294	290
Alarm circuits:		
Receiver. (*See* Squelch.)		
Transmitter. (*See* Low-power alarm.)		
ALARM lamp (red):		
Description	87	124
Theory	295	290
Alarm, low power. (*See* Low-power alarm.)		
Alarm (receiver), checking	364	442
ALARM switch:		
Receiver:		
Adjustments	110–114	138–141
Description	87	124
Theory	295	290
Transmitter:		
Adjustments	95, 111	130, 138
Description	80	112
Theory	244	260
Alarm test, low-power	373	449
Alinement:		
Amplifier-Converter AM–913/TRC	361	433

INDEX — (Continued)

	Paragraph	Page
Alinement—Continued		
Amplifier-Converter AM–914/TRC	362	433
Antenna	116	142
General instructions	342	403
Receiver:		
Bias oscillator	354*g*	426
Calibrator	352*c*	422
Discriminator	354*f*	425
If. amplifier	353*e*	423
Limiters	354*c*	424
Transmitter:		
Base rf oscillator	349*d*	416
Buffer amplifiers	349*f*	417
Crystal oscillator	345*c*	407
If. amplifier	348*c*	413
Limiters	348*d*	414
Pulsed oscillator	347*c*	410
.5-mc pulse generator	345*c*	407
Allowable path loss, calculation	44	55
Amplifier-Converter AM–913/TRC:		
Controls	87	124
Description	20	33
Functioning	257	274
Installation	64*d*	90
Presetting controls	110*b*	138
Theory	272–274	277–278
Troubleshooting data	310*g*	312
Tuning	113, 114	139, 141
Amplifier-Converter AM–914/TRC:		
Controls	89	127
Description	19	32
Functioning	258	274
Installation	65*d*	91
Presetting controls	110*b*	138
Theory	275–279	278–279
Troubleshooting data	310*g*	312
Tuning	113, 114	139, 141
AMPLIFIER OUTPUT COUPLING control:		
RF Amplifier AM–912/TRC:		
Adjustments	105*a*, 107	134, 136
Description	81	118
Theory	221	226
RF Amplifier-Multiplier AM–915/TRC:		
Adjustments	95, 105*b*	130, 135
Description	82	119
Theory	224	231
Antenna:		
Alinement	116	142
Antenna Support Mast AB–235/G	68	97
Description	15	24
Dipole adjustments	67	92
Directivity	57*c*	83
Installation	66	92
Lowering and disassembling	380	454
Polarization	35	47
Raising	70	104
Receiving, theory	270	277
System, assembling	69	101
Tables and charts	44*b*	55

	Paragraph	Page
Antenna—Continued		
Technical characteristics	5*e*	10
Transmitting:		
Functioning	197	209
Theory	227	237
Antenna Case CY–1370/TRC	25*h*	40
Antenna Case CY–1371/TRC	25*g*	40
Antenna Reflector Case CY–1385/TRC	25*e*	39
Antenna Reflector Support Case CY–1387/TRC	25*f*	40
Antenna Support Mast AB–235/D	67	92
Antenna system, description	15*b*	26
AN/TCC–3. (*See* Telephone Terminal AN/TCC–3.)		
AN/TCC–3 telephone system:		
Monitoring with	120*b*	146
Similarities to AN/TCC–7 telephone system	185	205
System application	4	4
Theory	184	205
(*See* also Telephone Terminal AN/TCC–3.)		
AN/TCC–5. (*See* Telephone Repeater AN/TCC–5.)		
AN/TCC–7. (*See* Telephone Terminal AN/TCC–7.)		
AN/TCC–7 telephone system:		
Monitoring with	120*c*	146
Similarities to AN/TCC–3 telephone system	185	205
Systems application	4	4
Theory	183	204
(*See* also Telephone Terminal AN/TCC–7.)		
AN/TCC–8. (*See* Telephone Repeater AN/TCC–8.)		
AN/TCC–11. (*See* Telephone Repeater AN/TCC–11.)		
AN/TRC–24. (*See* Radio Set AN/TRC–24.)		
AN/TRC–35. (*See* Radio Terminal Set AN/TRC–35.)		
AN/TRC–36. (*See* Radio Relay Set AN/TRC–36.)		
Arctic climates:		
Lubrication	141*b*	172
Operation	126	150
Assembly of Antenna Support Mast AB–235/G	67	92
Attendant's handset. (*See* Handset H–90/U.)		
Autotransformer. (*See* Transformer TS–167/TRC.)		
Back-to-back connections:		
Radio relay set	76	109
Telephone terminals	4*c*	7
Band-pass filters:		
Characteristics	51	67
Controls	90	128
Description	10	19

	Paragraph	Page
Band-pass filters—Continued		
Final test	356	428
Frequency ranges	64*g*	91
Functioning	195, 256	209, 274
Installation	64*e*	91
Theory	225, 271	232, 277
Base-band amplifier:		
Receiver:		
Functioning	262	275
Theory	287, 289	284, 286
Transmitter:		
Functioning	189	208
Input adjustment	103	133
Theory	215	215
Base-band amplifier plug-in assembly:		
Receiver:		
Description	18*e*	31
Troubleshooting data	310*n*	313
Transmitter:		
Description	9*e*	18
Troubleshooting data	310*e*	312
Base-band, description	31*d*	43
Base rf oscillator:		
Frequency deviation check	375	450
Functioning	191	208
Theory	217	223
Tuning	98, 208*b*	132, 213
B-band tuner:		
Receiver. (*See* Amplifier-Converter AM–913/TRC.)		
Transmitter. (*See* RF Amplifier AM–912/TRC.)		
B+ circuits, checking for shorts	148	175
Bias oscillator	296*a*	292
Bias power supply:		
Functioning	266	276
Theory	296	292
Bias rectifier	296*b*	292
Blower motors:		
Checking	328, 330	388, 389
Theory	249*e*, 299*a*	266, 297
British Wireless Set C–41	131	153
Buffer amplifiers:		
Amplifier-Converter AM–914/TRC:		
Functioning	258*d*	275
Theory	278	279
Transmitter:		
Alinement	347*f*	411
Functioning	192	208
Theory	218, 219	223, 224
Buzzer:		
Receiver:		
Description	87	124
Theory	295, 307	290, 308
Transmitter:		
Description	80	112
Theory	244	260
Cable, test for continuity and shorts	154	186
Cable Assemblies	24	35
Cable connections table	71*a*	105
Cable lead-in loss	44*b*	55
Cable repairs, coaxial type	336	392
Cable, spiral-four. (*See* Spiral-four cable.)		
Cable stub, description and connection	74	107
Cables and connectors, description	24	35
Cabling check	73	107
Calculations:		
General considerations of power:		
Allowable path loss	44	55
Balance	44	55
Path attenuation	45	56
Calibration:		
Receiver	11*a*	20
Transmitter	98	132
Calibrator:		
Functioning	268	276
Theory	298	295
Calibrator plug-in assembly:		
Description	18*g*	31
Troubleshooting data	310*m*	313
Capabilities of Radio Set AN/TRC–24	31	43
Carrier equipment:		
System applications	4	4
Theory	183, 185	204, 205
Cathode follower:		
Functioning	201	211
Theory	231	243
C-band tuner:		
Receiver. (*See* Amplifier-Converter AM–914/TRC.)		
Transmitter. (*See* RF Amplifier-Multiplier AM–915/TRC.)		
Channels:		
Decade channels defined	98*b*	132
Maintenance. (*See* Order-wire.)		
Rf. (*See* Rf channels.)		
Charts. (*See* Tables and charts.)		
Checking:		
Afc motors	329	389
Afc pull-in range (receiver)	363	442
Afc, transmitter	372	449
Base rf oscillator frequency	375	450
B+ circuits for shorts	148	175
Blower motors	328, 330	388, 389
Circuit breakers	332	389
Coupling networks	323	368
Crystal rectifiers	325	387
Directional coupler	105*c*	136
Filters	322	359
Frequency response (transmitter)	374	449
Handset H–90/U	327	388
Interlock circuits for continuity	333	390
Low-power alarm	373	449
Metering circuits (receiver)	360	432
Metering circuits (transmitter)	374	449
Meters	326	388
New equipment	63	88
Order wire	366	443
Receiver base-band frequency response	365*b*	443
Receiver for distortion	367	445

INDEX—(Continued)

	Paragraph	Page
Checking—Continued		
Receiver output	365*a*	442
Relays	324	380
Selectivity, image and spurious response of receiver	361, 362	433, 438
Squelch and alarm (receiver)	364	442
Thermostats	331	389
Transmitter for distortion	378	451
Transmitter order-wire control channel	376	450
Tuning range, receiver tuner	361, 362	433, 438
Checklist, equipment performance	179	193
Checks, initial	78	109
Checks, operating	121	146
Circuit breakers, checking	332	389
Circuit labels	27	41
Coaxial-type cable repairs	336	392
Code, signaling	115	141
Coils, dc resistance	318	336
Components	7	12
Connection links, source voltage. (*See* Source voltage connection link.)		
Connections:		
At radio relay points	76	109
Back-to-back	76, 77	109
Check	73	107
Components of Radio Set AN/TRC–24	71	105
Dropping traffic channels	77	109
Spiral-four cable	74	107
Telephone terminals or repeaters	75	109
Contents of shipping crates	6*b*	11
Control circuit, Power Supply PP–685/TRC	250	266
Control office	117	142
Controls:		
Amplifier-Converter AM–913/TRC	88	127
Amplifier-Converter AM–914/TRC	89	127
Band-pass filters	90	128
Interconnecting Box J–532/U	86	121
Power Supply PP–685/TRC	83	120
Radio Receiver R–417/TRC	87	124
Radio Transmitter T–302/TRC	80	112
RF Amplifier AM–912/TRC	81	118
RF Amplifier-Multiplier AM–915/TRC	82	119
Switch Box SA–331/U	85	121
Transformer TF–167/TRC	84	121
(*See* also listing by control name.)		
Conversion of sea-level elevations to line-of-sight elevations	41*b*	51
Coupling networks, checking	323	368
Crates:		
List of contents	7*c*	13
Weights and volumes	6*a*	11
Crossing systems, selection of operating frequencies	55, 56	77, 78
Cross polarization	56*a*, 57*a*	78, 83
Crystal oscillator:		
Functioning	199	210
Theory	228	237
Crystal oscillator plug-in assembly:		
Description	9*f*	18
Troubleshooting data	310*f*	312
Crystal rectifiers, checking	325	387
C–41, British Wireless Set	122	149
DC resistance of coils, transformers, and relays	318	336
DC TEST switch:		
Adjustments	97, 105	131, 134
Description	83	120
Theory	251*b*, 253	268, 272
DC VOLTS meter:		
Circuit	253	268
Description	83	120
DD Form 6	2	3
Decode channel, definition	98*b*	132
De-emphasis circuit:		
Receiver	286*f*	284
Transmitter	239*d*	250
Demolition:		
General	384	455
Methods	385	455
Desert climates:		
Lubrication	141*d*	173
Operation	128	150
Detailed lubrication instructions	139	158
Diffraction of radio waves	33*d*	45
Dimensions of shipping crates	6*a*	11
Dipole adjustments (antenna)	69	101
Directional coupler:		
Checking	105*c*	136
Functioning	196	209
Theory	226	234
Disassembly:		
Antenna and antenna support	381	454
Receiver tuners	324*b*	380
RF Amplifier AM–912/TRC	338	392
RF Amplifier-Multiplier AM–915/TRC	339	396
Shipment and storage	380	454
Discriminator:		
Receiver. (*See* Receiver discriminator.)		
Transmitter. (*See* Afc discriminator.)		
DISCR CENTER control:		
Adjustments	97	131
Description	80	112
DISCR RF DRIVE control:		
Adjustment	102	133
Description	80	112
Theory	238	248
Distortion:		
Final test of receiver	367	445
Final test of transmitter	378	451
Double Abm Plan	56*b*	78
Driver:		
Functioning	193	209
Theory	220	224
Tuning	104	133

INDEX—(Continued)

	Paragraph	Page
DRIVER TUNE control:		
Adjustments	104, 107	133, 136
Description	80	112
Theory	220	224
Dropping traffic channels in radio system	4	4
Dummy filters:		
Description	11	20
Theory	195*b*	209
Dust cover	80	112
Earth, smooth:		
Described	45	56
Path loss over	46	57
Propagation over	34*a*	45
Electrical power requirements	29	41
Electronic Multimeter ME–6/U, use	30, 129	42, 150
Emergency stopping procedure	124	149
Equipment connections	71*a*	105
Equipment performance checklist	178, 179	192, 193
Excessive system noise, operation with	129	150
Exterior preventive maintenance, performing	137	155
Factors affecting transmission in frequency range from 50 to 600 mc	37	48
Factors to be considered, system planning	61	87
False ringing, safeguard against	301*b*	301
Field methods of minimizing interference	58	83
FIL lamp (amber), description	83	120
Filter Kit MK–123/TRC	7*c*	13
Filter Kit MK–124/TRC	7*c*	13
Filters:		
Band-pass. (*See* band-pass filters.)		
Checking	322	359
Dummy. (*See* Dummy filter.)		
Final test:		
Afc if. amplifier plug-in assembly	348	413
Alarm amplifier plug-in assembly	350	420
Amplifier-Converter AM–913/TRC	361	433
Amplifier-Converter AM–914/TRC	362	438
Autotransformer	355	428
Band-pass filters	356	428
Calibrator plug-in assembly	352	421
Crystal oscillator plug-in assembly	345	407
General instructions	342	403
Limiter-discriminator afc plug-in assembly	354	424
Power Supply PP–685/TRC	368, 370	446, 447
Pulsed oscillator plug-in assembly	347	410
Radio Receiver R–417/TRC	357, 367	431, 445
Radio Transmitter T–302/TRC	371, 378	448, 451
Receiver if. amplifier plug-in assembly	353	422
Receiver power supply plug-in assembly	351	420
Rf exciter plug-in assembly	349	416
Transmitter base-band amplifier plug-in assembly	344	404
60-cps modulator plug-in assembly	346	409
Forms:		
Records	2	3
Use of preventive maintenance	136	155
Forward power, defined	226*b*	235
FREQ DRIFT meter:		
Receiver:		
Description	87	124
Functioning	261	275
Transmitter:		
Description	80	112
Functioning	205*b*	212
Frequencies, operating. (*See* Selection of operating frequencies.)		
Frequency check, base rf oscillator	375	450
Frequency doubler. (*See* Driver and Multiplier.)		
Frequency Meter FR–6/U, use	29*b*, 122	41, 149
Frequency range from 50 to 600 mc:		
Factors affecting transmissions in	37	48
Operational advantages	36	48
Frequency range, use of low	38	48
Frequency response, transmitter, checking	377	451
Fresnel patterns, cause	33*e*	45
Fungiproofing and moistureproofing after repairs	143	173
General calculation of path attenuation	45	56
General demolition instructions	382	455
General power-balance calculation considerations	43	55
General precautions	147	174
General preventive maintenance techniques	135	154
General propagation characteristics	32	44
General siting considerations	40	50
General starting procedure	92	129
General system planning	39	49
General techniques of preventive maintenance	135	154
Gin pole:		
Assembling	67	92
Raising	68	97
GRID control:		
Adjustments	95, 105	130, 134
Description	81	118
Ground Rod MX–148/G:		
Description	25*j*	40
Installation	65	91
Ground wave	32*b*	44
Guard band	52	67
Handset H–90/U:		
Checking	327	388
Description	25*a*	39
Theory	302, 303	302, 303
Use	115	141
High-voltage power supply	251	268
Horizontal polarization, advantages	35*c*	47
Horizontal ridge obstruction:		
Described	45	56
Estimated path loss over	48	63

INDEX—(Continued)

	Paragraph	Page
Identification table of parts (not included in this manual).		
If. amplifiers.		
Receiver. (*See* Receiver if. amplifier.)		
Transmitter. (*See* Afc if. amplifier.)		
Image response of receiver, checking	361, 362	433, 438
INCR OUT switch:		
Adjustment	91, 93	129, 130
Description	84	121
Theory	248	265
INDEX control:		
Amplifier-Converter AM–913/TRC:		
Adjustments	110, 113	138, 139
Description	88	127
Amplifier-Converter AM–914/TRC:		
Adjustments	110, 113	138, 139
Description	89	127
Transmitter:		
Adjustments	95, 98	130, 132
Description	80	112
Initial checks	78	109
INPUT ADJ control:		
Adjustment	91	129
Description	80	112
Theory	214*e*	215
Input circuits:		
Functioning	188	208
Theory	214	215
Inspection, visual	153	186
Installation instructions	64, 66	88, 92
Interconnecting Box J–532/U:		
Control	86	121
Description	21	33
Functioning	213*b*	214
Theory	247	265
Troubleshooting data	310*t*	314
Interconnecting systems, selection of operating frequencies	55, 56	77, 78
Interference, field methods of minimizing	58	83
Interior preventive maintenance, performing	138	158
Interlock circuit:		
Receiver:		
Checking	333*b*	390
Theory	299*a*	297
Transmitter:		
Checking	333*a*	390
Theory	250	266
Interoperation with British Wireless Set C–41	122	149
Irregular terrain:		
Described	45	56
Propagation over	34*b*	46
Jump:		
Allowable loss per	44	55
Definition	39*a*	49
J–532/U. (*See* Interconnecting Box J–532/U.)		
Limiter-discriminator-afc plug-in assembly:		
Description	18*d*	31
Troubleshooting data	310*o*	313
Limiters:		
Order-wire:		
Functioning	300*b*	300
Theory	302*b*	302
Receiver. (*See* Receiver limiters.)		
Transmitter. (*See* Afc limiters.)		
Line-of-sight, determining from profile graph	42	54
Line-up:		
Overall	119	145
Radio system	118	143
System	117	142
Linear graph paper, plotting profile on	41*b*	51
List of crates	6*a*	11
Local oscillator:		
Amplifier-Converter AM–913/TRC:		
Functioning	257*c*	274
Theory	273	278
Amplifier-Converter AM–914/TRC:		
Functioning	258*c*	275
Theory	277	279
Location of equipment at site	62	87
LOCK control:		
Adjustment	95, 98	130, 132
Description	80	112
Long transmission paths, obstacles used to obtain	51	67
Loss per jump, allowable	45	56
Loss or gain at various output powers	44*b*	55
Lowering antenna	381	454
Low frequency range, use	38	48
Low-power alarm:		
Adjustment	106	136
Functioning	212	214
Theory	244	260
Low-power alarm plug-in assembly:		
Description	9*j*	19
Troubleshooting data	310*j*	312
Low-power alarm test	371	448
LOW PWR ALARM lamp (red):		
Description	80	112
Theory	244	260
Low system noise, operation with	129	150
Low-voltage power supply:		
Power Supply PP–685/TRC	252	270
Radio Receiver R–417/TRC. (*See* Receiver power supply.)		
Low voltage rectifier plug-in assembly:		
Description	14*c*	24
Troubleshooting data	310*r*	313
Lubrication:		
Detailed instructions	139	158
Of parts by manufacturer	140	172
Under unusual conditions	141	172

	Paragraph	Page
Maintenance:		
Field. (*See* Field maintenance.)		
Organizational. (*See* Organizational maintenance.)		
Preventive. (*See* Preventive maintenance.)		
Mast AB–235/G, description	15*a*	24
MEASURE meter:		
Receiver, description	87	124
Transmitter, description	80	112
MEASURE meter circuit:		
Receiver:		
Adjustment	114*p*	141
Checking	360	432
Functioning	267	276
Theory	297	292
Transmitter:		
Adjustment	101	133
Checking	374	449
Functioning	209	213
Sensitivity adjustment	344*g*	406
Theory	242	353
MEASURE switch:		
Receiver:		
Adjustments	112–114	138–141
Description	87	124
Theory	297	292
Transmitter:		
Adjustments	95–114	130–141
Description	80	112
Theory	242	253
Measuring voltage and resistance	317	319
Meter amplifier:		
Receiver	297*g*	294
Transmitter	242*d*	254
Metering circuits checking:		
Receiver	360	432
Transmitter	374	449
Meters, checking	326	388
Methods of destruction (*See* also Demolition.)	385	455
ME–6/U, Electronic Multimeter	29, 129	41, 150
ME–82/U. (*See* Wattmeter ME–82/U.)		
Microphone amplifier:		
Functioning	300*c*	300
Theory	302*c*	303
Minimum frequency separation	52	67
Mixer:		
Afc. (*See* Afc mixer.)		
Amplifier-Converter AM–913/TRC:		
Functioning	257*d*	274
Theory	274	278
Amplifier-Converter AM–914/TRC:		
Functioning	258*e*	275
Theory	279	279
MOD ADJ control:		
Adjustment	103	133
Description	80	112
Theory	214*e*, 242*j*	215, 257
MOD TRIM control:		
Adjustment	103	133
Description	80	112
Theory	216*a*	218
Modulator, reactance. (*See* Reactance modulator.)		
Moistureproofing and fungiproofing after repairs	143	173
Monitoring procedure	120	146
MTR CAL control:		
Adjustment	101, 112	133, 138
Description	80	112
Theory	242*d*	254
MTR SENS switch:		
Adjustment	103	133
Description	80	112
Theory	242*j*	257
Multiplier	223	230
MULTIPLIER GRID control:		
Adjustment	95, 105*b*	130, 135
Description	82	119
Theory	222	227
MULTIPLIER OUTPUT COUPLING control:		
Adjustments	95, 105*b*	130, 135
Description	82	119
Theory	223	230
MULTIPLIER PLATE control:		
Adjustments	95, 105*b*	130, 135
Description	82	119
Theory	222	227
MX–148/G, Ground Rod:		
Description	25*j*	40
Installation	65	91
New equipment, checking	63	88
Noise:		
Measurements	118*e*	144
Operation with excessive or low system	129	150
Nomenclature assignments	8	15
Nonlinear graph paper, plotting profiles on	41*a*	50
Obstacles:		
Described	45	56
Propagation over	34*c*	47
Use of to obtain long transmission paths	50	66
Odd and even situation:		
Described	55*b*	78
Solution	56*a*	78
Operating checks	121	146
Operating frequencies. (*See* selection of operating frequencies.)		
Operation:		
Arctic climates	126	150
Characteristics, system	60	85
Desert climates	128	150
Tropical climates	127	150
Under unusual conditions, general	125	150

INDEX—(Continued)

	Paragraph	Page
Operation—Continued		
With British Wireless Set C–41	122	149
With excessive system noise	129*a*,*b*	150, 151
With low system noise	129*c*,*d*	151
Without afc	130	151
Operational advantages of frequency range from 50 to 600 mc	36	48
Operational test	313	314
Order-wire channel, use	115	141
Order-wire checking	364	442
Order-wire circuits:		
Functioning	300	300
Theory	302, 303	302, 303
Organizational maintenance:		
Troubleshooting procedures	175	190
Troubleshooting, scope	145	174
Troubleshooting, test equipment required	176	191
OSC COARSE control:		
Adjustment	110, 113	138, 139
Description	89	127
OSC FINE control:		
Adjustment	113, 114	139, 141
Description	89	127
Oscillator:		
Base rf. (*See* Base rf oscillator.)		
Bias. (*See* Bias oscillator.)		
Calibrator. (*See* Calibrator.)		
Crystal. (*See* Crystal oscillator.)		
Local. (*See* Local oscillator.)		
Pulsed. (*See* Pulsed oscillator.)		
1-kc. (*See* 1-kc oscillator.)		
OUTPUT ADJ control:		
Adjustments	110	138
Description	87	124
Theory	287	284
Output, checking receiver	365*a*	442
Output power. (*See* Power output.)		
Packaging data	6	11
Painting and rustproofing	144	173
Pairing	56*a*(3)(*b*)	78, 81
Parallel systems, selection of operating frequencies	54	77
Parts lubricated by manufacturer	140	172
Path attenuation:		
General calculation	45	56
Gently rolling terrain	47	57
Horizontal ridge obstruction	48	63
Rugged terrain	49	64
Smooth earth or water	46	57
Path, definition	39*a*	49
Path loss:		
Calculation of allowable	44	55
For antennas beyond line-of-sight (*See* also Path attenuation.)	47	57
Performing:		
Exterior preventive maintenance	137	155
Interior preventive maintenance	138	158
Signal substitution	320	339
Phone amplifiers:		
Functioning	300*f*	300
Theory	303	303
Planning radio system. (*See* System planning.)		
PLATE control:		
Adjustments	95, 105*a*	130, 134
Description	81	118
Plotting profiles	41	50
Plug-in assemblies:		
Final test. (*See* Final test.)		
Removal of, general	155	187
Polarization:		
Cross	56*a*, 57*a*	78, 83
Horizontal, advantages	35*c*	47
Vertical, advantages	35*b*	47
Power Accessories Kit MK–122/TRC	7*b*	12
Power amplifier	224	231
POWER AMPLIFIER GRID control:		
Adjustments	95, 105*b*	130, 135
Description	82	119
POWER AMPLIFIER PLATE control:		
Adjustments	105*b*, 107	135, 136
Description	82	119
Theory	224	231
Power-balance calculations, general considerations	41	50
POWER lamp (amber), description	87	124
Power output, adjustment	107	136
Power requirements, electrical	28	41
Power supply, high-voltage	251	268
Power supply, receiver. (*See* Receiver power supply.)		
POWER SUPPLY switch:		
Description	85	121
Theory	246	263
Power Supply PP–685/TRC:		
Connections	71	105
Control circuit	250	266
Controls	83	120
Description	14	23
Functioning	213*d*	214
Technical characteristics	5*b*	10
Test equipment required	369	447
Theory	249–254	265–272
Troubleshooting chart	315	315
Troubleshooting data	310*d*	311
POWER switch:		
Description	87	124
Theory	299	297
Power Unit PU–286/G description	16	26
Pre-emphasis circuit	214	215
Preliminary starting procedure	91	129
Preventive maintenance:		
Definition	134	154
General techniques	135	154
Forms	136	155
Performing exterior	137	155
Performing interior	138	158

381345 O—56——31

	Paragraph	Page
Profile graphs:		
Determining line-of-sight from	42	54
Plotting	41	50
Propagation:		
General characteristics	32	44
Over irregular terrain	34*b*	46
Over obstacles	34*c*	47
Vhf band	34	45
Wave phenomena	33	44
Pulsed oscillator:		
Functioning	202	211
Theory	232	243
Pulsed oscillator plug-in assembly:		
Description	9*g*	18
Troubleshooting data	310*b*	311
PULSED OSC switch:		
Adjustments	95	130
Description	80	112
Theory	232, 239*f*	243, 250
PULSED OSC TUNE control:		
Description	80	112
Theory	232	243
Pulse generator:		
.5 mc. (*See* .5-mc pulse generator.)		
2.5 mc. (*See* 2.5-mc pulse generator.)		
Purpose and use	3	3
PU–286/G. (*See* Power Unit PU–286/G.)		
Quieting. (*See* Squelch.)		
Radio Receiver R–417/TRC:		
Controls	87	124
Description	18	28
Operating checks	121*b*	146
Starting procedure	109–113	137–139
Technical characteristics	5*c*	10
Test equipment required	360	432
Theory of operation	255–299	274–297
Troubleshooting chart	316	317
Troubleshooting data	310*b*	311
Tuning	114	141
Radio Relay Set AN/TRC–36:		
Connections	76	109
Description	3, 7	3, 12
Table of components	7*b*	12
Radio Set AN/FRC–29	3*c*	4
Radio Set AN/TRC–24:		
Capabilities	31	43
Connections of components	71	105
Functioning	186	206
Operating checks	121	146
Special tools issued with	132	153
Table of components	7	12
Technical characteristics	5	10
Theory of operation	187–308	208–308
Tools and materials supplied with	131	153
Radio Set Group OA–483/TRC, table of components	7*c*	13
Radio system:		
Definition	39*a*	49
Dropping channels in	4	4
Line-up	118	143
Planning. (*See* System planning.)		
With radio relay set	4	4
Without radio relay set	4	4
Radio Terminal Set AN/TRC–35	3*b*, 4	3, 4
Table of components	7*b*	12
Radio Transmitter T–302/TRC:		
Controls	80	112
Description	9	16
Final test	371–378	448–451
Operating checks	121*b*	146
Starting procedure	94–108	130–137
Technical characteristics	5*a*	10
Theory of operation	214–254	215–272
Troubleshooting chart	315	315
Troubleshooting data	310*a*	311
Tuning	98–108	132–137
Radio waves	33	44
Raising:		
Antenna	70	104
Gin pole	68	97
Reactance modulator:		
Functioning	190	208
Theory	216	218
Receiver. (*See* Radio Receiver R–417/TRC.)		
Receiver afc circuits. (*See* Afc circuits, receiver.)		
Receiver afc motor	272, 277, 293	277, 279, 287
Receiver afc pull-in range, checking	363	442
Receiver ALARM switch. (*See* ALARM switch, receiver.)		
Received base-band amplifier. (*See* Base-band amplifier, receiver.)		
Receiver base-band amplifier plug-in assembly. (*See* Base-band amplifier plug-in assembly, receiver.)		
Receiver base-band frequency response, checking	365	442
Receiver circuits, defined	255	274
Receiver discriminator:		
Alinement	354*f*	425
Functioning	261	275
Theory	286	283
Receiver FREQ DRIFT meter. (*See* FREQ DRIFT meter, receiver.)		
Receiver if. amplifier:		
Alinement	353*e*	423
Functioning	259	275
Theory	280–283	280–281
Receiver if. amplifier plug-in assembly:		
Description	18*c*	31
Troubleshooting data	310*p*	313
Receiver limiters:		
Alinement	354*c*	424
Functioning	260	275
Theory	284, 285	281, 282
Receiver output, checking	365*a*	442

INDEX—(Continued)

	Paragraph	Page
Receiver power supply:		
Functioning	269	277
Theory	299	297
Receiver power supply plug-in assembly:		
Description	18*f*	31
Troubleshooting	310*l*	312
Reconditioned equipment, service upon receipt	79	111
Records. (*See* Forms.)		
Rectifier, bias	296*b*	292
Re-entrancy situation	55*c*	78
Reference symbol numbers	146	174
Refinishing	337	392
Reflected power, defined	226*b*	235
Reflection of radio waves	33	44
Relays:		
Checking	324	380
D-c resistance	318	336
Removal:		
And replacement of air filter in receiver	173	190
And replacement of blower motor in receiver	174	190
Alarm circuit plug-in assembly from transmitter	163	189
Band-pass filter or dummy filter from receiver or transmitter	166	189
Base-band amplifier plug-in assembly from receiver	169	190
Base-band amplifier plug-in assembly from transmitter	157	187
Calibrator plug-in assembly from receiver	168	190
Crystal oscillator plug-in assembly from transmitter	158	187
Crystal rectifiers CR102 and CR103 from directional coupler	164	189
If. amplifier plug-in assembly:		
Receiver	171	190
Transmitter	161	188
Limiter-discriminator-afc plug-in assembly from receiver	170	190
Low-voltage plug-in assembly from Power Supply PP-685/TRC	172	190
Plug-in assemblies, general	155	187
Power Supply PP-685/TRC from transit case	156	187
Power supply plug-in assembly from receiver	167	189
Pulsed oscillator plug-in assembly from transmitter	160	188
Receiver from transit case	156	187
Rf exciter plug-in assembly from transmitter	162	188
Tuner from receiver or transmitter	165	189
Transmitter from transit case	156	187
Upper chassis from transmitter	340	400
60-cps modulator plug-in assembly from transmitter	159	188
Repacking for shipment or limited storage	383	455
Repair of coaxial-type cables	336	392
Repeater and multiple terminal points, selection of operating frequencies at	53	76
Repeaters, connections	75	109
Replacement of parts	334	391
Resistance, measuring voltage and	317	319
RF AMP control:		
Amplifier-Converter AM-913/TRC:		
Adjustments	110–114	138–141
Description	88	127
Functioning	257*b*	274
Theory	272	277
Amplifier-Converter AM-914/TRC:		
Adjustments	110–114	138–141
Description	89	127
Functioning	258*b*	274
Theory	275, 276	278, 279
RF Amplifier AM-912/TRC:		
Controls	81	118
Description	12	21
Disassembly	339	396
Functioning	194*b*	209
Installation	64*d*	90
Presetting controls	95*b*	131
Theory	221	229
Troubleshooting data	310*c*	311
Tuning	105*a*	134
RF Amplifier-Multiplier AM-915/TRC:		
Controls	82	119
Description	13	21
Disassembly	339	396
Functioning	194*c*	209
Installation	64d	90
Presetting controls	95*b*	131
Theory	222–224	227–231
Troubleshooting data	310*c*	311
Tuning	105*b*	135
Rf channels:		
Description	31*a*	43
Selection	52–58	67–68
Table	52	67
RF CHANNEL TUNE control:		
Adjustments	95, 98	130, 132
Description	80	112
Theory	217, 218	223
Rf exciter plug-in assembly:		
Description	9*i*	19
Troubleshooting data	310*i*	312
Rf power output	107	136
Ridge obstruction, estimated path loss over horizontal	48	63
Ringer:		
Functioning	301*b*	301
Theory	307	308
Ringer amplifier:		
Functioning	301*b*	301
Theory	304	306
Ringing, safeguard against false	301*b*	301
(*See* also Signaling.)		

INDEX—(Continued)

	Paragraph	Page
RING lamp (white):		
Description	87	124
Theory	307	308
RING-TALK switch:		
Adjustments	115	141
Description	87	124
Theory	302–304, 308	302, 306, 308
Rolling terrain:		
Described	45	56
Estimating path loss over	47	57
Route:		
Definition	39*a*	49
Selection of operating frequencies for isolated	52	67
Rugged terrain:		
Described	45	56
Estimating path loss over	49	64
Running spares	26	40
Rustproofing and painting	144	173
Safeguard against false ringing	301*b*	301
SA–331/U. (*See* Switch Box SA–331/U.)		
Scaffold Tower AB–216/U:		
Application to Radio Set AN/TRC–24	182	203
Description	181	203
Purpose	180	203
Scope of organizational maintenance troubleshooting	145	174
SCREEN VOLTS ADJ control:		
RF Amplifier AM–912/TRC:		
Adjustment	105*a*	134
Description	81	118
RF Amplifier-Multiplier AM–915/TRC:		
Adjustment	105*b*	135
Description	82	119
Theory	251*c*	268
Selection of operating frequencies:		
Multiple terminal and repeater points	53	76
Interconnecting or crossing systems	55, 56	77, 78
Isolated route	52	67
Parallel systems	54	77
Selection of rf channels	52–57	67–83
Selectivity, image, and spurious response of receiver, checking	362	438
Service upon receipt of used or reconditioned equipment	79	111
Shadow loss:		
Horizontal ridge	48	63
Rugged terrain	49	64
Shipment and storage:		
Disassembling	379	454
Repacking	381	454
hipping crates. (*See* Crates.)		
Shorting stick	133	153
Sidetone circuit	300*h*	301
Signaling:		
Circuits:		
Functioning	301	301
Theory	304–308	306–308
Code	115	141
Facilities	185*b*	205
Signal substitution	320	339
Similarities in AN/TCC–3 and AN/TCC–7 telephone systems	185	205
Singing	117	142
Siting:		
General considerations	40	50
Location of equipment at site	62	87
Six-block abm plan	56*a*	78
Sky wave	32*b*	44
Smooth earth:		
Description	45	56
Path loss over	46	57
Propagation over	34*a*	45
Snubit fasteners	69, 70	101, 104
Source voltage connection link:		
Description	86	121
Operation	71*d*	106
Spare parts. (*See* running spares.)		
Special tools:		
Description	18*h*	31
Issued with equipment	132	153
Spiral-four cable:		
Connections	74	107
Frequency characteristics	59*c*	84
Use	59	84
Spurious effects	31*e*	43
Spurious response of receiver, checking	361, 362	433, 438
Squelch and alarm (receiver), checking	364	442
Squelch circuit:		
Functioning	265, 285*b*	276, 282
Theory	295	290
SQUELCH control:		
Adjustment	113*h*, 116	139, 142
Description	87	124
Theory	294	290
Stacking equipment	64	88
Starting procedure:		
General	92	129
Preliminary	91	129
Radio Receiver R–417/TRC	109–114	137–141
Radio Transmitter T–302/TRC	94–108	130–137
Transformer TF–167/TRC	93	130
Stopping procedure	123	149
Emergency	124	149
Storage. (*See* Shipment and storage.)		
Supplementary accessories group	7*c*	13
Support Mast AB–235/G	67	92
Switch Box SA–331/U:		
Control	85	121
Description	22	35
Functioning	213*a*	214
Theory	246	263
Troubleshooting data	310*s*	313
Switches. (*See* Controls.)		
System applications	4	4

	Paragraph	Page
System line-up:		
Overall	119	145
Radio	118	143
System operation characteristics	60	85
System planning:		
Factors to be considered	61	87
General	39	49
System operation characteristics	60	85
System trouble sectionalization	177	191
Table of components	7*b*	12
Tables and charts:		
Allowable loss per jump	44*b*	55
Antenna gain	44*b*	55
Band-pass frequency ranges	64*e*	91
Components	7*c*	12
Components of antenna system	69*a*	101
Connections of cables	71*a*	105
Conversion of sea-level elevations to line-of-sight elevations	41*b*	51
Contents of shipping crates	7*c*	12
Controls. (*See* Controls.)		
Dc resistance of coils, transformers and relays	318	336
Dimensions and weights of cases	7*d*	15
Dimensions of shipping crates	6	11
Equipment connections	71*a*	105
Equipment performance checklist	279	279
Lead-in cable loss	44*b*	55
Loss or gain at various output powers	44*b*	55
Lubrication	139*a*	158
Minimum frequency separation	52	67
Noise measurements	118*e*	144
Nomenclature assignments	8	15
Operating checks	121	146
Path loss for antennas beyond line-of-sight	47	57
Presetting receiver controls	110*a*	138
Presetting receiver tuner controls	110*a*	138
Presetting transmitter controls	95*a*	130
Presetting transmitter tuner controls	95*b*	131
Rf channels	52*d*	71
Running spares	26	40
Signal substitution	320	339
Spiral-four cable frequency characteristics	59*c*	84
System operation characteristics	60	85
Technical characteristics	5	10
Test equipment. (*See* Test equipment required.)		
Troubleshooting charts	315, 316	315, 317
Troubleshooting data	310	311
Vhf path-loss estimation	45	56
TALK-RING switch. (*See* RING-TALK switch.)		
Technical characteristics	5	10
Telephone Repeater:		
AN/TCC–5	184*b*	205
AN/TCC–8	183*c*	204
Telephone Repeater—Continued		
AN/TCC–11	183*d*	205
Connections	75	109
Telephone system. (*See* AN/TCC–3 and AN/TCC–7 telephone systems.)		
Telephone Terminal:		
AN/TCC–3:		
Connections	75	109
Theory	184	205
(*See* also AN–TCC/3 Telephone System.)		
AN/TCC–7:		
Connections	75	109
Theory	183*b*	204
(*See* also AN/TCC–7 Telephone System.)		
Terminal and repeater points, selection of operating frequencies at multiple	53	76
Terrain:		
Affecting siting	40	50
Affecting transmissions	45	56
Terrain, gently rolling:		
Described	45	56
Estimating path loss over	47	57
Terrain, irregular:		
Described	45	56
Propagation over	34*b*	46
Test equipment required:		
Checking circuit elements	321	359
Organizational maintenance troubleshooting	176	191
Signal substitution	319	339
Testing minor components and plug-in assemblies	343	403
Testing Radio Receiver R–417/TRC	358	432
Testing transmitter and power supply	369	447
Troubleshooting	312	314
Test for cable continuity and shorts	154	186
Testing. (*See* Checking.)		
TEST meter, description	80	112
TEST meter circuit:		
Functioning	211	214
Theory	245	262
TEST switch:		
Adjustments	104–107	133–136
Description	80	112
Theory	245	262
TF–167/TRC. (*See* Transformer TF–167/TRC.)		
Theory of operation:		
AN/TCC–3 telephone system	183, 185	204, 205
AN/TCC–7 telephone system	184, 185	205
Band-pass filters	225, 271	232, 277
Dummy filter	195*b*	209
Interconnecting Box J–532/U	247	265
Order-wire circuits:		
Block diagram	300	300
Detailed	302, 303	302, 303
Power Supply PP–685/TRC	249–253	265–272

INDEX—(Continued)

	Paragraph	Page
Theory of operation—Continued		
Radio Set AN/TRC–24:		
Block diagram	186	206
Detailed	187–308	208–308
Receiver circuits:		
Block diagram	255–269	274–277
Detailed	270–299	277–297
Signaling circuits:		
Block diagram	301	301
Detailed	304–308	306–308
Switch Box SA–331/U	246	263
Transformer TF–167/TRC:		
Block diagram	213*c*	214
Detailed	248	265
Transmitter circuits:		
Block diagram	187–213	208–214
Detailed	214–254	215–272
Thermostats, checking	331	389
THRESHOLD ADJ control:		
Adjustment	106, 107	136, 136
Description	80	112
Theory	244	260
Tools and materials supplied with Radio Set AN/TRC–24	131	153
Tools, special	18*h*, 132	31, 153
Traffic channels, connections dropping	7	12
Transformer TF–167/TRC:		
Control	84	121
Description	17	26
Final test	355	424
Functioning	213*c*	214
Starting procedure	93	130
Technical characteristics	5*d*	10
Theory	248	265
Troubleshooting data	310*u*	314
Transformers, dc resistance	318	336
Transmitter. (*See* Radio Transmitter T–302/TRC.)		
Transmitter afc circuits. (*See* Afc circuits, transmitter.)		
Transmitter AFC control	80	112
Transmitter afc motor	207	212
Transmitter afc operation check	99	133
Transmitter afc test	372	449
Transmitter ALARM switch. (*See* ALARM switch, transmitter.)		
Transmitter base-band amplifier. (*See* Base-band amplifier, transmitter.)		
Transmitter base-band amplifier plug-in assembly. (*See* Base-band amplifier plug-in assembly, transmitter.)		
Transmitter circuits, defined	187	208
Transmitter FREQ DRIFT meter. (*See* FREQ DRIFT meter, transmitter.)		
Transmitter order-wire control channel, checking	376	450
Transmitter power supply	213	214
Triangle situation:		
Described	55*a*	77
Solution	56*a*	78
Tropical climates:		
Lubrication	141*c*	173
Operation	127	150
Trouble sectionalization, system	177	191
Troubleshooting:		
Charts	315, 316	315, 317
Charts, using	314	314
Data	310	311
Field maintenance. (*See* Field maintenance troubleshooting.)		
Organizational maintenance. (*See* Organizational maintenance troubleshooting.)		
Procedures	309	310
Using equipment performance checklist	178	192
Tube testing	152	177
Tube 4X–150A:		
RF Amplifier AM–912/TRC, removal and replacement	150	177
RF Amplifier-Multiplier AM–915/TRC, removal and replacement	149	176
Tube 4X–150G:		
RF Amplifier-Multiplier AM–915/TRC, removal and replacement	151	177
Tuner:		
Receiver B-band. (*See* Amplifier-Converter AM–913/TRC.)		
Receiver C-band. (*See* Amplifier-Converter AM–914/TRC.)		
Transmitter B-band. (*See* RF Amplifier AM–912/TRC.)		
Transmitter C-band. (*See* RF Amplifier-Multiplier AM–915/TRC.)		
Tuner case, description	25*i*	40
Tuning:		
Amplifier-Converter AM–913/TRC	113, 114	139, 141
Amplifier-Converter AM–914/TRC	113, 114	139, 141
Band-pass filters	107*b*	137
Base rf oscillator	98	132
Driver	104	133
Radio Receiver R–417/TRC	114	141
Radio Transmitter T–302/TRC	98–108	132–137
RF Amplifier AM–912/TRC	105*a*	134
RF Amplifier-Multiplier AM–915/TRC	105*b*	135
Tuning range, receiver tuner, checking	361, 362	433, 438
Two-block method of selecting frequencies	52*c*	70
T–302/TRC. (*See* Radio Transmitter T–302/TRC.)		
Unpacking, uncrating and checking new equipment	63	88
Unusual conditions:		
Lubrication under	141	172
Operation under	125	150

	Paragraph	Page
USAF Form 54	2	3
Use of low frequency range	38	48
Used equipment, service upon receipt	79	111
Vertical polarization, advantages	35*b*	47
Vhf band, propagation in	34	45
Vhf path-loss estimation	45	56
Vibration mount lock control	80	112
Visual inspection	153	186
Voltage and resistance measurements	317	319
Water:		
Path loss over	46	57
Propagation over	34*a*	45
Wattmeter ME–82/U:		
Description	23	35
Theory	254	272
Troubleshooting data	310*v*	314
Wave propagation phenomena	33	44
Weatherproofing	142	173
Weights and volumes of shipping crates	6	11
Wireless Set C–41	122	149
Wiring diagrams, using	311	314
XTAL SEL switch:		
Adjustment	95–98	130–132
Description	80	112
Theory	228–233	237–246
Xy plan	56*c*	82

NUMERICALLY NAMED ITEMS

	Paragraph	Page
2.5-mc pulse generator:		
Functioning	200	211
Theory	229	240
1KC ADJ control:		
Adjustment	100, 114	133, 141
Description	80	112
Theory	243*b*	260
1-kc oscillator:		
Adjustment	100	133
Functioning	210	213
Frequency adjustment	344*e*	405
Theory	243	257
2.5-mc pulse generator:		
Functioning	208*b*(2)	213
Theory	230	243
4X–150A. (*See* Tube 4X–150A.)		
4X–150G. (*See* Tube 4X–150G.)		
60-cps amplifier:		
Transmitter:		
Functioning	206*b*	212
Theory	241	253
Receiver, theory	291–293	287
60-cps modulator:		
Transmitter:		
Functioning	206*a*	212
Theory	240	253
Receiver, theory	290	287
60-cps modulator plug-in assembly:		
Description	9*h*	19
Troubleshooting data	310*g*	312
68KC TUNE control	297*i*	295
115V AC switch:		
Description	83	120
Theory	249	265
150V ADJ control:		
Adjustments	97	131
Description	83	120
Theory	252	270
150V DC lamp (amber):		
Description	83	120
Theory	252	270
150V DC switch:		
Adjustment	97	131
Description	83	120
Theory	252	270
600 OHMS–135 OHMS switch:		
Adjustment	114	141
Description	87	124
Theory	214*a*	215
750V ADJ switch:		
Adjustment	104, 105	133, 134
Description	83	120
Theory	251	268
750 DC lamp (amber):		
Description	83	120
Theory	251	268
750V DC switch:		
Adjustment	104, 107	133, 136
Description	83	120
Theory	251	268
1,000-cps rectifier:		
Functioning	301*b*	301
Theory	306	306
1,600-cps oscillator:		
Functioning	301*c*	302
Theory	308	308
1,600-cps rectifier:		
Functioning	301*b*	301
Theory	305	306
1,600 TUNE control	305	306

U. S. GOVERNMENT PRINTING OFFICE: 197

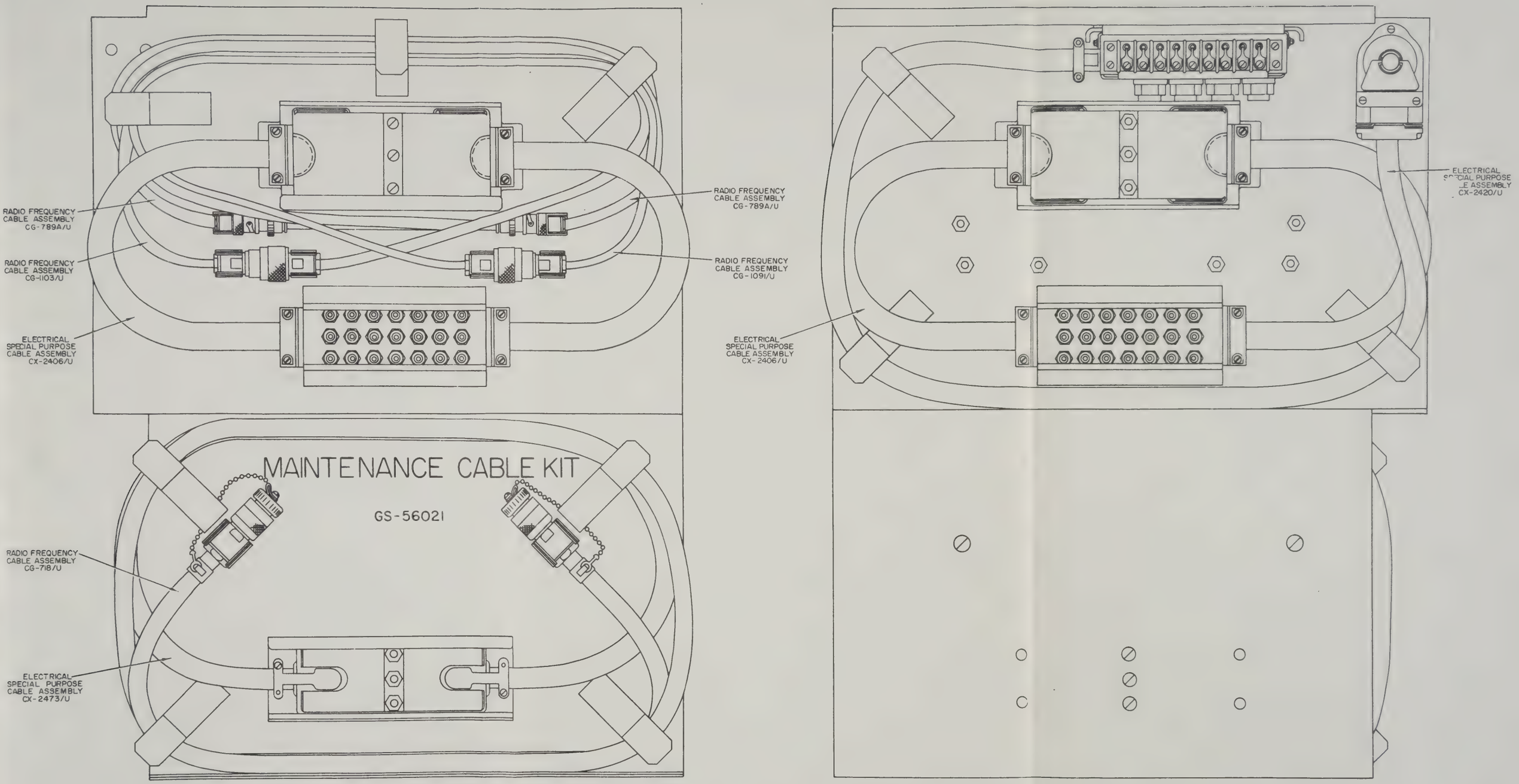

TM687-49

Figure 30. Maintenance cable holding frame for Accessories Case CY-1343/TRC, left and right side views.

381345 O - 56 (In pocket)

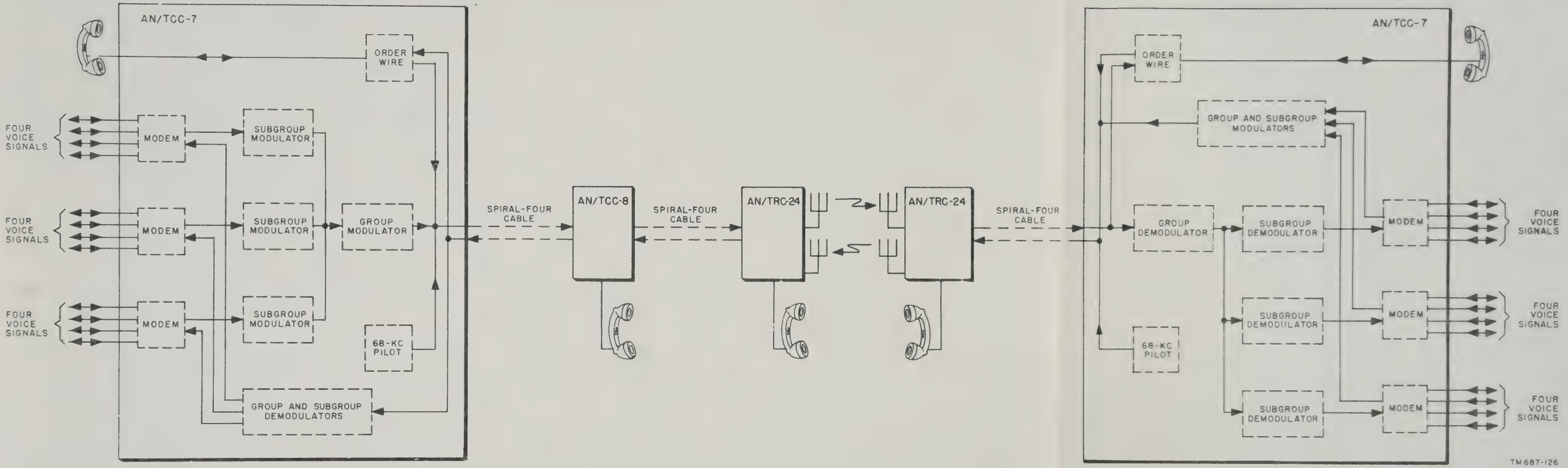

Figure 134. Telephone carrier system, AN/TCC–7, combined with Radio Set AN/TRC–24, block diagram.

381345 O - 58 (In pocket)

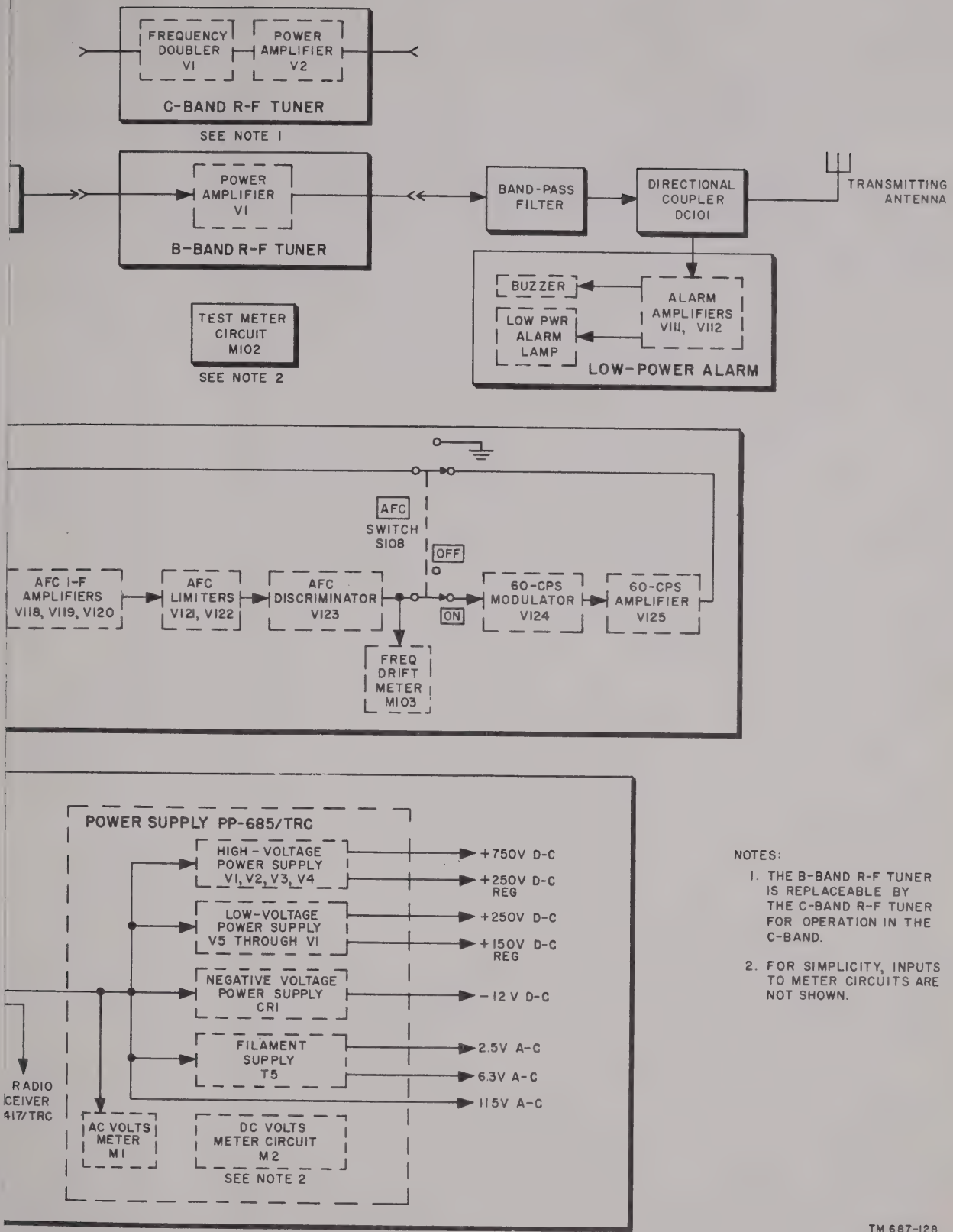

NOTES:

1. THE B-BAND R-F TUNER IS REPLACEABLE BY THE C-BAND R-F TUNER FOR OPERATION IN THE C-BAND.
2. FOR SIMPLICITY, INPUTS TO METER CIRCUITS ARE NOT SHOWN.

TM 687-128

cuits, block diagram.

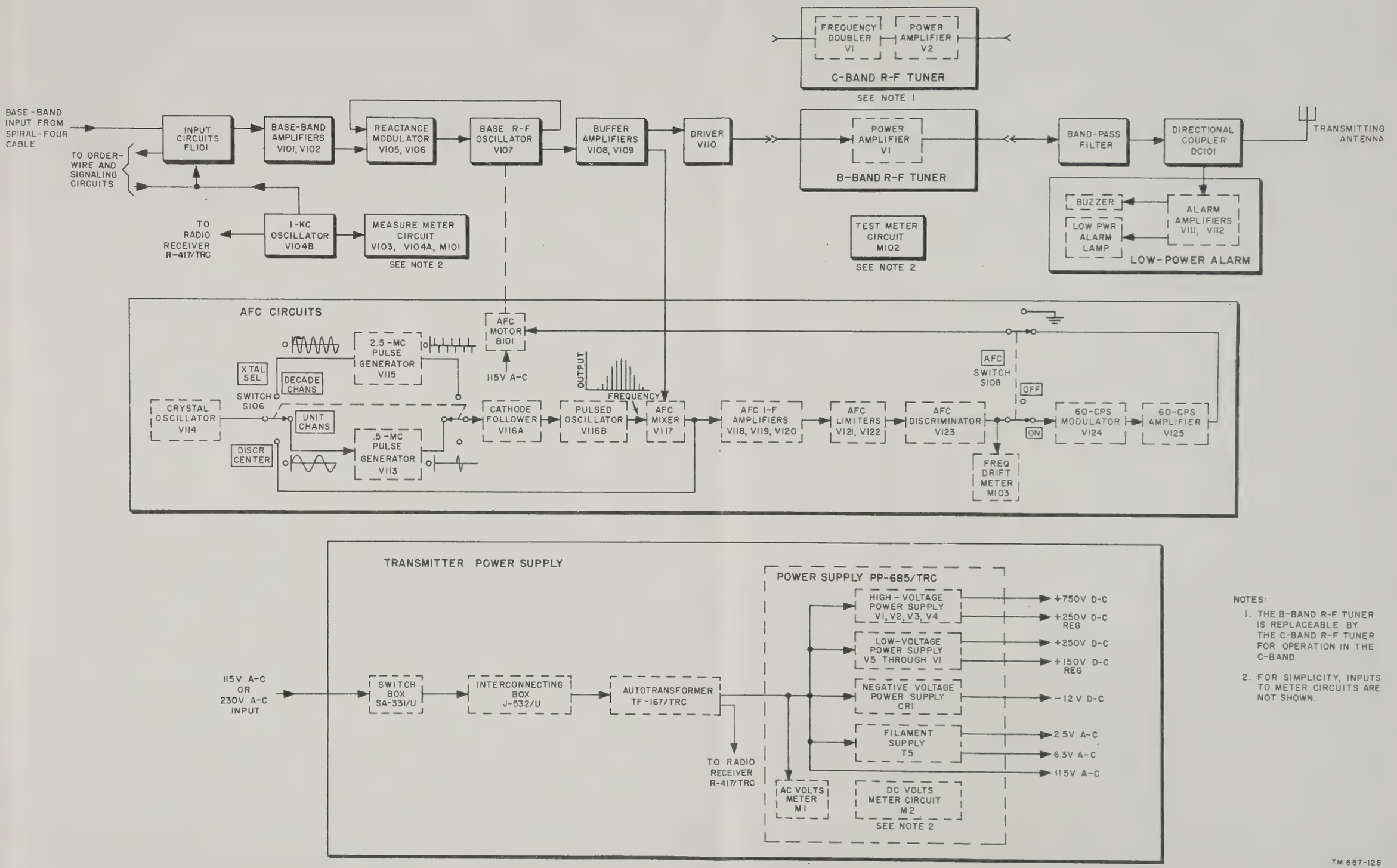

Figure 136. Transmitter circuits, block diagram.

NOTES:

1. THE B-BAND R-F TUNER IS REPLACEABLE BY THE C-BAND R-F TUNER FOR OPERATION IN THE C-BAND.
2. FOR SIMPLICITY, INPUTS TO METER CIRCUITS ARE NOT SHOWN.

TM 687-128

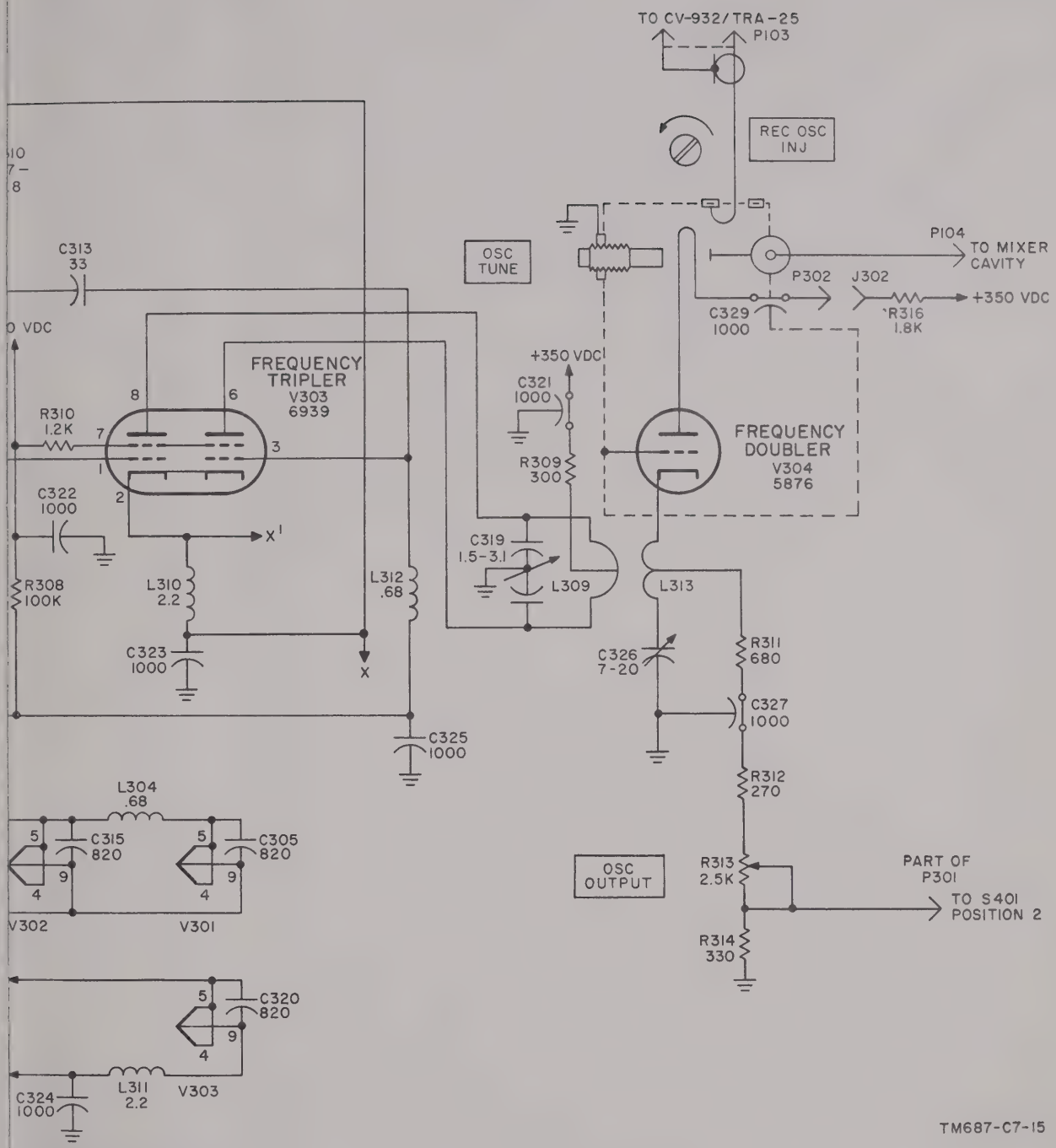

) Oscillator-Multipliers O-734/TRA-25, schematic diagram.

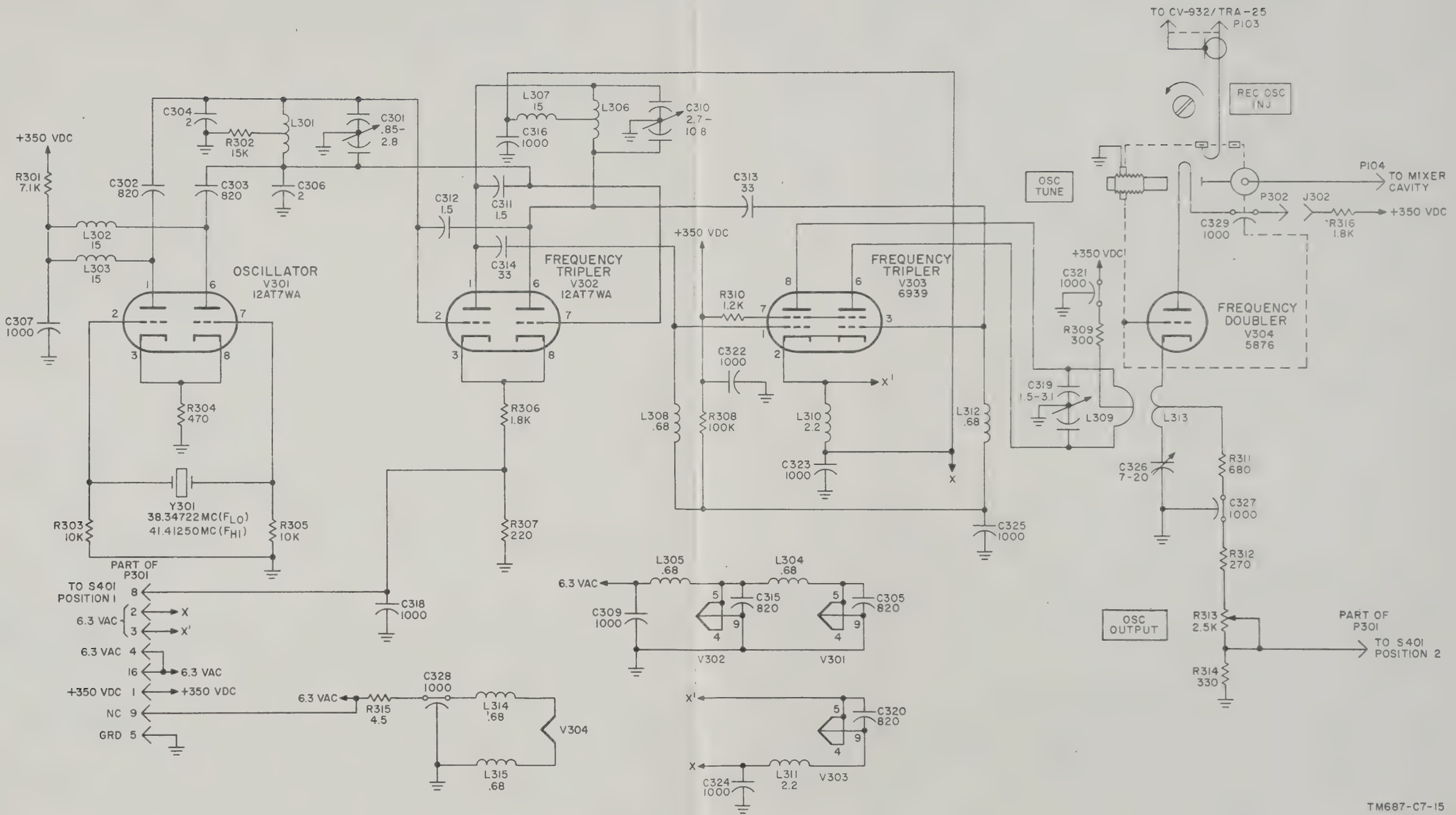

Figure 144.2. (Added) *Oscillator-Multipliers O-734/TRA-25 and O-735/TRA-25, schematic diagram.*

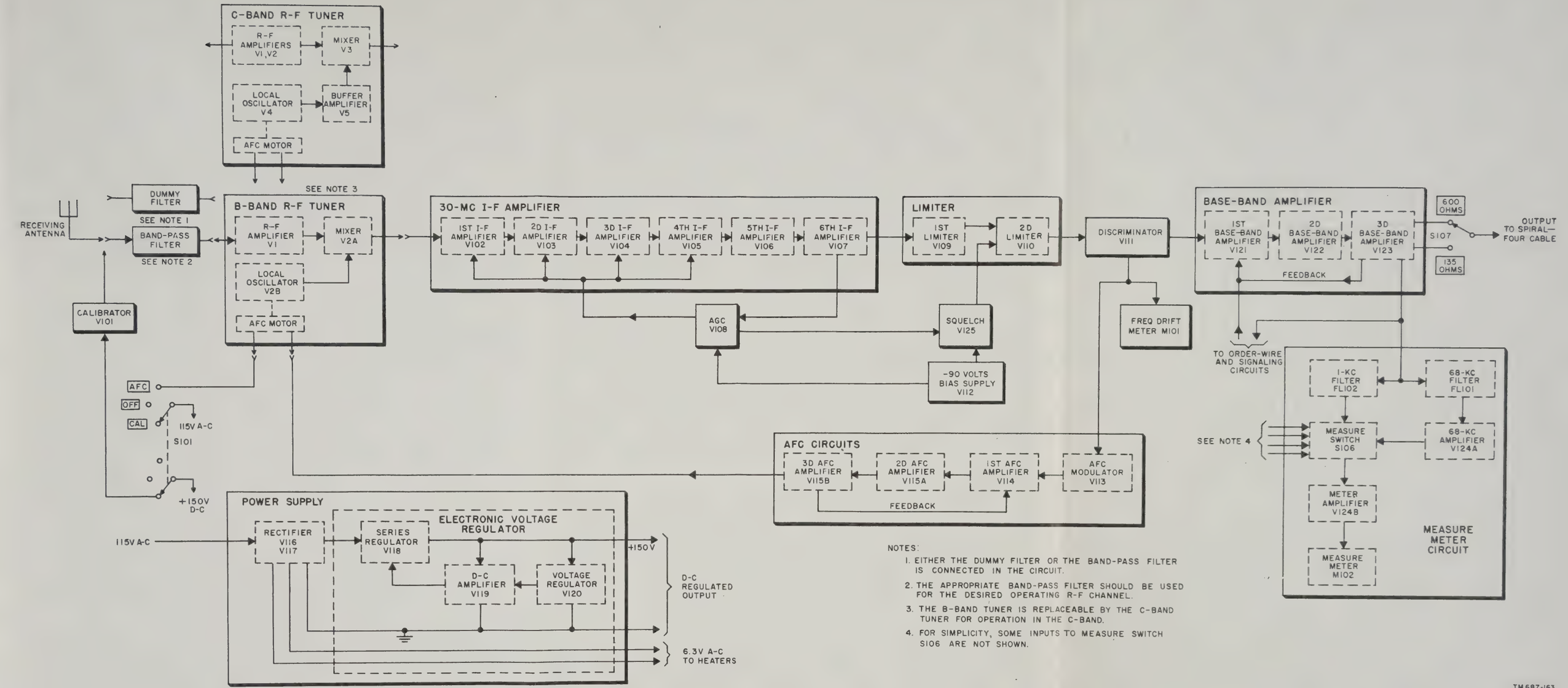

NOTES:

1. EITHER THE DUMMY FILTER OR THE BAND-PASS FILTER IS CONNECTED IN THE CIRCUIT.
2. THE APPROPRIATE BAND-PASS FILTER SHOULD BE USED FOR THE DESIRED OPERATING R-F CHANNEL.
3. THE B-BAND TUNER IS REPLACEABLE BY THE C-BAND TUNER FOR OPERATION IN THE C-BAND.
4. FOR SIMPLICITY, SOME INPUTS TO MEASURE SWITCH S106 ARE NOT SHOWN.

Figure 174. Receiver circuits, block diagram.

TM 687-163

381345 O - 56 (In pocket)

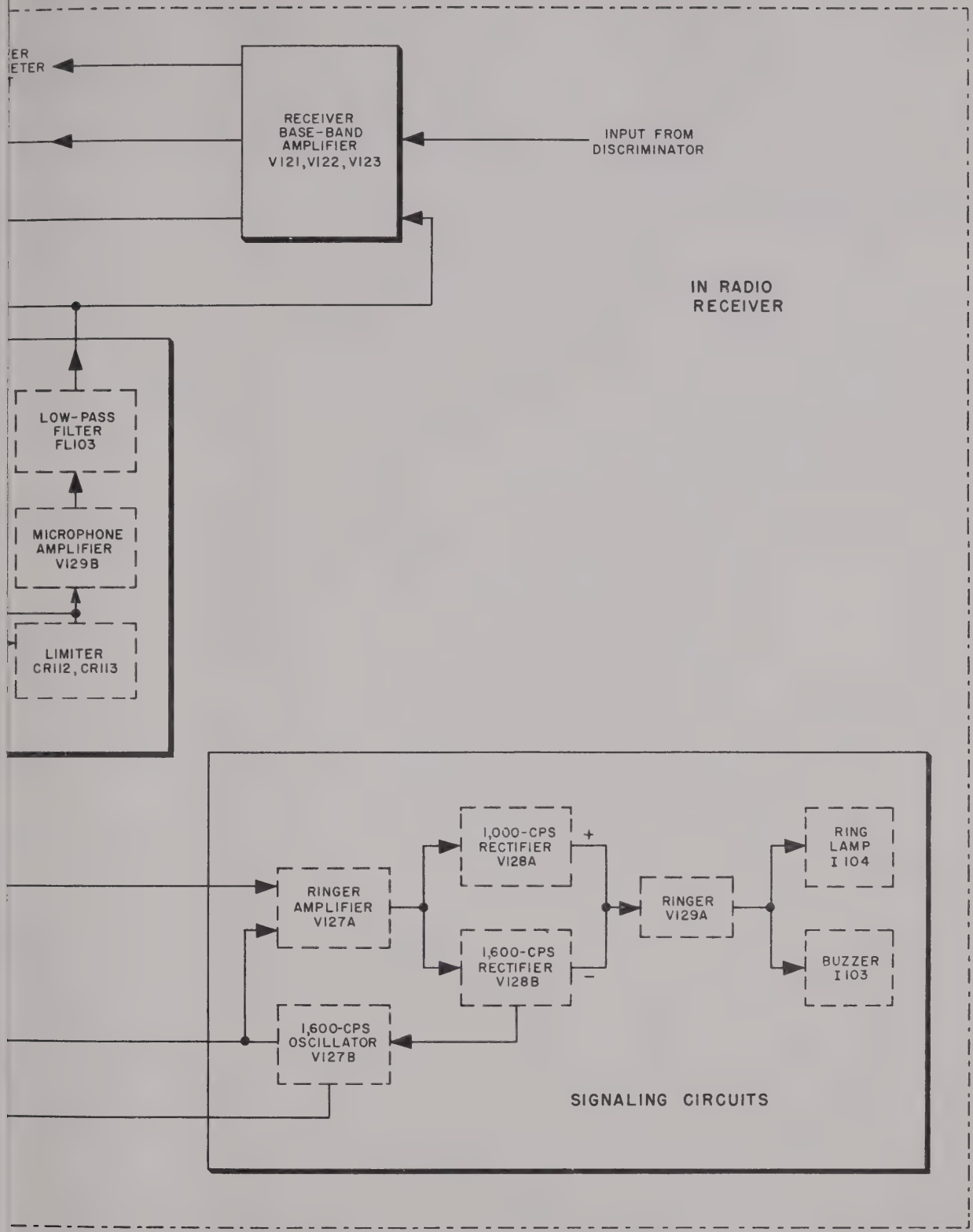

signaling circuits, block diagram.

TM687-368

381345 O - 56 (In pocket)

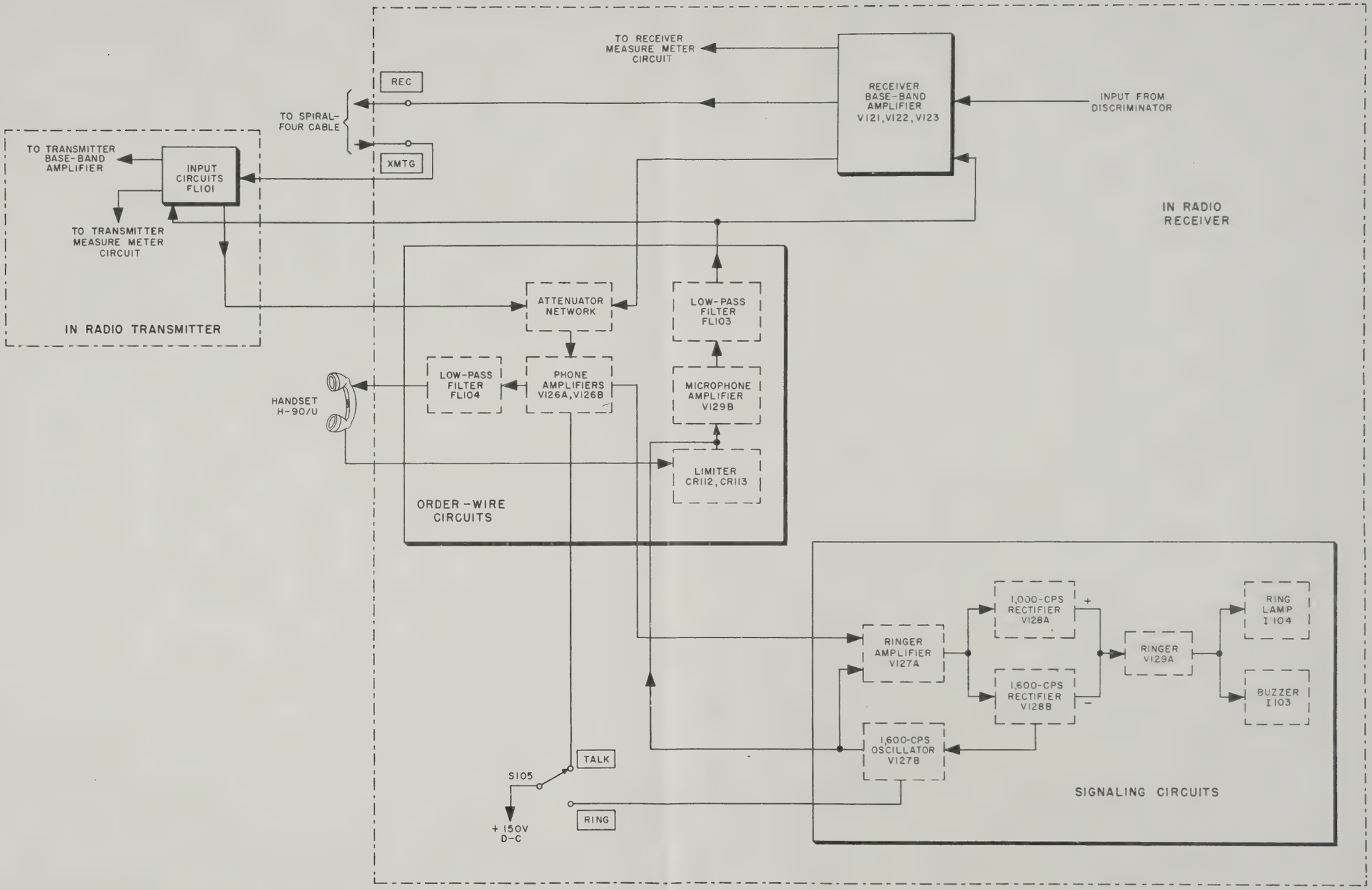

Figure 186. Order-wire and signaling circuits, block diagram.

TM687-368

381345 O - 56 (In pocket)

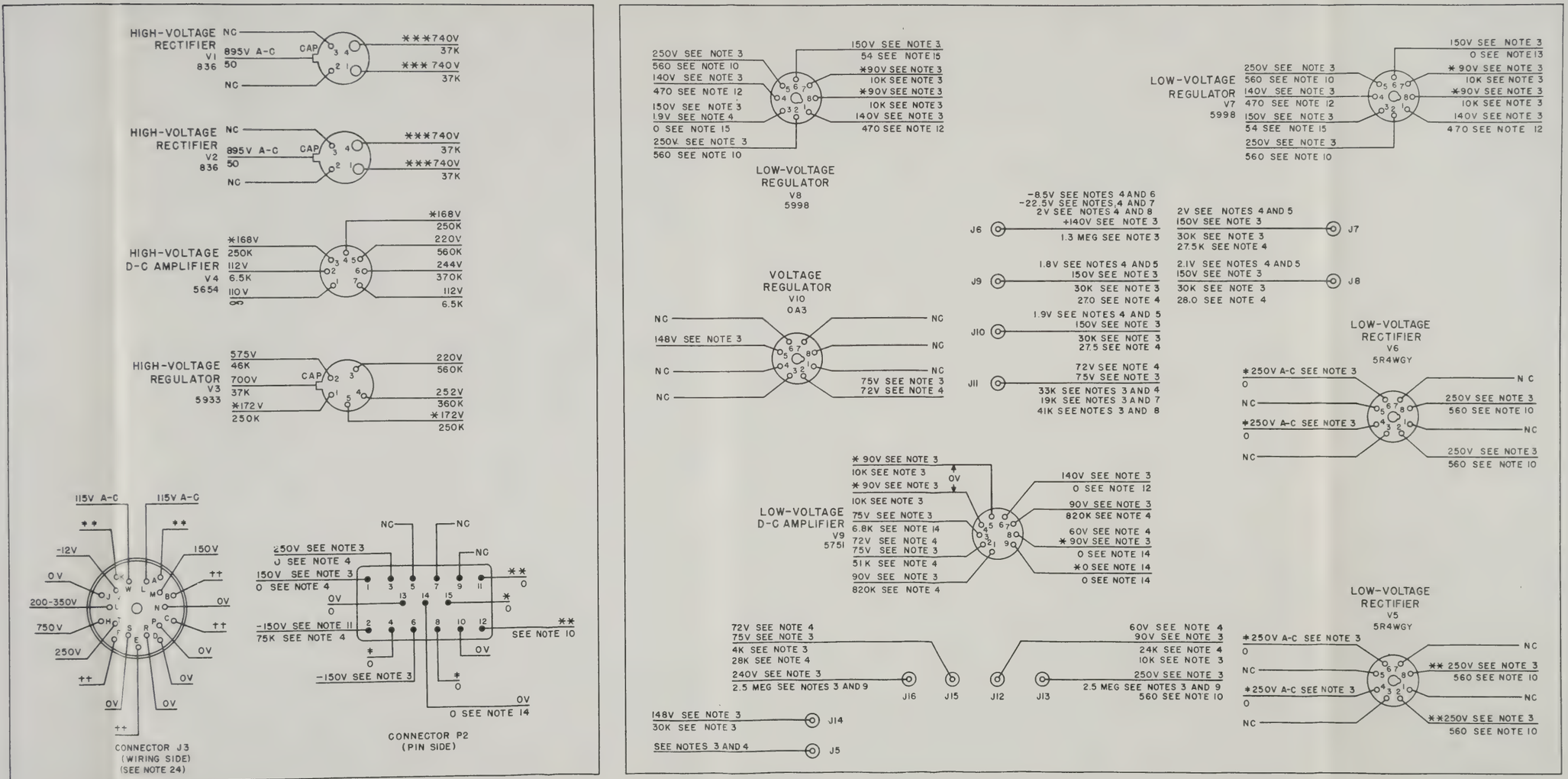

Figure 199. Power Supply PP-685/TRC, voltage and resistance diagram.

NOTES:

1. APPLY 115V A-C INPUT WHEN MEASURING VOLTAGES; DISCONNECT 115V A-C MEASURING RESISTANCES.
2. NC INDICATES NO CONNECTION.
3. ALWAYS CONNECT NEGATIVE TERMINAL OF VOLTMETER TO TEST JACK J5 WHEN MEASURING VOLTAGE.
4. ON SOME PLUG-IN ASSEMBLIES ON ORDER NO. 16881I-PHILA-51 TEST JACK J5 IS NOT CONNECTED TO CHASSIS. RESISTANCE MEASUREMENTS DEPEND ON THE ABOVE AND WILL ALSO VARY WITH LEAKAGE RESISTANCE.
5. VOLTAGES MEASURED FROM JACKS J7, J8, J9 AND J10 TO JACK J14 VARY WITH THE D-C LOAD BUT SHOULD BE APPROXIMATELY EQUAL TO EACH OTHER.
6. ADJUST 150V ADJ CONTROL TO NORMAL POSITION.
7. ADJUST 150V ADJ CONTROL TO EXTREME COUNTER-CLOCKWISE POSITION.
8. ADJUST 150V ADJ COUNTROL TO EXTREME CLOCKWISE POSITION.
9. ALLOW 10 MINUTES FOR OHMMETER TO CHARGE CAPACITORS BEFORE READING.
10. MEASURE TO JACK J16.
11. VOLTAGE VARIES WITH 150V ADJ CONTROL.
12. MEASURE TO JACK J6.
13. MEASURE TO JACK J7.
14. MEASURE TO JACK J12.
15. MEASURE TO JACK J10.
16. * INDICATES 64V A-C BETWEEN PINS.
17. ** INDICATES 5.1V A-C BETWEEN PINS.
18. *** INDICATES 2.7V A-C BETWEEN PINS.
19. + INDICATES 5.1V D-C BETWEEN PINS.
20. ++ INDICATES 6.3V A-C BETWEEN PINS.
21. * INDICATES 500V A-C BETWEEN PINS.
22. ** INDICATES 2.5V A-C BETWEEN PINS.
23. ALL VOLTAGES ARE POSITIVE UNLESS OTHERWISE SPECIFIED.
24. STRAP PINS N AND S TOGETHER FOR VOLTAGE MEASUREMENTS. UNLESS OTHERWISE SPECIFIED, MEASURE TO PIN S. REMOVE STRAP UPON COMPLETION.

TM687-376

381345 O - 56 (In pocket)

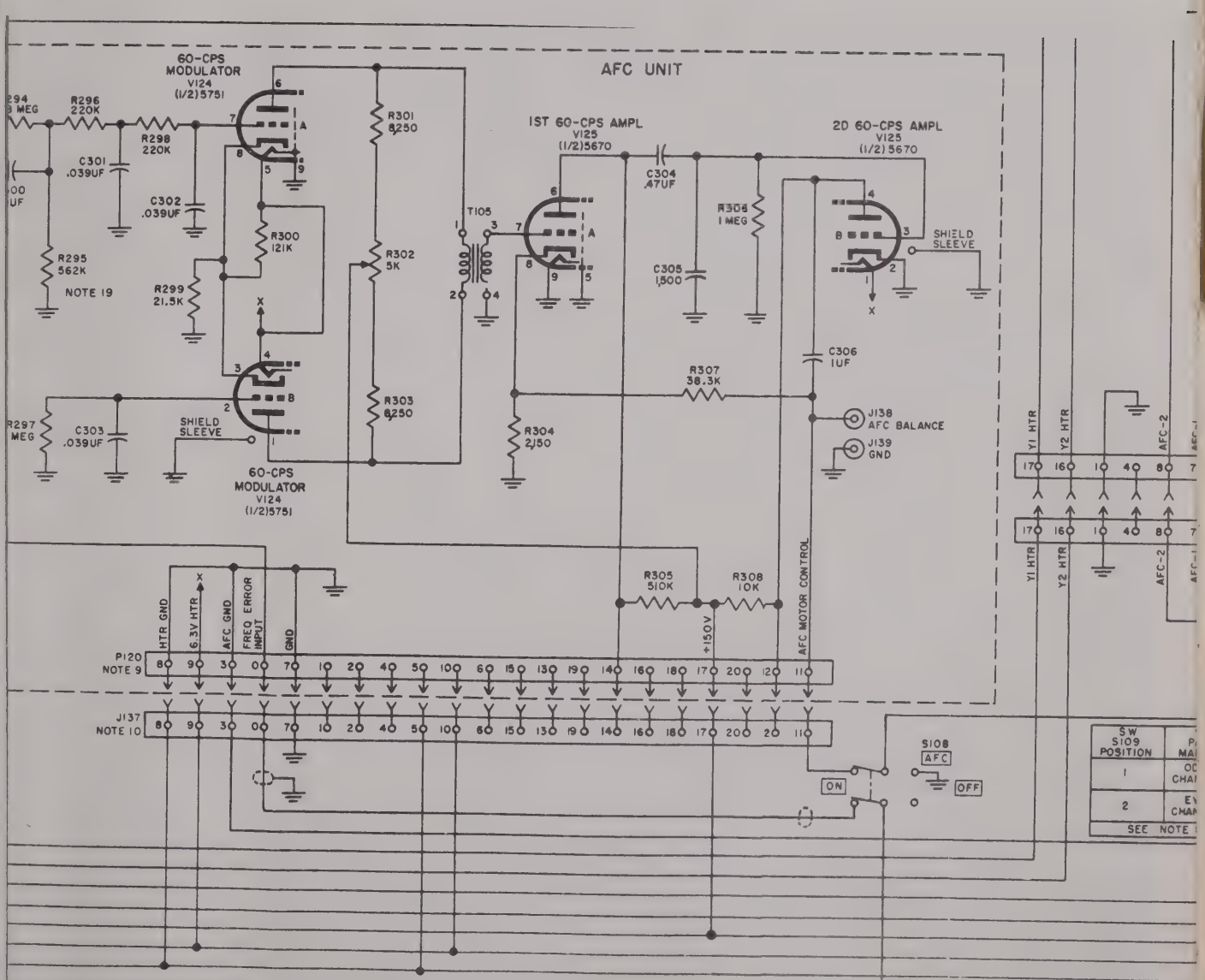
AFC UNIT
60-CPS MODULATOR V124 (1/2)5751
1ST 60-CPS AMPL V125 (1/2)5670
2D 60-CPS AMPL V125 (1/2)5670
R296 220K
R298 220K
C301 .039UF
C302 .039UF
R300 121K
R295 562K
NOTE 19
R299 21.5K
R301 8,250
R302 5K
R303 8,250
T105
C304 .47UF
R306 1 MEG
C305 1,500
SHIELD SLEEVE
C306 1UF
R307 38.3K
R304 2,50
J138 AFC BALANCE
J139 GND
R297 MEG
C303 .039UF
SHIELD SLEEVE
60-CPS MODULATOR V124 (1/2)5751
R305 510K
R308 10K
+150V
AFC MOTOR CONTROL
HTR GND
6.3V HTR
AFC GND
FREQ ERROR INPUT
GND
P120 NOTE 9
J137 NOTE 10
S108 AFC
ON
OFF
Y1 HTR
Y2 HTR
AFC-2
SW S109 POSITION
SEE NOTE

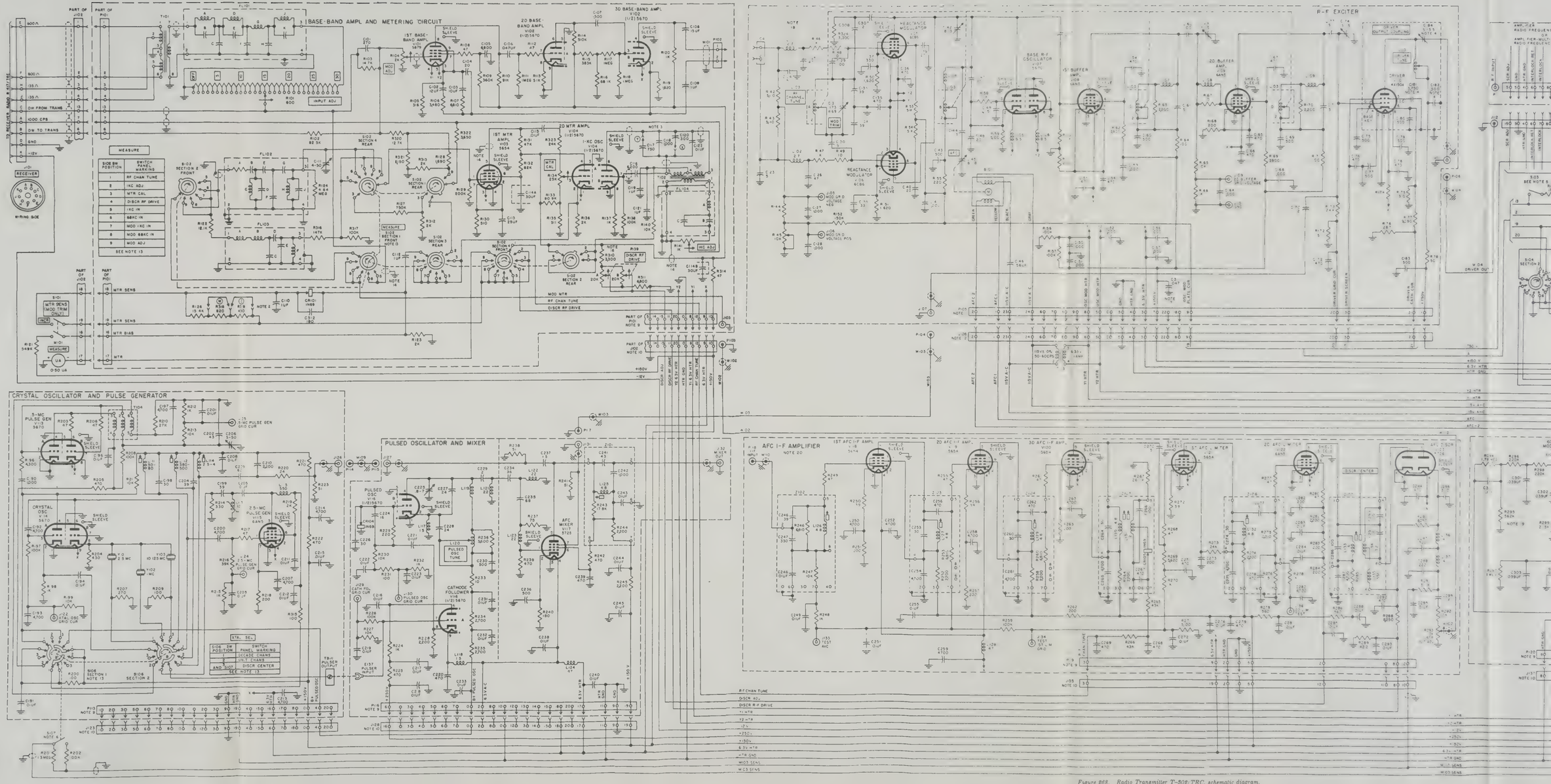

Figure 868. Radio Transmitter T-502/TRC, schematic diagram.

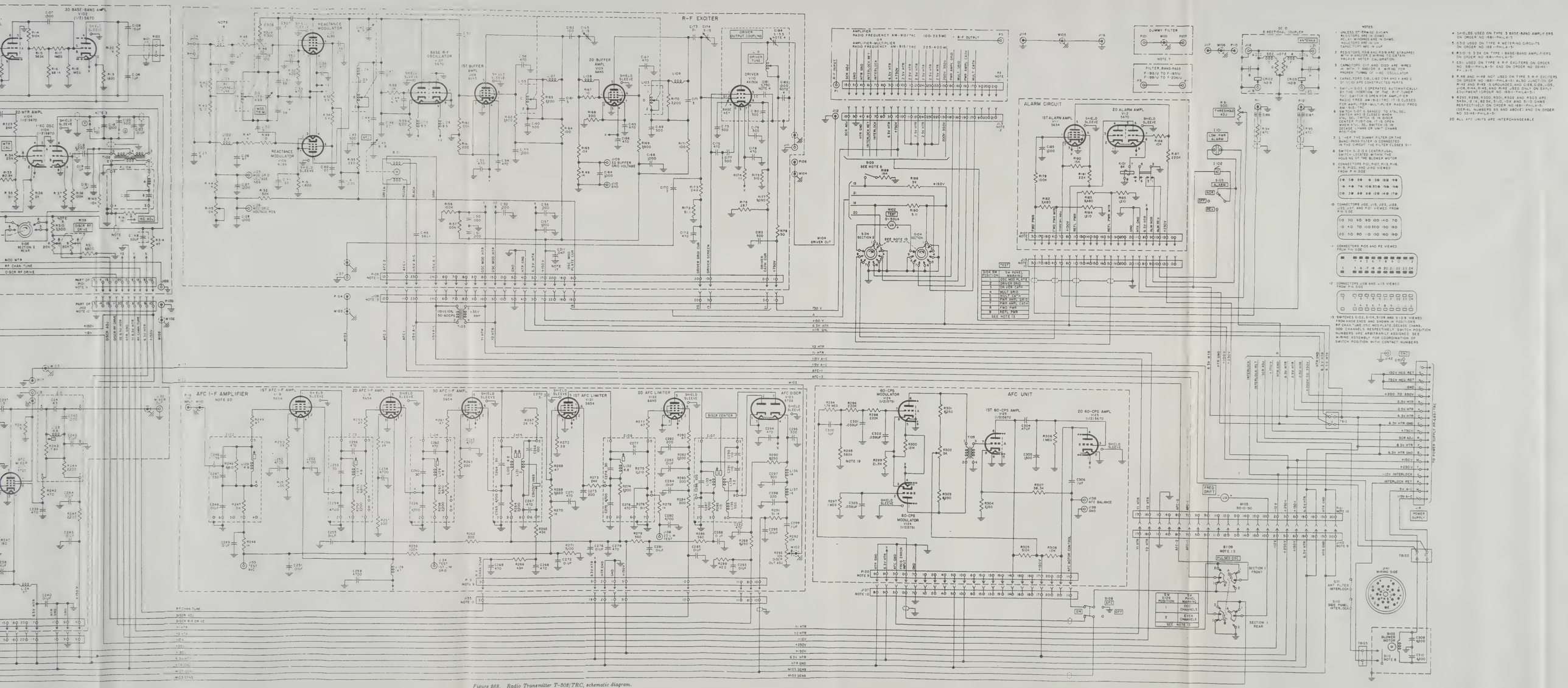

Figure 868. Radio Transmitter T-908/TRC, schematic diagram.

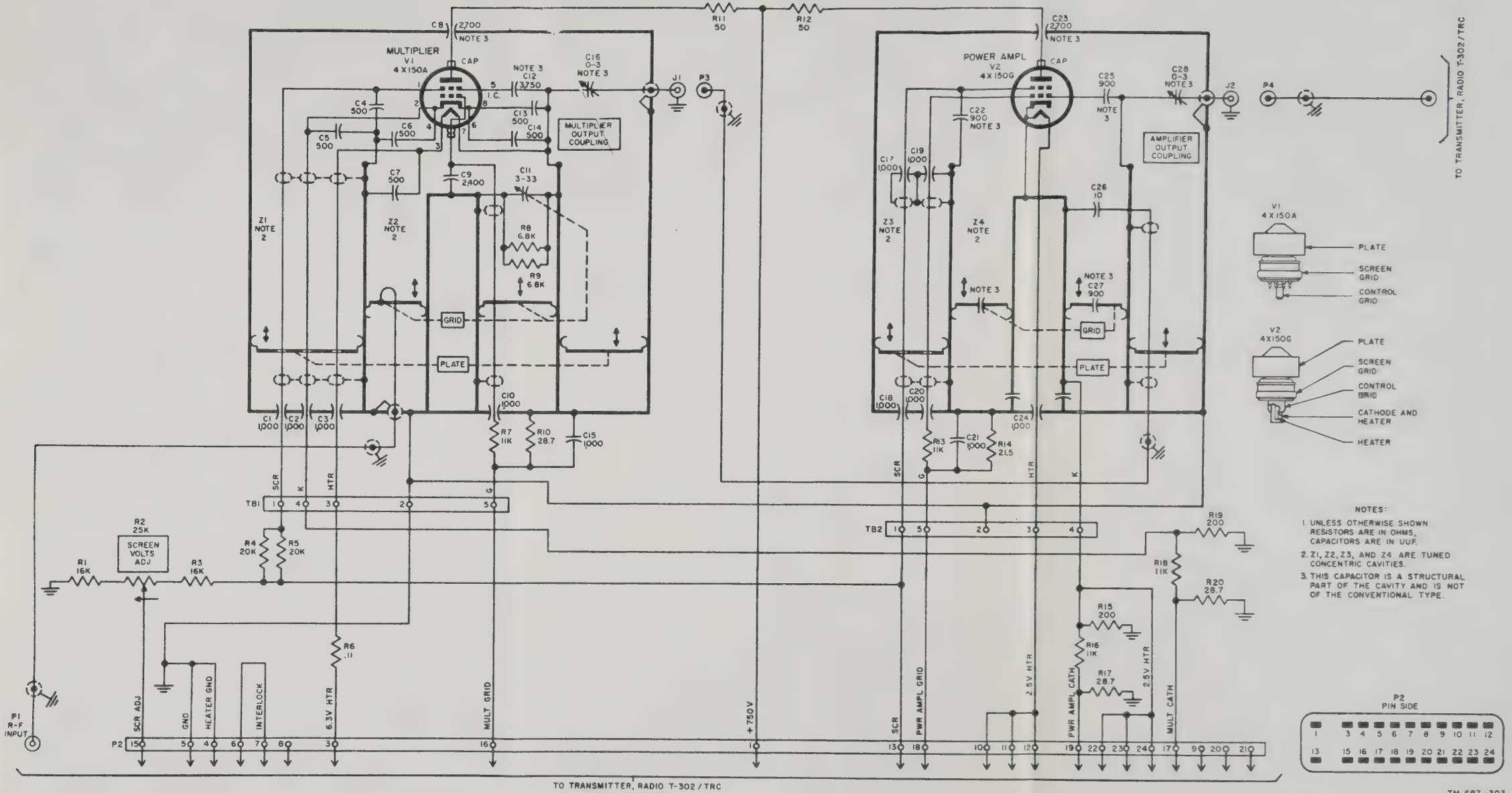

Figure 270. Radio Frequency Amplifier-Multiplier AM-915/TRC (transmitter C-band rf tuner), schematic diagram.

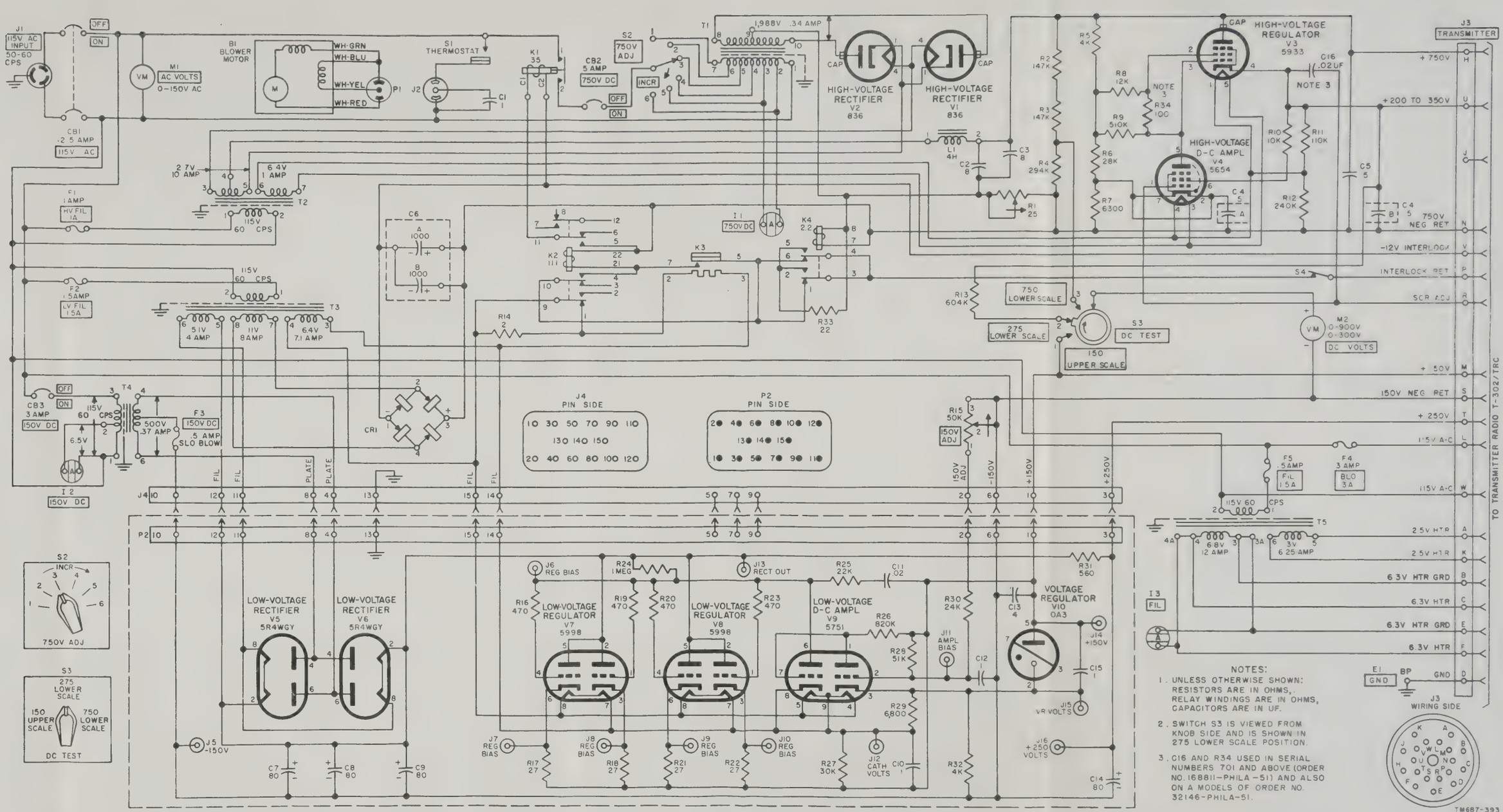

Figure 275. Power Supply PP-685/TRC, schematic diagram.

321345 O - 56 (In pocket)

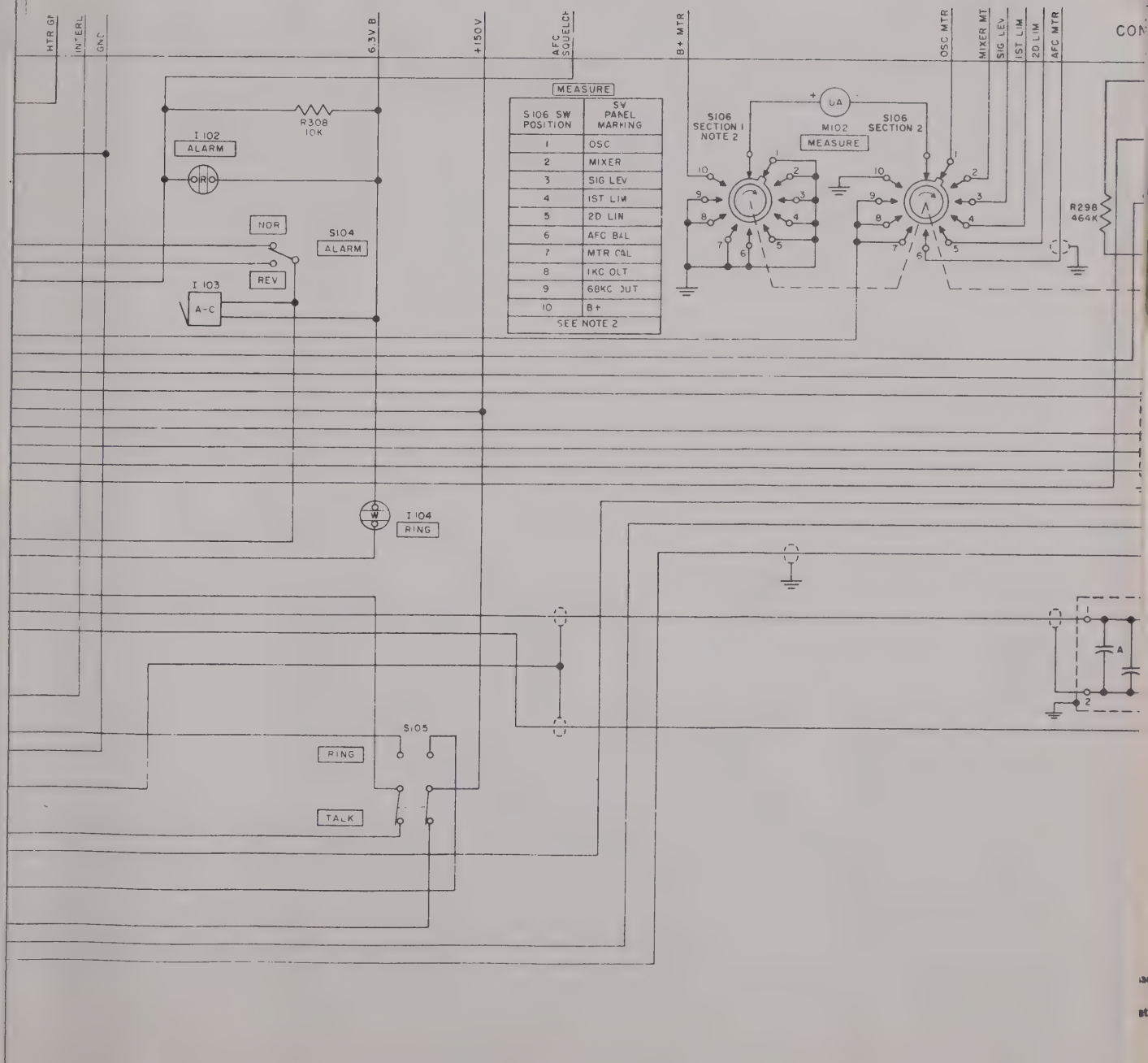
HTR GP
INTERL
GND
6.3V B
+150V
AFC SQUELCH
B+ MTR
OSC MTR
MIXER MT
SIG LEV
IST LIM
2D LIM
AFC MTR
R308 10K
I 102 ALARM
OR
NOR
REV
S104 ALARM
I 103 A-C
MEASURE
S106 SW POSITION
SW PANEL MARKING
1 OSC
2 MIXER
3 SIG LEV
4 IST LIM
5 2D LIN
6 AFC BAL
7 MTR CAL
8 IKC OUT
9 60KC OUT
10 B+
SEE NOTE 2
S106 SECTION 1 NOTE 2
S106 SECTION 2
UA
M102
MEASURE
R298 464K
I 104 RING
S105
RING
TALK
A
2

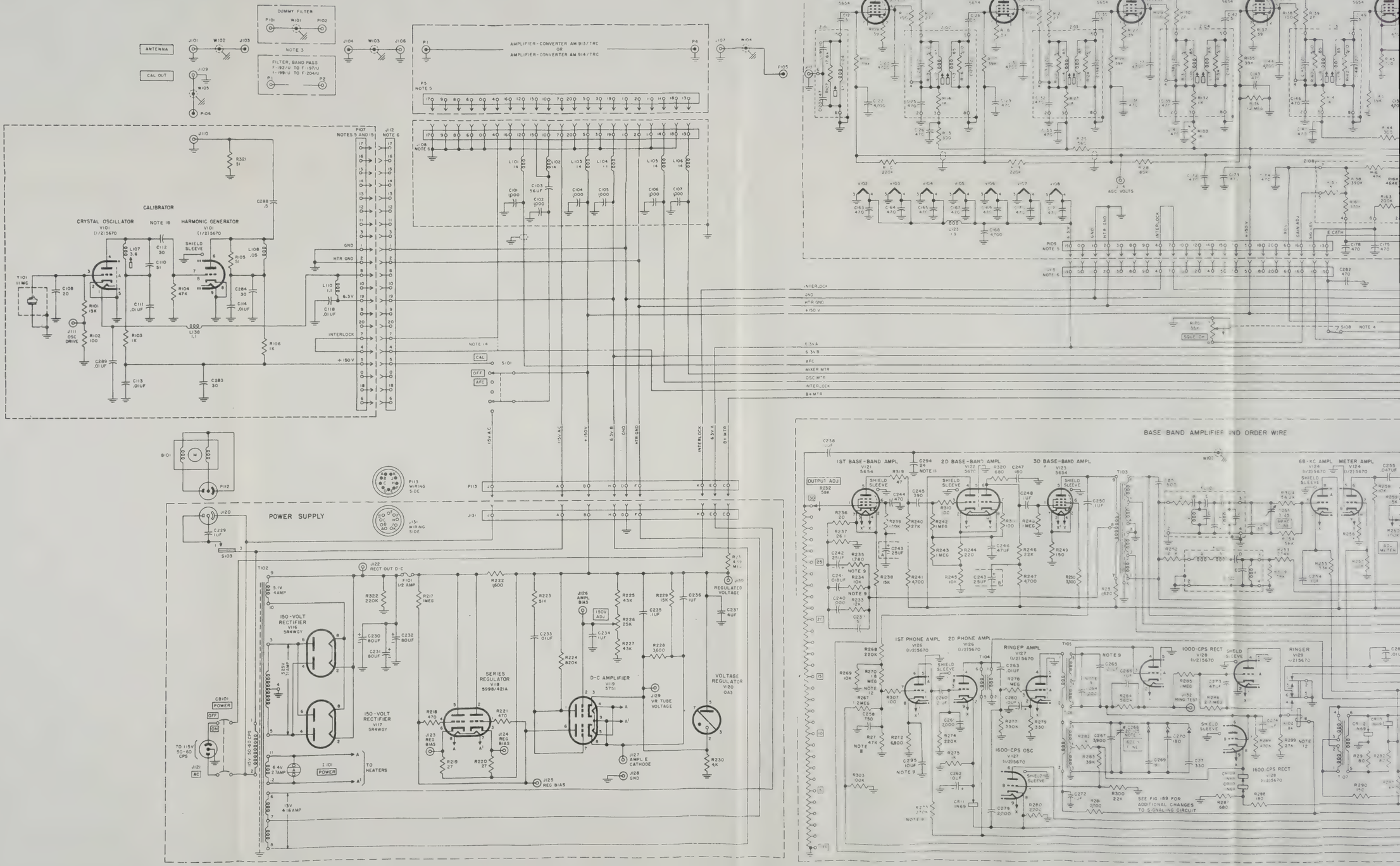

Figure 276. Radio Receiver R-417/TRC, schem

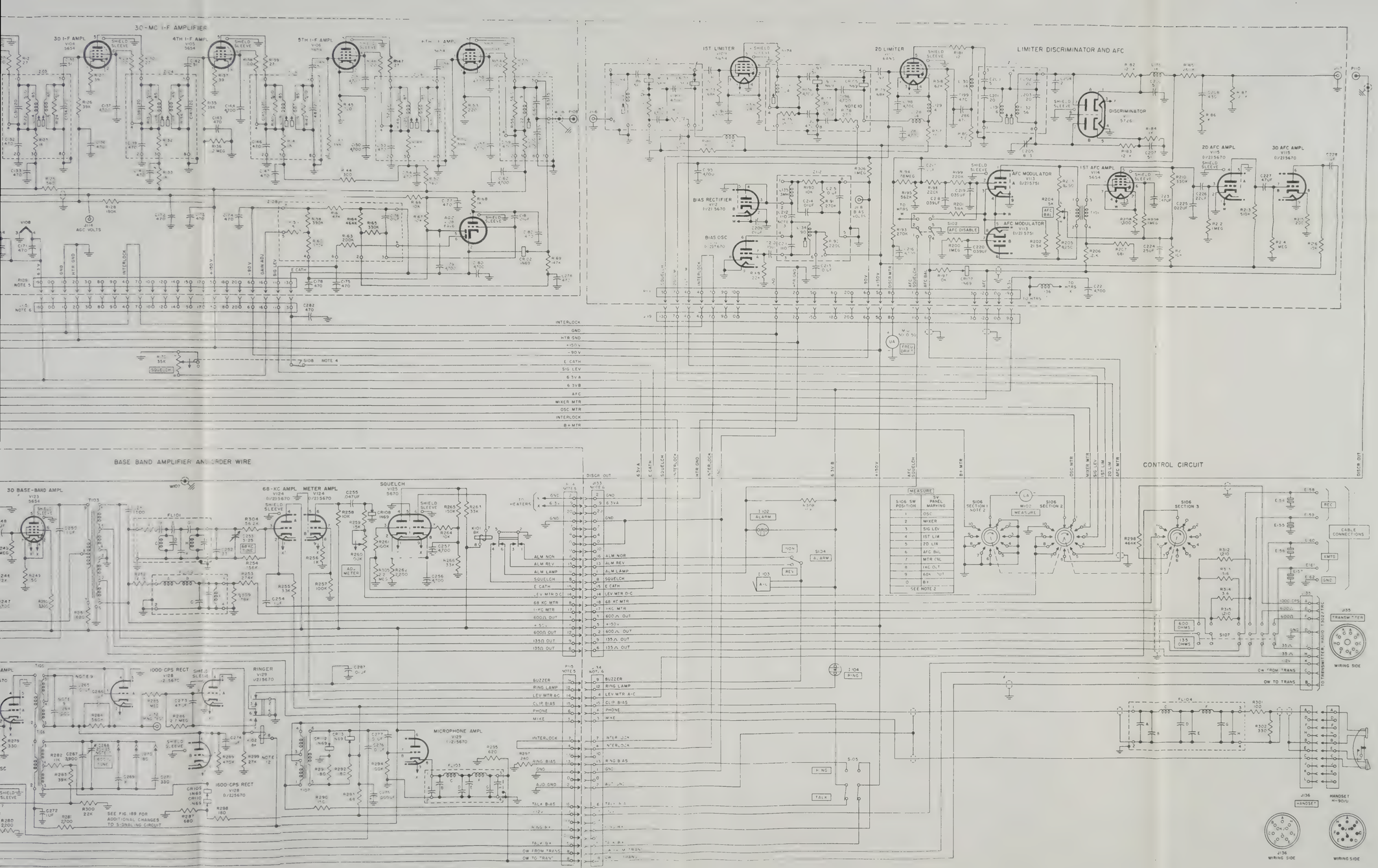

Figure 278. Radio Receiver R-417/TRC, schematic diagram.

NOTES:

1. UNLESS OTHERWISE SHOWN: RESISTORS ARE IN OHMS, RELAY WINDINGS ARE IN OHMS, INDUCTORS ARE IN UH, CAPACITORS ARE IN UUF.
2. SWITCH SI06 VIEWED FROM KNOB END AND SHOWN IN OSC POSITION. SWITCH POSITION NUMBERS ARE ARBITRARILY ASSIGNED. SEE WIRING ASSEMBLY FOR COORDINATION OF SWITCH POSITION WITH CONTACT NUMBER.
3. EITHER THE DUMMY FILTER OR THE BAND PASS FILTER IS CONNECTED IN THE CIRCUIT.
4. SWITCH SI08 IS GANGED TO SQUELCH CONTROL AND IS OPEN ONLY WHEN SQUELCH CONTROL IS OPERATED TO EXTREME CLOCKWISE POSITION.
5. CONNECTORS P5, P107, P109, P111, P114, AND P115 VIEWED FROM PIN SIDE.

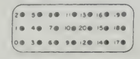

6. CONNECTORS J108, J112, J115, J119, J133 AND J134 VIEWED FROM PIN SIDE.

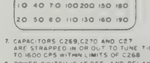

7. CAPACITORS C269, C270 AND C271 ARE STRAPPED IN OR OUT TO TUNE T106 TO 1600 CPS WITHIN LIMITS OF C268.
8. POWER SWITCH IS AT OFF, AND RELAYS ARE IN RELEASED POSITION IN THIS DIAGRAM.
9. ON ORDER NO 16811-PHILA-51 (TYPES 6 AND 7), AND ORDER NO. 32146-PHILA-51 (SERIAL NUMBERS 1 AND ABOVE) RESISTORS R233, R234, R271, AND R273 ARE 22K, 6800, 150K AND 3600 OHMS RESPECTIVELY. C264 AND C265 (TYPES 7 AND 8 ON ORDER NO. 16811-PHILA-51) ARE 6800 UUF AND .018 UF RESPECTIVELY AND C295 IS ADDED.
10. ON ORDER NO 16811-PHILA-51 (TYPE 3) AND ON ORDER NO 32146-PHILA-51 (SERIAL NUMBERS 83 AND ABOVE) R178 IS 1500 OHMS.

    C294 USED ON ORDER NO 16811-PHILA-51 BASE-BAND AMPLIFIER AND ORDER WIRE ASSEMBLIES (TYPE 4) AND ON ORDER NO. 32146-PHILA-51 (SERIAL NUMBERS 2 AND ABOVE).
11. ON ORDER NO 16811-PHILA-51 (SERIAL NUMBERS 1 THROUGH 4) R299 IS 47K AND R267 IS 1 MEG.
12. ON ORDER NO 16811-PHILA-51 (SERIAL NUMBERS 1 THROUGH 399) C211 AND C212 ARE 100 UUF.
13. TERMINAL 4 OF CONNECTOR J108 CONNECTED DIRECTLY TO TERMINAL 7 OF CONNECTOR J134 ON ORDER NO 16811-PHILA-51 (SERIAL NUMBERS 19 AND ABOVE), AND ORDER NO. 32146-PHILA-51.
14. ON ORDER NO 16811-PHILA-51 (SERIAL NUMBERS 19 AND ABOVE) AND ORDER NO 32146-PHILA-51 TERMINALS 0, 3, 6, 9, 11, 12, 14, 15, 16, 17, 18, AND 20 OF CONNECTOR P107 ARE CONNECTED TO GROUND.
15. CALIBRATOR SHOWN IS ONLY FOR SERIAL NUMBERS 1 THROUGH 47 ON ORDER NO 16811-PHILA-51. FOR OTHERS, SEE FIGURE 277.
16. [ ] INDICATES EQUIPMENT MARKING.

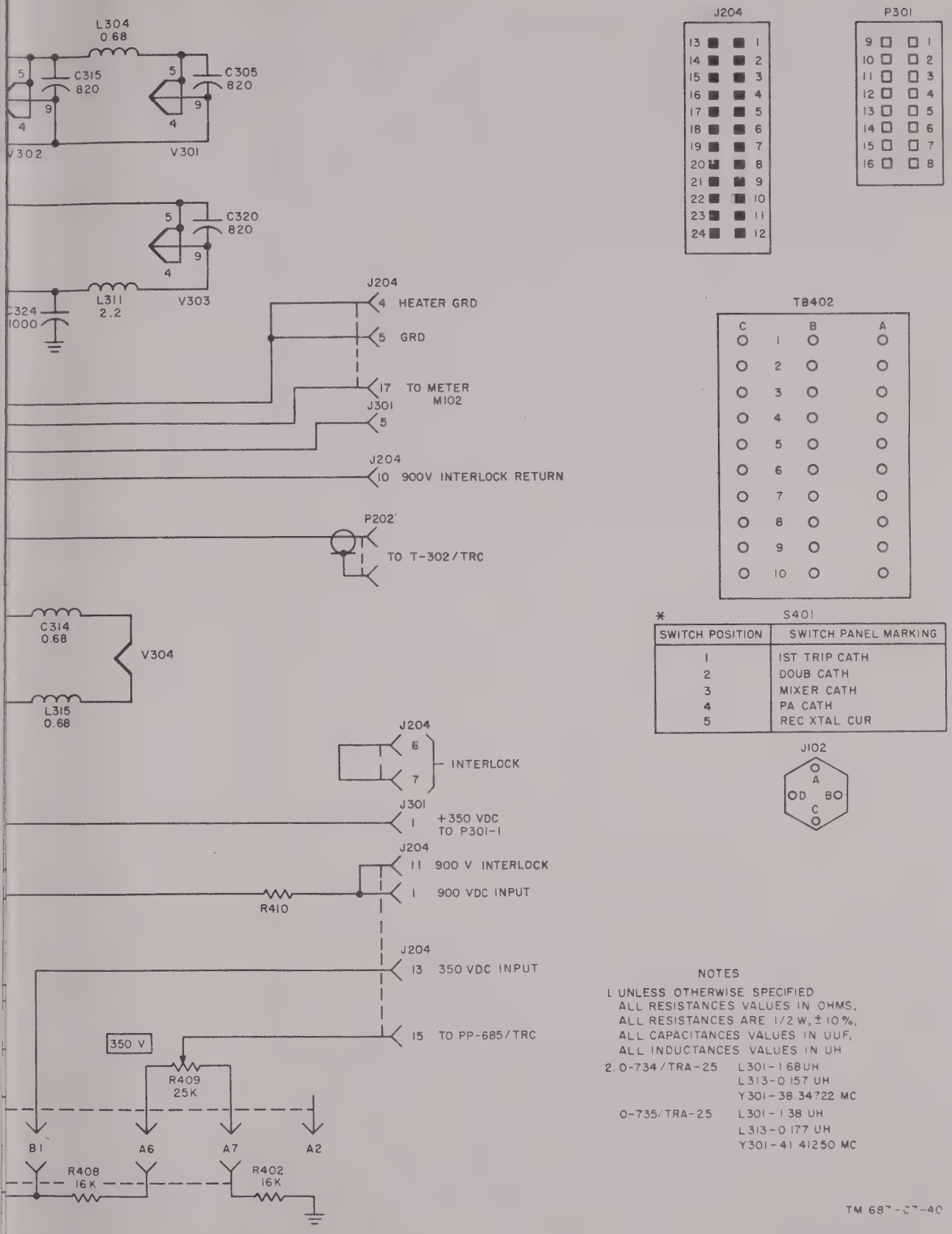

NOTES

1. UNLESS OTHERWISE SPECIFIED
   ALL RESISTANCES VALUES IN OHMS,
   ALL RESISTANCES ARE 1/2 W, ± 10 %,
   ALL CAPACITANCES VALUES IN UUF,
   ALL INDUCTANCES VALUES IN UH
2. O-734/TRA-25 L301 - 1.68 UH
   L313 - 0.157 UH
   Y301 - 38.34722 MC
   O-735/TRA-25 L301 - 1.38 UH
   L313 - 0.177 UH
   Y301 - 41.41250 MC

TM 68[illegible]-[illegible]-40

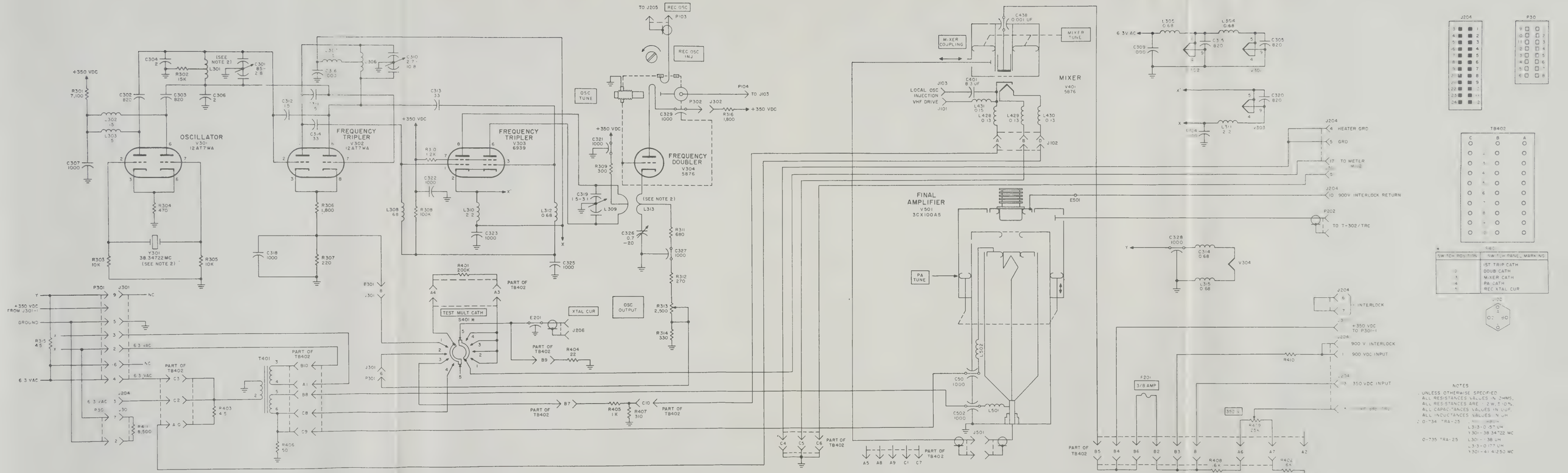

Figure 279.2. (Added) *Transmitter F-band RF tuner, schematic diagram.*

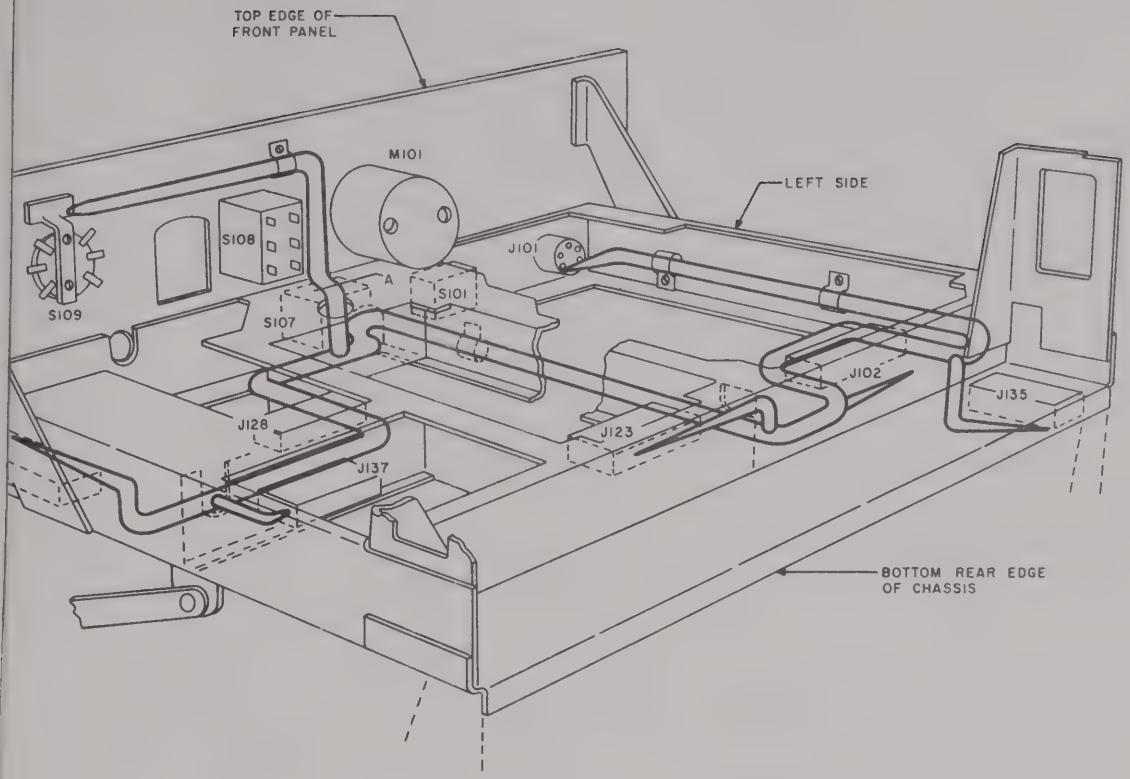

UPPER CHASSIS OF TRANSMITTER VIEWED FROM REAR

AREA NUMBERS	V I E W
1 - 4	1
5 - 13	2

NOTES:

1. WIRING NOT OTHERWISE SPECIFIED IS 22 GAUGE WIRE WITH EXTRUDED NYLON JACKET.
2. THIS WIRING IS 16 GAUGE WIRE WITH EXTRUDED NYLON JACKET.
3. THIS WIRING IS 22 GAUGE SHIELDED WIRE WITH EXTRUDED NYLON JACKET.
4. ═══ DENOTES 20 GAUGE BARE TINNED ANNEALED COPPER WIRING.
5. BARE STRAP WIRING IS RUN AS SHORT AND AS DIRECT AS POSSIBLE.
6. ▭ DENOTES IMPREGNATED FIBRE GLASS SLEEVING.
7. WIRING NOT OTHERWISE SPECIFIED IS RUN IN CABLE FORM.
8. THIS WIRING IS RUN LOOSE AND DRESSED BACK AGAINST THE CHASSIS IN THE MOST CONVENIENT MANNER.
9. P DENOTES PAIRED LEADS.

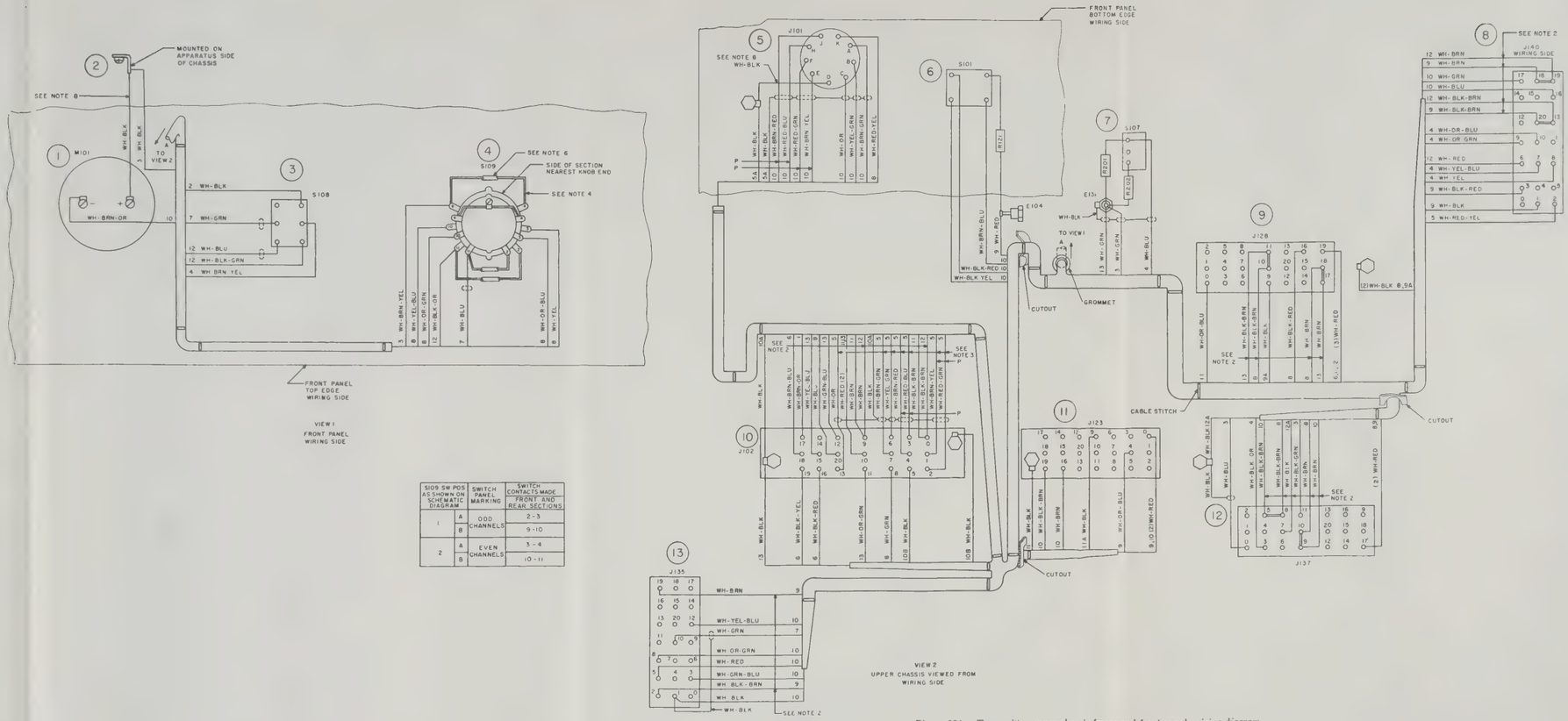

S109 SW POS AS SHOWN ON SCHEMATIC DIAGRAM	SWITCH PANEL MARKING		SWITCH CONTACTS MADE FRONT AND REAR SECTIONS
1	A	ODD CHANNELS	2-3
	B		9-10
2	A	EVEN CHANNELS	3-4
	B		10-11

Figure 281. Transmitter upper-chassis frame and front panel, wiring diagram.

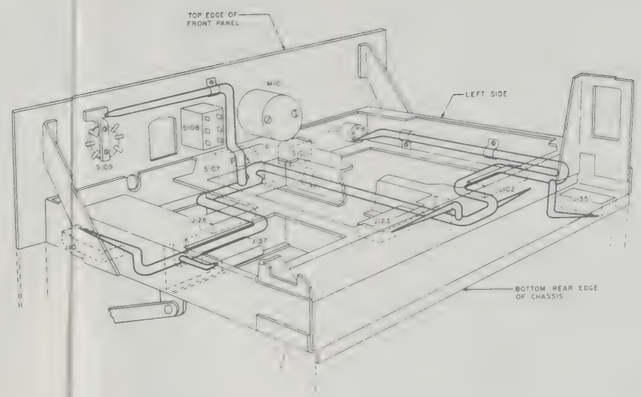

UPPER CHASSIS OF TRANSMITTER VIEWED FROM REAR

BREAK NUMBERS X EW

NOTES

1. WIRING NOT OTHERWISE SPECIFIED IS 22 GAUGE WIRE WITH EXTRUDED NYLON JACKET.
2. THIS WIRING IS 16 GAUGE WIRE WITH EXTRUDED NYLON JACKET.
3. THIS WIRING IS 22 GAUGE SHIELDED WIRE WITH EXTRUDED NYLON JACKET.
4. ═══ DENOTES 20 GAUGE BARE TINNED ANNEALED COPPER WIRING.
5. BARE STRAP WIRING IS RUN AS SHORT AND AS DIRECT AS POSSIBLE.
6. ▭ DENOTES IMPREGNATED FIBRE GLASS SLEEVING.
7. WIRING NOT OTHERWISE SPECIFIED IS RUN IN CABLE FORM.
8. THIS WIRING IS RUN LOOSE AND DRESSED BACK AGAINST THE CHASSIS IN THE MOST CONVENIENT MANNER.
9. P DENOTES PAIRED LEADS.

TM 687-312

181345 O - 56 (In pocket)

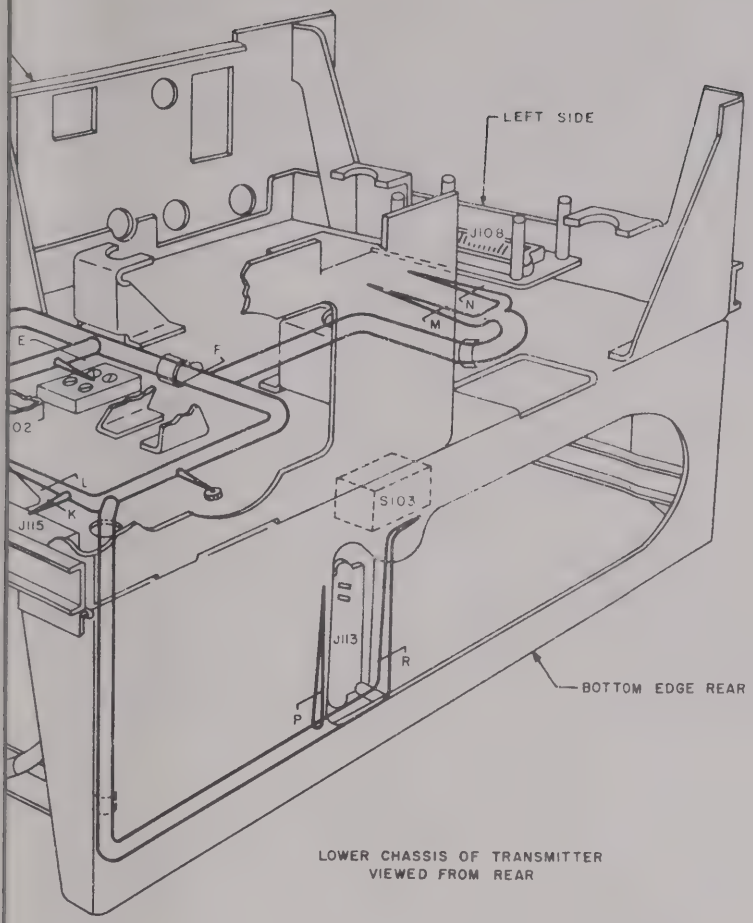

LOWER CHASSIS OF TRANSMITTER
VIEWED FROM REAR

NOTES:

1. WIRING NOT OTHERWISE SPECIFIED IS 22 GAUGE WIRE WITH EXTRUDED NYLON JACKET.
2. THIS WIRING IS 16 GAUGE WIRE WITH EXTRUDED NYLON JACKET.
3. THIS WIRING IS 22 GAUGE SHIELDED WIRE WITH EXTRUDED NYLON JACKET.
4. THIS WIRING IS 22 GAUGE WIRE WITH EXTRUDED NYLON JACKET AND 2,500 VOLT BREAKDOWN VOLTAGE.
5. THIS WIRING IS RG-58A/U TWIN CONDUCTOR COAXIAL CABLE.
6. ═══ DENOTES 20 GAUGE BARE TINNED ANNEALED COPPER WIRING.
7. BARE STRAP WIRING IS RUN AS SHORT AND AS DIRECT AS POSSIBLE.
8. ▭ DENOTES IMPREGNATED FIBRE GLASS SLEEVING.
9. TERMINALS TO WHICH THESE WIRES ARE CONNECTED ARE SLEEVED WITH 1/2 INCH LONG IMPREGNATED FIBRE GLASS SLEEVING.
10. TERMINALS TO WHICH THESE WIRES ARE CONNECTED ARE SLEEVED WITH 3/4 INCH LONG IMPREGNATED FIBRE GLASS SLEEVING.
11. P DENOTES PAIRED LEADS.
12. WIRING NOT OTHERWISE SPECIFIED IS IN CABLE FORM.
13. THIS WIRING IS RUN LOOSE AND DRESSED BACK AGAINST THE CHASSIS IN THE MOST CONVENIENT MANNER.

AREA NUMBERS	VIEW
1 - 11	1
12 - 27	2

S104 SW POS AS SHOWN ON SCHEMATIC DIAGRAM	SW PANEL MARKING	SW CONTACTS MADE SECTION 1 AND 2
1	OSC MOD PLATE	10 - 1
2	DRIVER GRID	10 - 2
3	DRIVER CATH	10 - 3
4	MULT GRID	10 - 4
5	MULT CATH	10 - 5
6	PWR AMPL GRID	10 - 6
7	PWR AMPL CATH	10 - 7
8	FWD PWR	10 - 8
9	REFL PWR	10 - 9

TM 687-313

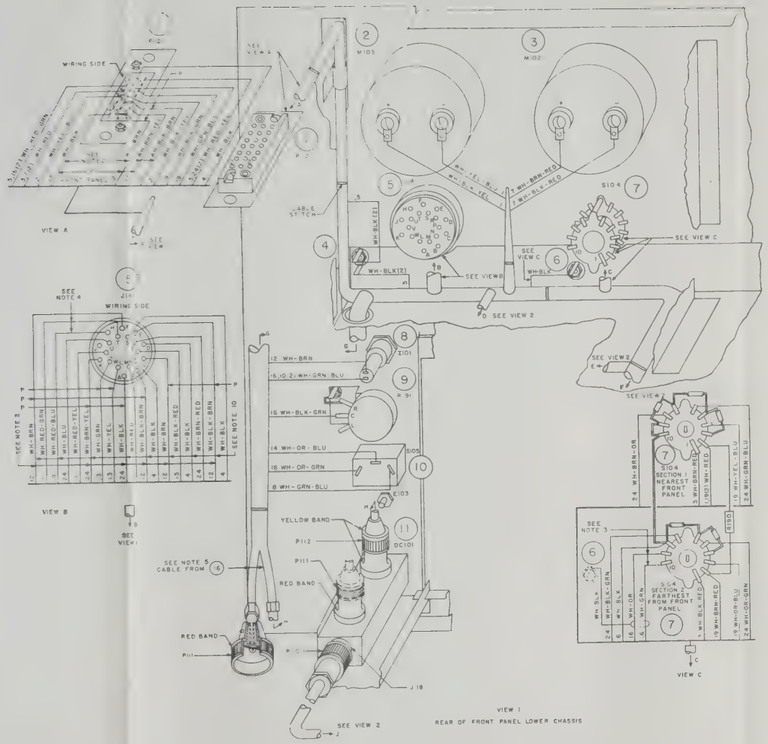

Figure 282. Transmitter lower-chassis frame and front panel, wiring diagram.

AREA NUMBERS	VIEW
-	1
2 thru 27	2

S104 SW POS AS SHOWN ON SCHEMATIC DIAGRAM	SW PANEL MARKING	SW CONTACTS MADE SECTION I AND 2
1	CSC MOD PLATE	10-1
2	DRIVER GRID	10-2
3	DRIVER CATH	10-3
4	MULT GRID	10-4
5	MULT CATH	10-5
6	PWR AMPL GRID	10-6
7	PWR AMPL CATH	10-7
8	FWD PWR	10-8
9	REFL PWR	10-9

NOTES

1. WIRING NOT OTHERWISE SPECIFIED IS 22 GAUGE WIRE WITH EXTRUDED NYLON JACKET
2. THIS WIRING IS 16 GAUGE WIRE WITH EXTRUDED NYLON JACKET
3. THIS WIRING IS 22 GAUGE SHIELDED WIRE WITH EXTRUDED NYLON JACKET
4. THIS WIRING IS 22 GAUGE WIRE WITH EXTRUDED NYLON JACKET AND 2,500 VOLT BREAKDOWN VOLTAGE.
5. THIS WIRING IS RG-58A/U TWIN CONDUCTOR COAXIAL CABLE
6. ═══ DENOTES 20 GAUGE BARE TINNED ANNEALED COPPER WIRING
7. BARE STRAP WIRING IS RUN AS SHORT AND AS DIRECT AS POSSIBLE
8. ▭▭▭ DENOTES IMPREGNATED FIBRE GLASS SLEEVING.
9. TERMINALS TO WHICH THESE WIRES ARE CONNECTED ARE SLEEVED WITH 1/2 INCH LONG IMPREGNATED FIBRE GLASS SLEEVING
10. TERMINALS TO WHICH THESE WIRES ARE CONNECTED ARE SLEEVED WITH 3/4 INCH LONG IMPREGNATED FIBRE GLASS SLEEVING
11. P DENOTES PAIRED LEADS.
12. WIRING NOT OTHERWISE SPECIFIED IS IN CABLE FORM
- * THIS WIRING IS RUN LOOSE AND DRESSED BACK AGAINST THE CHASSIS IN THE MOST CONVENIENT MANNER

TM 687-313

381345 O - 56 (In pocket)

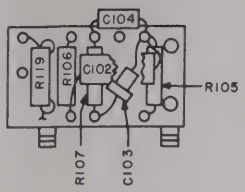

DETAIL OF TB101

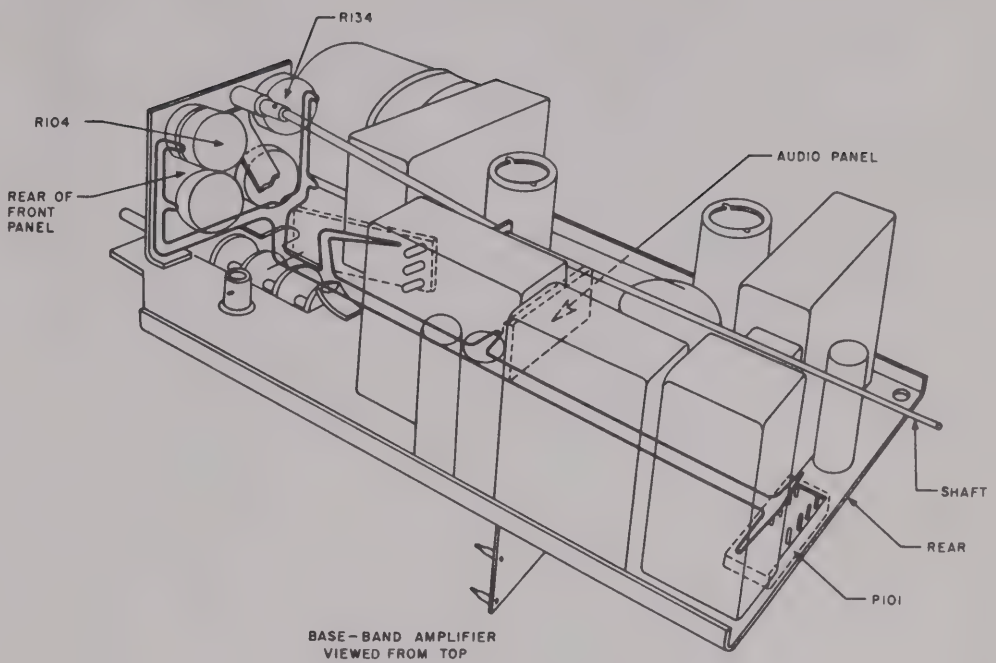

BASE-BAND AMPLIFIER VIEWED FROM TOP

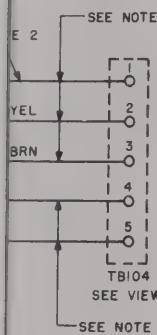

AREA NUMBERS	VIEW
1 - 4	1
8 - 25	2

NOTES:

1. WIRING NOT OTHERWISE SPECIFIED IS 22 GAUGE WIRE WITH EXTRUDED NYLON JACKET.
2. THIS WIRING IS 22 GAUGE SHIELDED WIRE.
3. ═══ DENOTES 20 GAUGE BARE TINNED ANNEALED COPPER WIRING.
4. BARE STRAP WIRING IS RUN AS SHORT AND AS DIRECT AS POSSIBLE.
5. ⊏⊐ DENOTES IMPREGNATED FIBRE GLASS SLEEVING.
6. WIRING NOT OTHERWISE SPECIFIED IS RUN IN CABLE FORM.
7. THIS WIRING IS CONNECTED DIRECTLY FROM TERMINAL TO TERMINAL IN THE SHORTEST POSSIBLE MANNER.
8. THIS WIRING IS RUN LOOSE AND DRESSED BACK AGAINST THE CHASSIS IN THE MOST CONVENIENT MANNER.
9. W AND/OR Z WIRING IS PROVIDED TO OBTAIN PROPER METER CALIBRATIONS.
10. Y AND/OR X WIRING IS PROVIDED TO OBTAIN PROPER TUNING OF 1-KC OSCILLATOR.
11. THIS WIRE IS IN RF CABLE ASSEMBLY.
12. ALL COMPONENTS, PLUS LEADS HAVE BEEN KEPT APPROXIMATELY 1/8 INCH AWAY FROM EDGE OF CABLE GROMMET HOLE.
13. SOME UNITS ARE FURNISHED WITH A WH-BLK LEAD.
14. IN SOME UNITS THIS STRIP IS DESIGNATED AS TB123.

DETAIL OF TB102

S102 SW POS AS SHOWN ON SCHEM DIAGRAM	SW PANEL MARKING	SW CONTACTS MADE							
		SECT 1		SECT 2		SECT 3		SECT 4	
		F	R	F	R	F	R	F	R
1	RF CHAN TUNE	—	—	—	—	—	—	2-3	—
2	1KC ADJ	—	8-10	—	8-10	—	8-10	2-4	—
3	MTR CAL	—	8-11	—	8-11	—	8-11	2-5	8-11
4	DISCR RF DRIVE	—	—	—	—	—	—	2-6	—
5	1KC IN	2-7	—	2-7	—	—	8-1	2-7	8-1
6	68KC IN	2-8	—	2-8	—	—	8-2	2-8	8-2
7	MOD 1KC IN	2-9	—	2-9	—	—	8-3	2-9	8-3
8	MOD 68KC IN	2-10	—	2-10	—	—	8-4	2-10	8-4
9	MOD ADJ	2-11	8-5	2-11	8-5	—	8-5	2-11	8-5

TM 687-314

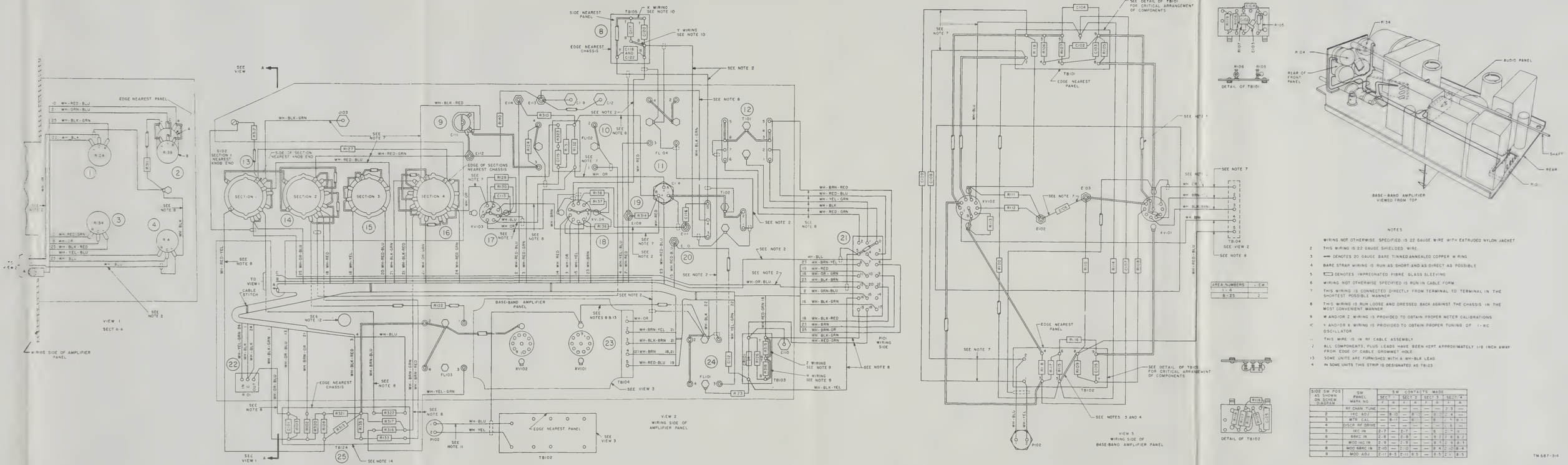

Figure 283. Transmitter base-band amplifier and metering circuit plug-in assembly, wiring diagram.

NOTES

WIRING NOT OTHERWISE SPECIFIED IS 22 GAUGE WIRE WITH EXTRUDED NYLON JACKET

2 THIS WIRING IS 22 GAUGE SHIELDED WIRE

3 ⟶ DENOTES 20 GAUGE BARE TINNED ANNEALED COPPER WIRING

4 BARE STRAP WIRING IS RUN AS SHORT AND AS DIRECT AS POSSIBLE

5 ▭ DENOTES IMPREGNATED FIBRE GLASS SLEEVING

6 WIRING NOT OTHERWISE SPECIFIED IS RUN IN CABLE FORM

7 THIS WIRING IS CONNECTED DIRECTLY FROM TERMINAL TO TERMINAL IN THE SHORTEST POSSIBLE MANNER

8 THIS WIRING IS RUN LOOSE AND DRESSED BACK AGAINST THE CHASSIS IN THE MOST CONVENIENT MANNER

9 W AND/OR Z WIRING IS PROVIDED TO OBTAIN PROPER METER CALIBRATIONS

10 Y AND/OR X WIRING IS PROVIDED TO OBTAIN PROPER TUNING OF 1-KC OSCILLATOR

11 THIS WIRE IS IN RF CABLE ASSEMBLY

12 ALL COMPONENTS, PLUS LEADS HAVE BEEN KEPT APPROXIMATELY 1/8 INCH AWAY FROM EDGE OF CABLE GROMMET HOLE

13 SOME UNITS ARE FURNISHED WITH A WH-BLK LEAD

14 IN SOME UNITS THIS STRIP IS DESIGNATED AS TB123

AREA NUMBERS	EW
1-4	1
8-25	2

S102 SW POS AS SHOWN ON SCHEM DIAGRAM	SW PANEL MARK NO	SW CONTACTS MADE							
		SECT 1		SECT 2		SECT 3		SECT 4	
		F	R	F	R	F	R	F	R
1	RF CHAN TUNE	—	—	—	—	—	—	2	3
2	1KC ADJ	—	8-10	—	8-10	—	3	4	—
3	MTR CAL	—	8-11	—	10	—	8	1	8-11
4	DISCR RF DRIVE	—	—	—	—	—	—	6	—
5	1KC IN	2-7	—	2-7	—	8	2	7	8
6	6BKC IN	2-8	—	2-8	—	8	2	7	8
7	MOD 1KC IN	2-9	—	2-9	—	8	1	2	9
8	MOD 6BKC IN	2-10	—	2-10	—	8	4	2	10
9	MOD ADJ	2-11	8-5	2-11	8-5	—	8-5	1	8-5

TM 687-314

381345 O - 56 (In pocket)

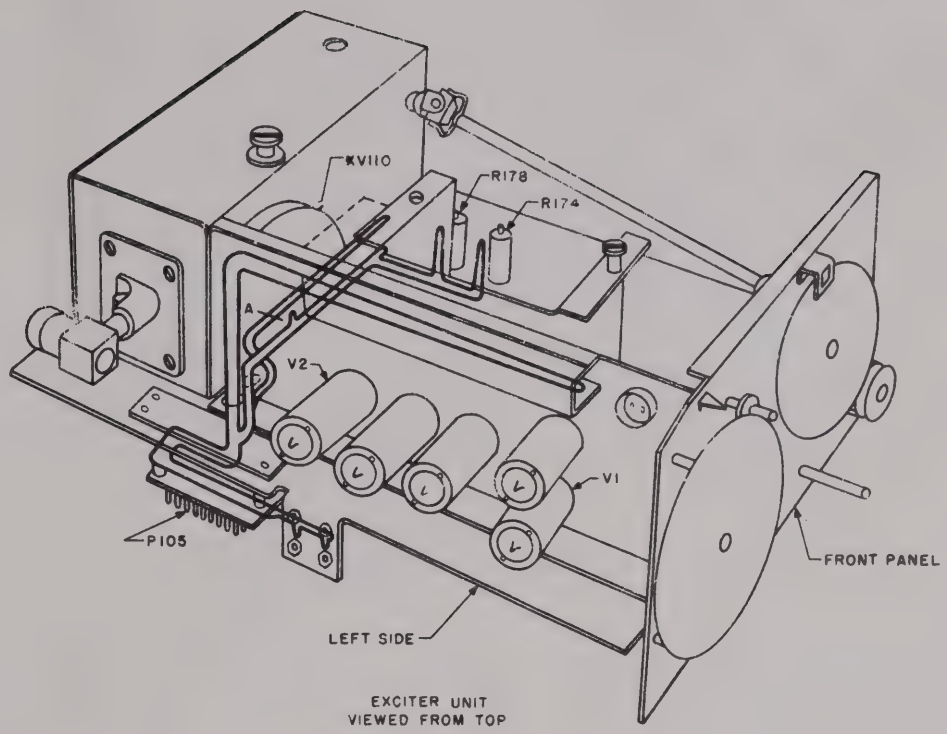

EXCITER UNIT
VIEWED FROM TOP

SEE NOTE 10

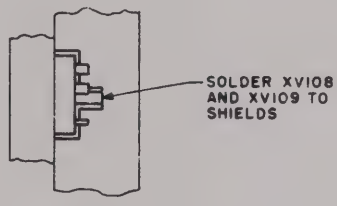

DETAIL OF
XV108 AND XV109

SEE NOTE 6

SEE NOTE 1

AREA NUMBERS	VIEW
1 - 2	1
3 - 8	2

NOTES:

1. WIRING NOT OTHERWISE SPECIFIED IS 22 GAUGE WIRE WITH EXTRUDED NYLON JACKET.
2. ═══ DENOTES 20 GAUGE BARE TINNED ANNEALED COPPER WIRING.
3. A ═══ DENOTES 18 GAUGE BARE TINNED ANNEALED COPPER WIRING.
4. BARE STRAP WIRING IS RUN AS SHORT AND DIRECT AS POSSIBLE.
5. WIRING NOT OTHERWISE SPECIFIED IS CONNECTED DIRECTLY FROM TERMINAL TO TERMINAL IN THE SHORTEST POSSIBLE MANNER.
6. THIS WIRING IS RUN LOOSE AND DRESSED BACK AGAINST THE CHASSIS IN THE MOST CONVENIENT MANNER.
7. ▭ DENOTES IMPREGNATED FIBRE GLASS SLEEVING.
8. Y DENOTES LEADS OF COMPONENTS WHICH ARE WIRED SO AS TO PROVIDE NOT MORE THAN $\frac{1}{4}$ INCH OR LESS THAN $\frac{1}{8}$ INCH OF WIRE BETWEEN COMPONENT AND TERMINAL WIRED THERETO.
9. T DENOTES TOP TERMINAL, B DENOTES BOTTOM (NEAREST MOUNTING SURFACE) TERMINAL.
10. THIS IS A TINNED COPPER STRAP CONNECTOR .010 INCH THICK BY 3/8 INCH WIDE BY 1 3/8 INCH LONG.
11. THIS WIRING IS 22 GAUGE WIRE WITH AN EXTRUDED NYLON JACKET AND INSULATION WHICH HAS A MAXIMUM RATED WORKING VOLTAGE OF 600 VOLTS AC RMS AND 1000 VOLTS DC.

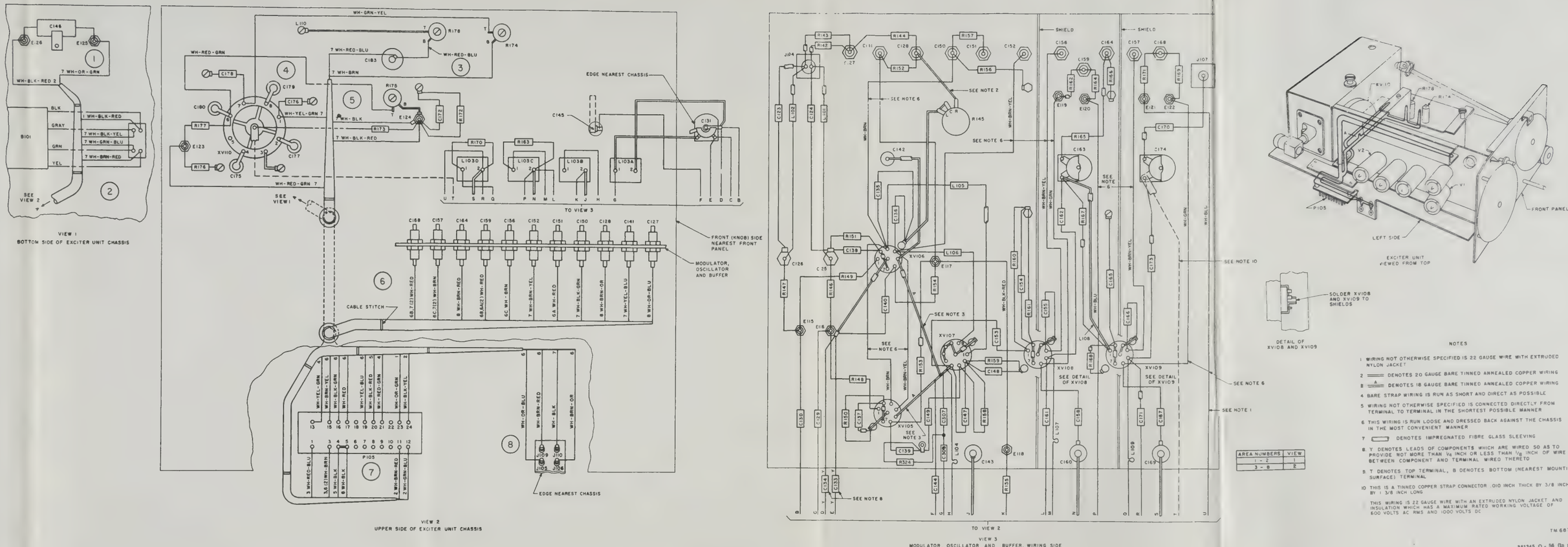

Figure 284. Rf exciter plug-in assembly, wiring diagram for type 1 procured on Order No. 16811–Phila–51.

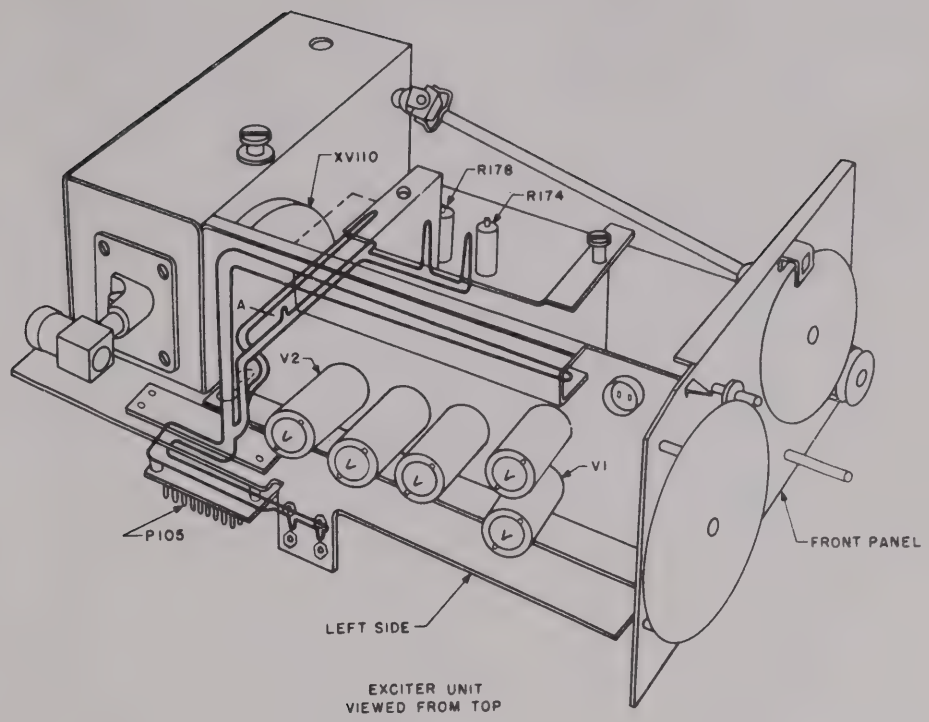

EXCITER UNIT
VIEWED FROM TOP

SEE NOTE 10

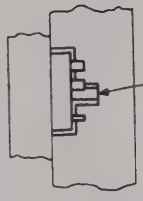

DETAIL OF
XV108 AND XV109

SEE NOTE 6

SEE NOTE 1

AREA NUMBERS	VIEW
1 - 2	1
3 - 8	2

NOTES:

1. WIRING NOT OTHERWISE SPECIFIED IS 22 GAUGE WIRE WITH EXTRUDED NYLON JACKET.
2. ═══ DENOTES 20 GAUGE BARE TINNED ANNEALED COPPER WIRING.
3. A ═══ DENOTES 18 GAUGE BARE TINNED ANNEALED COPPER WIRING.
4. BARE STRAP WIRING IS RUN AS SHORT AND DIRECT AS POSSIBLE.
5. WIRING NOT OTHERWISE SPECIFIED IS CONNECTED DIRECTLY FROM TERMINAL TO TERMINAL IN THE SHORTEST POSSIBLE MANNER.
6. THIS WIRING IS RUN LOOSE AND DRESSED BACK AGAINST THE CHASSIS IN THE MOST CONVENIENT MANNER.
7. ⊂═══⊃ DENOTES IMPREGNATED FIBRE GLASS SLEEVING.
8. Y DENOTES LEADS OF COMPONENTS WHICH ARE WIRED SO AS TO PROVIDE NOT MORE THAN 1/4 INCH OR LESS THAN 1/8 INCH OF WIRE BETWEEN COMPONENT AND TERMINAL WIRED THERETO.
9. T DENOTES TOP TERMINAL, B DENOTES BOTTOM (NEAREST MOUNTING SURFACE) TERMINAL.
10. THIS IS A TINNED COPPER STRAP CONNECTOR .010 INCH THICK BY 3/8 INCH WIDE BY 1-3/8 INCH LONG
11. THIS WIRING IS 22 GAUGE WIRE WITH AN EXTRUDED NYLON JACKET AND INSULATION WHICH HAS A MAXIMUM RATED WORKING VOLTAGE OF 600 VOLTS AC RMS AND 1000 VOLTS DC.

TM687-339

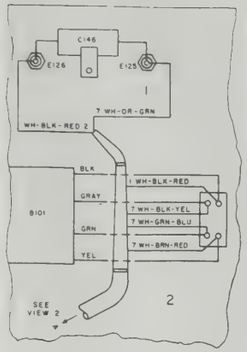

VIEW 1
BOTTOM SIDE OF EXCITER UNIT CHASSIS

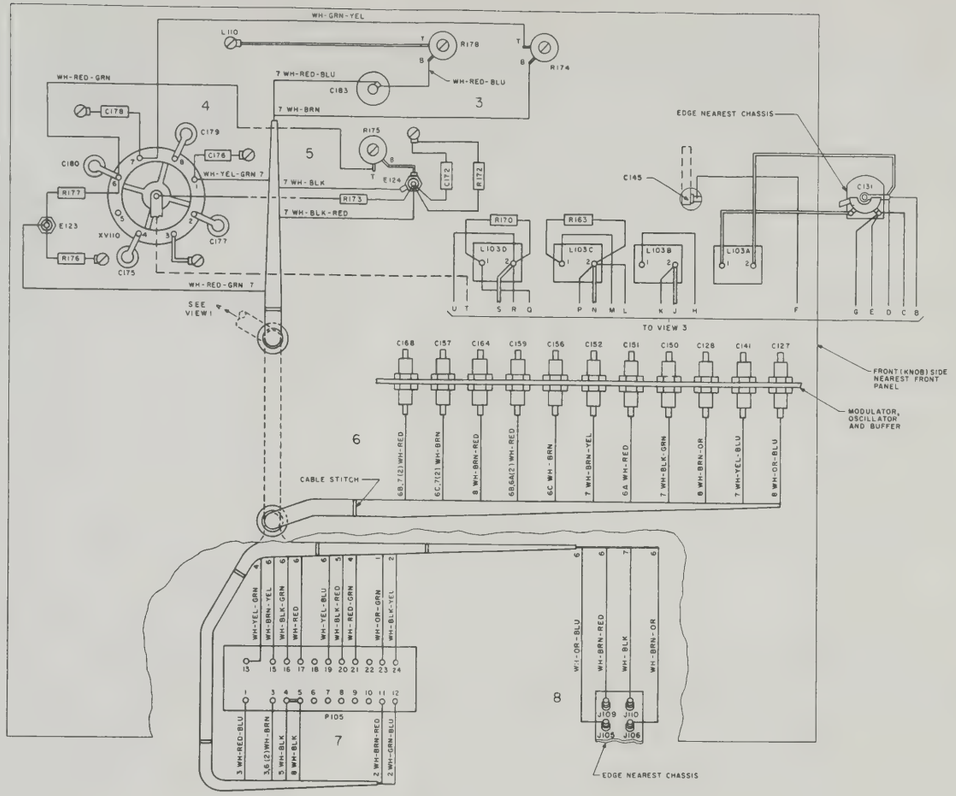

VIEW 2
UPPER SIDE OF EXCITER UNIT CHASSIS

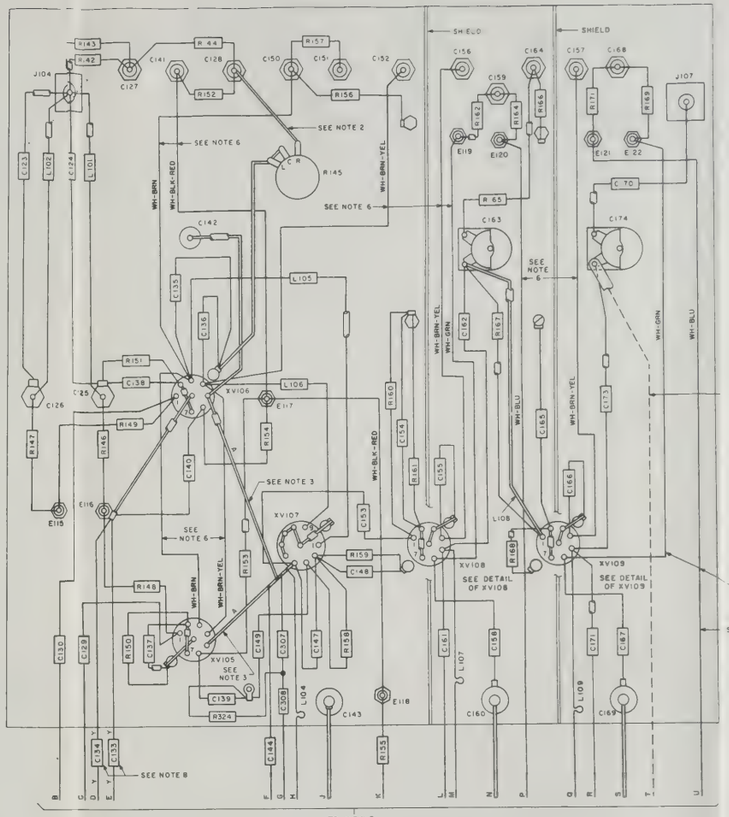

VIEW 3
MODULATOR, OSCILLATOR AND BUFFER, WIRING SIDE

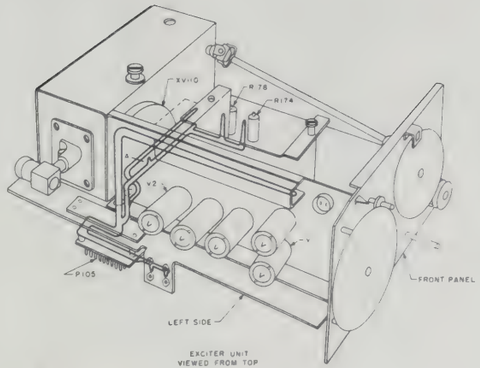

EXCITER UNIT
VIEWED FROM TOP

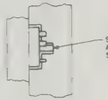

DETAIL OF
XV108 AND XV109

AREA NUMBERS	VIEW
1 - 2	1
3 - 8	2

NOTES

1. WIRING NOT OTHERWISE SPECIFIED IS 22 GAUGE WIRE WITH EXTRUDED NYLON JACKET
2. ═══ DENOTES 20 GAUGE BARE TINNED ANNEALED COPPER WIRING
3. ═══ (A) DENOTES 18 GAUGE BARE TINNED ANNEALED COPPER WIRING
4. BARE STRAP WIRING IS RUN AS SHORT AND DIRECT AS POSSIBLE
5. WIRING NOT OTHERWISE SPECIFIED IS CONNECTED DIRECTLY FROM TERMINAL TO TERMINAL IN THE SHORTEST POSSIBLE MANNER
6. THIS WIRING IS RUN LOOSE AND DRESSED BACK AGAINST THE CHASSIS IN THE MOST CONVENIENT MANNER
7. ▭ DENOTES IMPREGNATED FIBRE GLASS SLEEVING
8. Y DENOTES LEADS OF COMPONENTS WHICH ARE WIRED SO AS TO PROVIDE NOT MORE THAN 1/4 INCH OR LESS THAN 1/8 INCH OF WIRE BETWEEN COMPONENT AND TERMINAL WIRED THERETO
9. T DENOTES TOP TERMINAL, B DENOTES BOTTOM (NEAREST MOUNTING SURFACE) TERMINAL
10. THIS IS A TINNED COPPER STRAP CONNECTOR .010 INCH THICK BY 3/8 INCH WIDE BY 1-3/8 INCH LONG
11. THIS WIRING IS 22 GAUGE WIRE WITH AN EXTRUDED NYLON JACKET AND INSULATION WHICH HAS A MAXIMUM RATED WORKING VOLTAGE OF 600 VOLTS AC RMS AND 1000 VOLTS DC

TMART 319

381345 O - 56 (In pocket)

Figure 285. Rf exciter plug-in assembly, wiring diagram for types 2 and 3 procured on Order No. 16811–Phila–51 and serial numbers 1 and above on Order No. 32146–Phila–51.

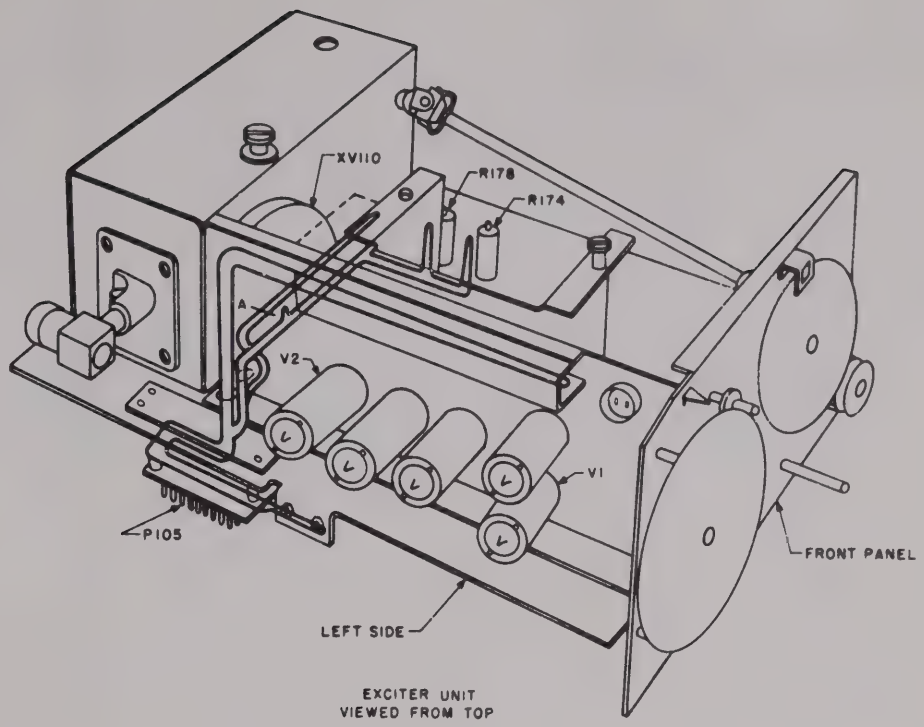

EXCITER UNIT
VIEWED FROM TOP

SEE NOTE 10

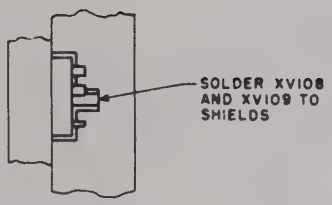

DETAIL OF
XV108 AND XV109

SEE NOTE 6

SEE NOTE 1

AREA NUMBERS	VIEW
1 - 2	1
3 - 8	2

NOTES:

1. WIRING NOT OTHERWISE SPECIFIED IS 22 GAUGE WIRE WITH EXTRUDED NYLON JACKET.
2. ═══ DENOTES 20 GAUGE BARE TINNED ANNEALED COPPER WIRING.
3. A ═══ DENOTES 18 GAUGE BARE TINNED ANNEALED COPPER WIRING.
4. BARE STRAP WIRING IS RUN AS SHORT AND DIRECT AS POSSIBLE.
5. WIRING NOT OTHERWISE SPECIFIED IS CONNECTED DIRECTLY FROM TERMINAL TO TERMINAL IN THE SHORTEST POSSIBLE MANNER.
6. THIS WIRING IS RUN LOOSE AND DRESSED BACK AGAINST THE CHASSIS IN THE MOST CONVENIENT MANNER.
7. ▭ DENOTES IMPREGNATED FIBRE GLASS SLEEVING
8. LEADS FROM C133 AND C134 TO GROUND LUG SHOULD NOT EXCEED 3/8 INCH IN LENGHT AFTER SOLDERING. LEADS FROM C131 TO C133 AND C134 SHOULD NOT EXCEED 1/4 INCH AFTER SOLDERING.
9. T DENOTES TOP TERMINAL, B DENOTES BOTTOM (NEAREST MOUNTING SURFACE) TERMINAL.
10. THIS IS A TINNED COPPER STRAP CONNECTOR .010 INCH THICK BY 3/8 INCH WIDE BY 1 3/8 INCH LONG
11. THIS WIRING IS 22 GAUGE WIRE WITH AN EXTRUDED NYLON JACKET AND INSULATION WHICH HAS A MAXIMUM RATED WORKING VOLTAGE OF 600 VOLTS AC RMS AND 1000 VOLTS DC.

381345 O - 56 (In pocket)

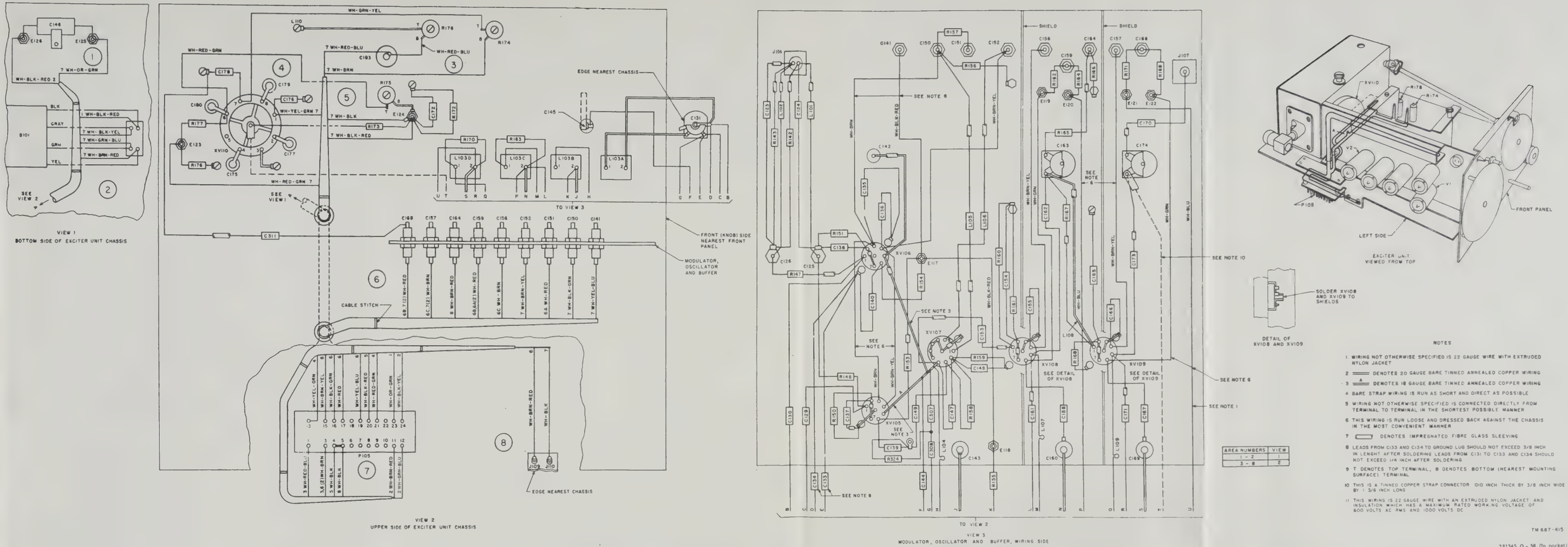

Figure 286. Rf exciter plug-in assembly, wiring diagram for types 4 and 5 procured on Order No. 16811-Phila-51

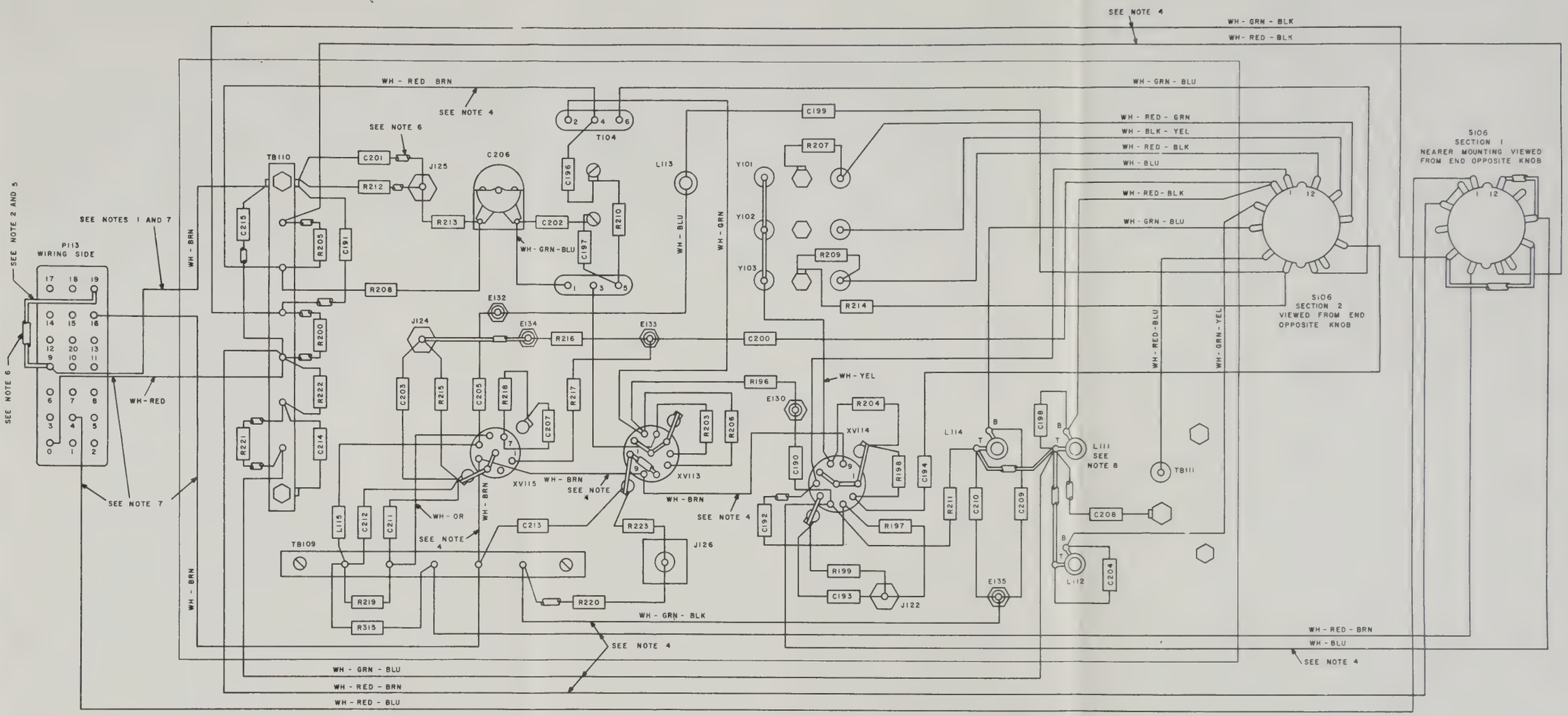

CHASSIS, WIRING SIDE

S106 SW POS AS SHOWN ON SCHEMATIC DIAGRAM		SWITCH PANEL MARKING	SWITCH CONTACTS MADE	
			SECTION 1	SECTION 2
1	A	DECADE CHANS	1 - 2	1 - 2
	B		5 - 6	5 - 6
	C		9 - 10	9 - 10
2	A	UNIT CHANS	1 - 3	1 - 3
	B		5 - 7	5 - 7
	C		9 - 11	9 - 11
3	A	DISCR CENTER	1 - 4	1 - 4
	B		5 - 8	5 - 8
	C		9 - 12	9 - 12

NOTES:

1. WIRING NOT OTHERWISE SPECIFIED IS 22 GAUGE WIRE WITH EXTRUDED NYLON JACKET.
2. ═══ DENOTES 20 GAUGE BARE TINNED ANNEALED COPPER WIRING.
3. WIRING NOT OTHERWISE SPECIFIED IS CONNECTED DIRECTLY FROM TERMINAL TO TERMINAL IN THE SHORTEST POSSIBLE MANNER.
4. THIS WIRING IS RUN LOOSE AND DRESSED BACK AGAINST THE CHASSIS IN THE MOST CONVENIENT MANNER.
5. BARE STRAP WIRING IS RUN AS SHORT AND AS DIRECT AS POSSIBLE.
6. ▭ DENOTES IMPREGNATED FIBRE GLASS SLEEVING.
7. THIS WIRING IS FORMED INTO A CABLE AND IS SO TIED THAT LEADS ARE KEPT AWAY FROM THE TERMINAL STRIP. SUFFICIENT SLACK IS ALLOWED FOR REMOVAL OF CONNECTOR P113.
8. T DENOTES TOP TERMINAL, B DENOTES BOTTOM (NEAREST MOUNTING SURFACE) TERMINAL.

Figure 287. Crystal oscillator and pulse generator plug-in assembly, wiring diagram.

TM 687-316

381345 O - 56 (In pocket)

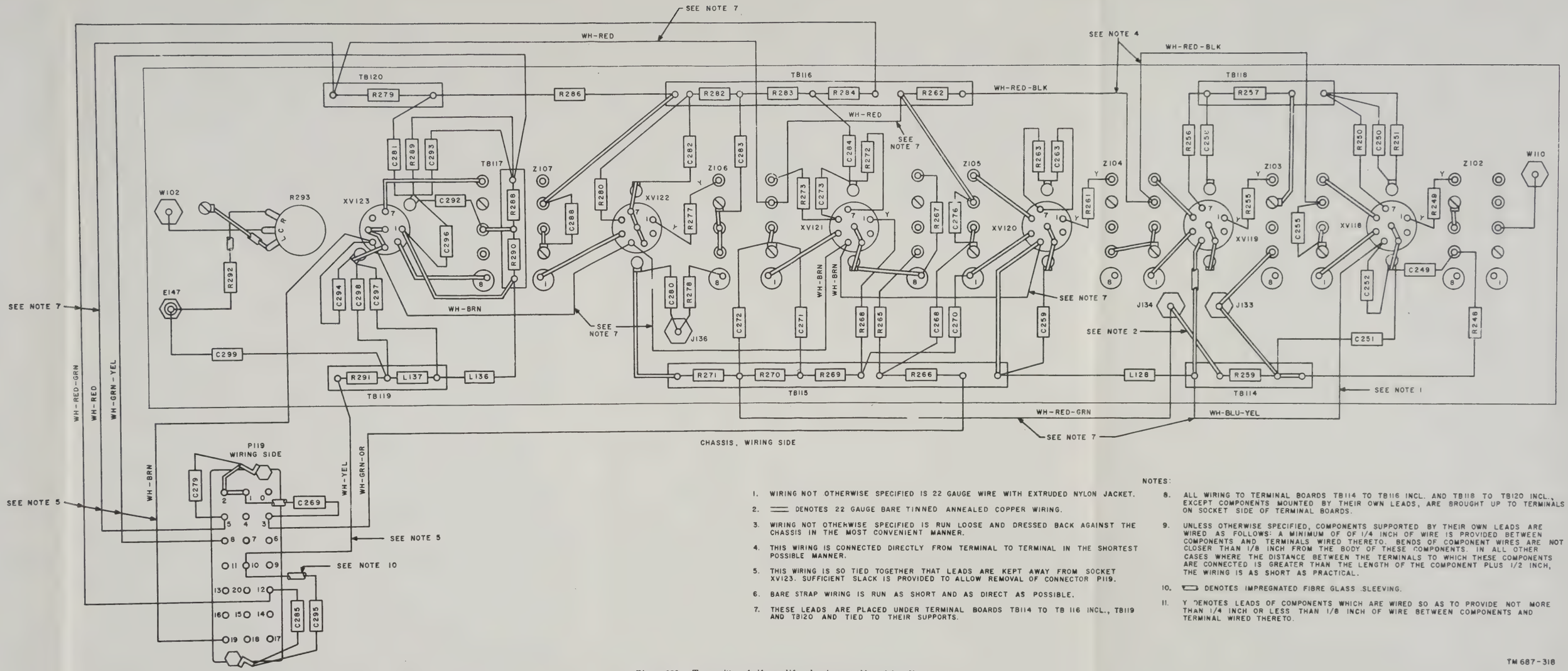

NOTES:

1. WIRING NOT OTHERWISE SPECIFIED IS 22 GAUGE WIRE WITH EXTRUDED NYLON JACKET.
2. ═══ DENOTES 22 GAUGE BARE TINNED ANNEALED COPPER WIRING.
3. WIRING NOT OTHERWISE SPECIFIED IS RUN LOOSE AND DRESSED BACK AGAINST THE CHASSIS IN THE MOST CONVENIENT MANNER.
4. THIS WIRING IS CONNECTED DIRECTLY FROM TERMINAL TO TERMINAL IN THE SHORTEST POSSIBLE MANNER.
5. THIS WIRING IS SO TIED TOGETHER THAT LEADS ARE KEPT AWAY FROM SOCKET XV123. SUFFICIENT SLACK IS PROVIDED TO ALLOW REMOVAL OF CONNECTOR P119.
6. BARE STRAP WIRING IS RUN AS SHORT AND AS DIRECT AS POSSIBLE.
7. THESE LEADS ARE PLACED UNDER TERMINAL BOARDS TB114 TO TB 116 INCL., TB119 AND TB120 AND TIED TO THEIR SUPPORTS.
8. ALL WIRING TO TERMINAL BOARDS TB114 TO TB116 INCL. AND TB118 TO TB120 INCL., EXCEPT COMPONENTS MOUNTED BY THEIR OWN LEADS, ARE BROUGHT UP TO TERMINALS ON SOCKET SIDE OF TERMINAL BOARDS.
9. UNLESS OTHERWISE SPECIFIED, COMPONENTS SUPPORTED BY THEIR OWN LEADS ARE WIRED AS FOLLOWS: A MINIMUM OF OF 1/4 INCH OF WIRE IS PROVIDED BETWEEN COMPONENTS AND TERMINALS WIRED THERETO. BENDS OF COMPONENT WIRES ARE NOT CLOSER THAN 1/8 INCH FROM THE BODY OF THESE COMPONENTS. IN ALL OTHER CASES WHERE THE DISTANCE BETWEEN THE TERMINALS TO WHICH THESE COMPONENTS ARE CONNECTED IS GREATER THAN THE LENGTH OF THE COMPONENT PLUS 1/2 INCH, THE WIRING IS AS SHORT AS PRACTICAL.
10. ▭ DENOTES IMPREGNATED FIBRE GLASS SLEEVING.
11. Y DENOTES LEADS OF COMPONENTS WHICH ARE WIRED SO AS TO PROVIDE NOT MORE THAN 1/4 INCH OR LESS THAN 1/8 INCH OF WIRE BETWEEN COMPONENTS AND TERMINAL WIRED THERETO.

Figure 289. Transmitter afc if. amplifier plug-in assembly, wiring diagram.

TM 687-318

381345 O - 56 (In pocket)

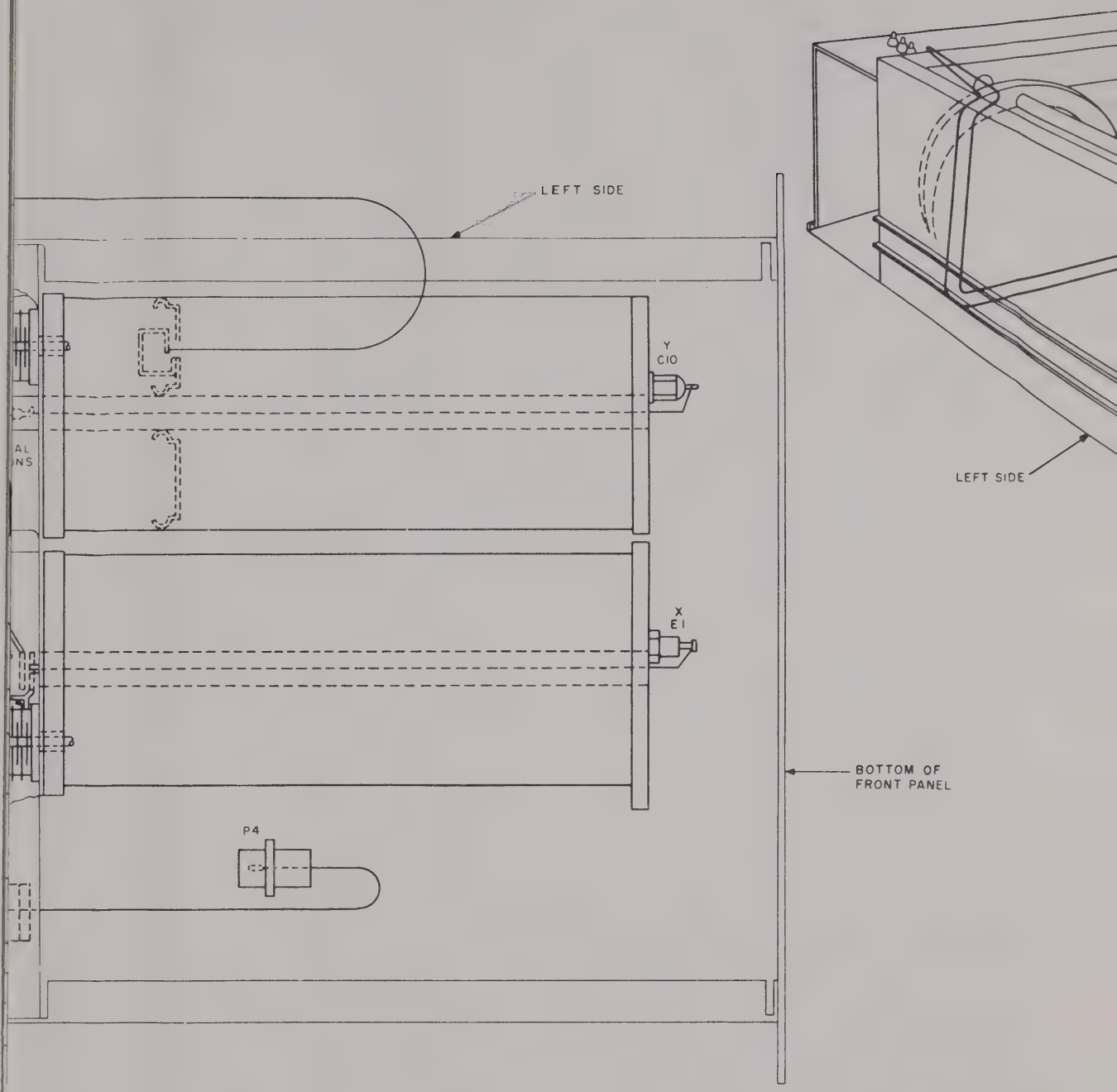

VIEW 3
BOTTOM VIEW

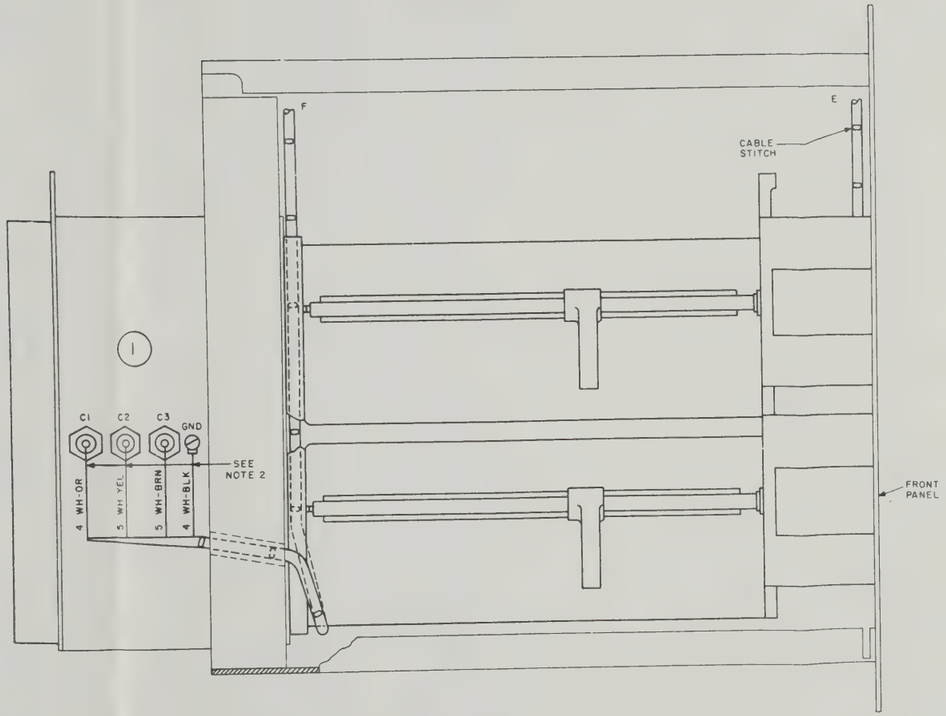

VIEW 1
TOP VIEW
COVER REMOVED

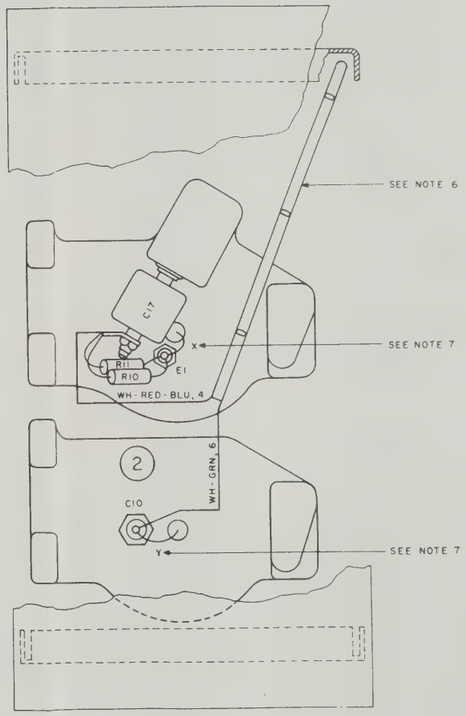

FRONT
WIRING OF CAVITIES
FRONT PANEL REMOVED

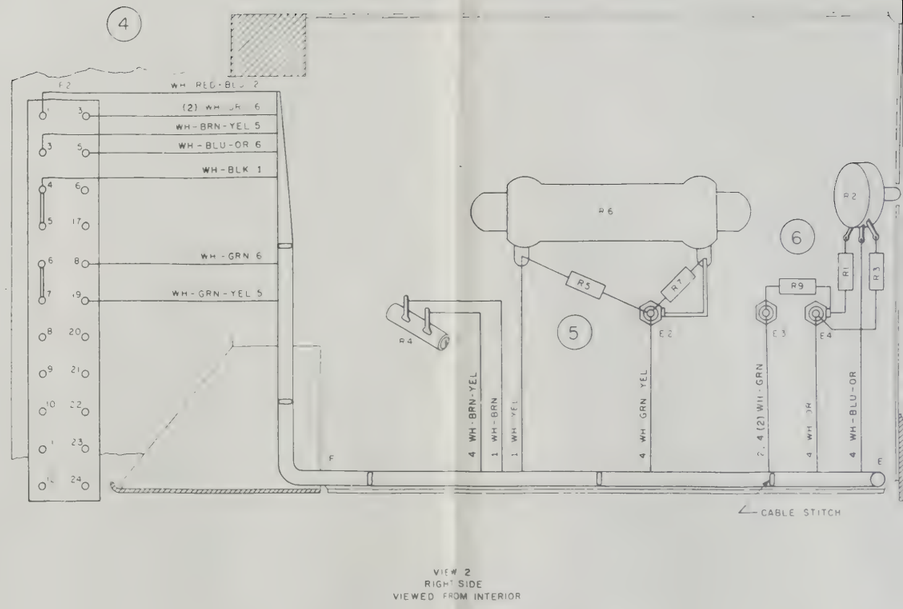

VIEW 2
RIGHT SIDE
VIEWED FROM INTERIOR

Figure 292. Radio Frequency Amplifier AM-912/TRC

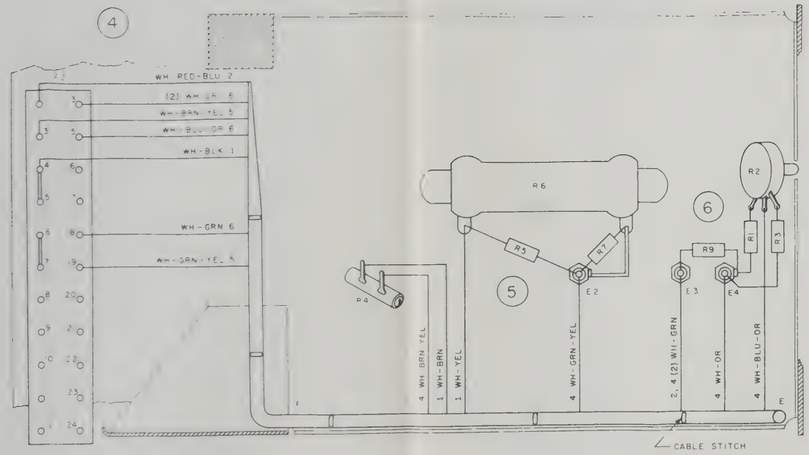

VIEW 2
RIGHT SIDE
VIEWED FROM INTERIOR

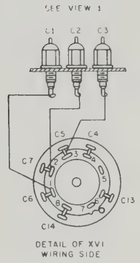

DETAIL OF XVI
WIRING SIDE

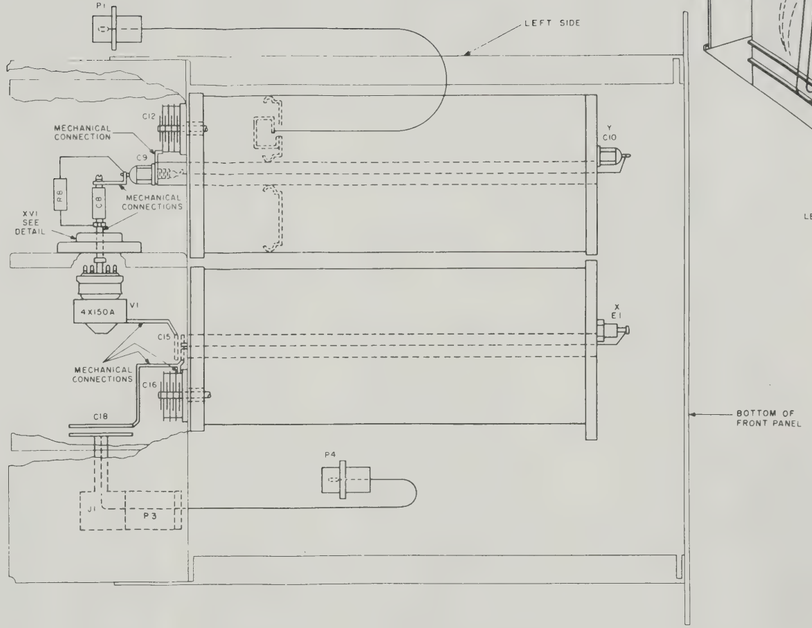

VIEW 3
BOTTOM VIEW

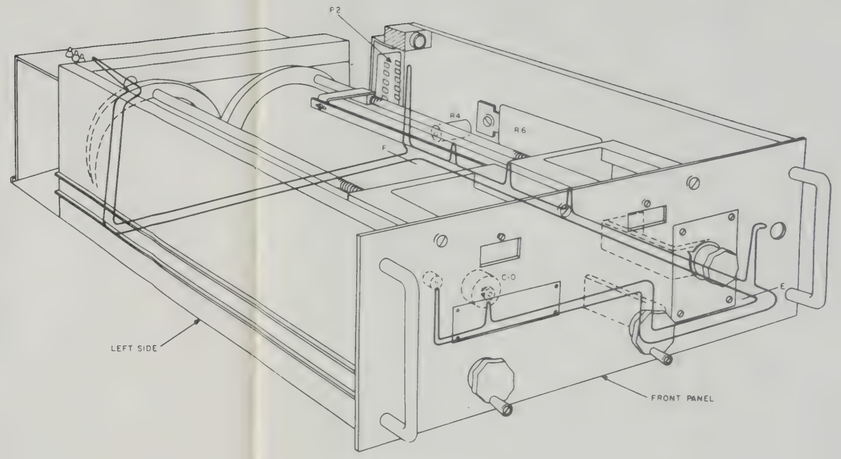

AMPLIFIER, RADIO FREQUENCY AM-912/TRC

NOTES:

1. WIRING NOT OTHERWISE SPECIFIED IS 22 GAUGE WIRE WITH EXTRUDED NYLON JACKET
2. THIS WIRING IS 16 GAUGE WIRE WITH EXTRUDED NYLON JACKET.
3. ═══ DENOTES 20 GAUGE BARE TINNED ANNEALED COPPER WIRING.
4. BARE STRAP WIRING IS RUN AS SHORT AND AS DIRECT AS POSSIBLE.
5. WIRING NOT OTHERWISE SPECIFIED IS CONNECTED DIRECTLY FROM TERMINAL TO TERMINAL IN THE SHORTEST POSSIBLE MANNER
6. THIS IS PART OF THE CABLE ASSEMBLY
7. FOR INTERNAL CONTINUITY CHECK, SEE VIEW 3

Figure 292. Radio Frequency Amplifier AM-912/TRC, wiring diagram

TM687-321

381345 O - 56 (in pocket)

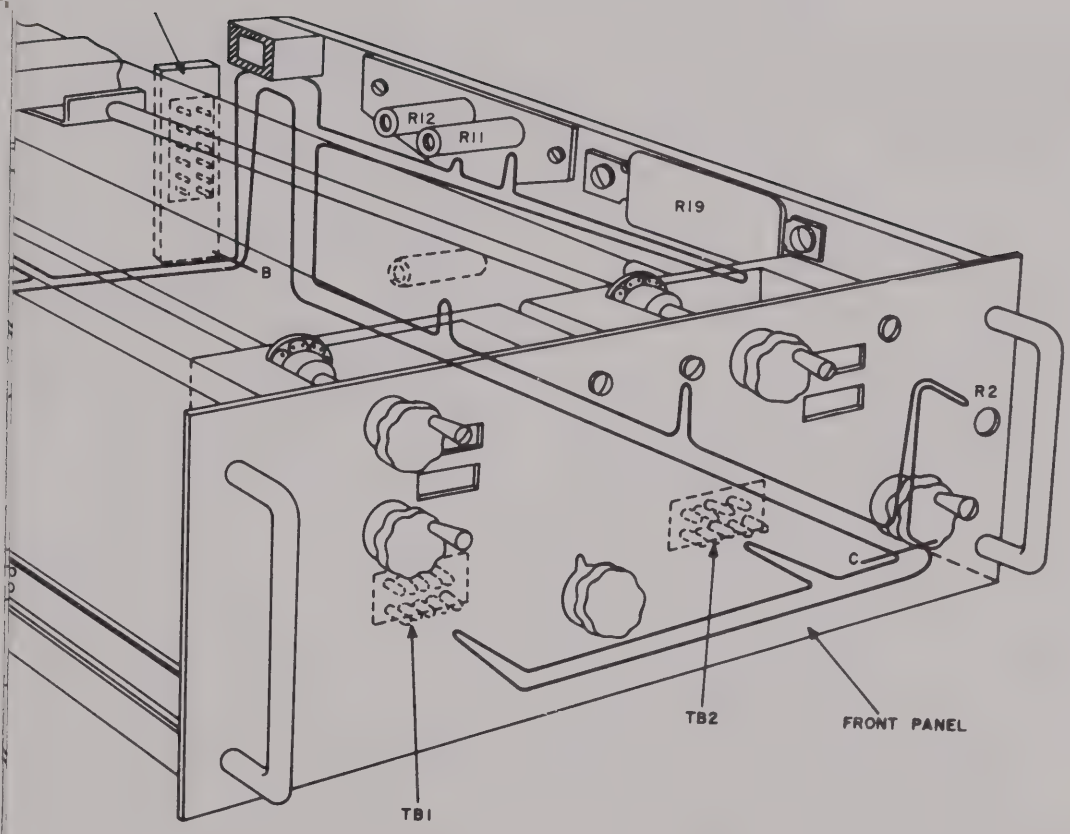

AMPLIFIER-MULTIPLIER, RADIO FREQUENCY AM 915/TRC

NOTES:

1. WIRING NOT OTHERWISE SPECIFIED IS 22 GAUGE WIRE WITH EXTRUDED NYLON JACKET.
2. THIS WIRING IS 16 GAUGE WIRE WITH EXTRUDED NYLON JACKET.
3. ═══ DENOTES 20 GAUGE BARE TINNED ANNEALED COPPER WIRING.
4. BARE STRAP WIRING IS RUN AS SHORT AND AS DIRECT AS POSSIBLE.
5. M ═══ DENOTES METAL TUBING.

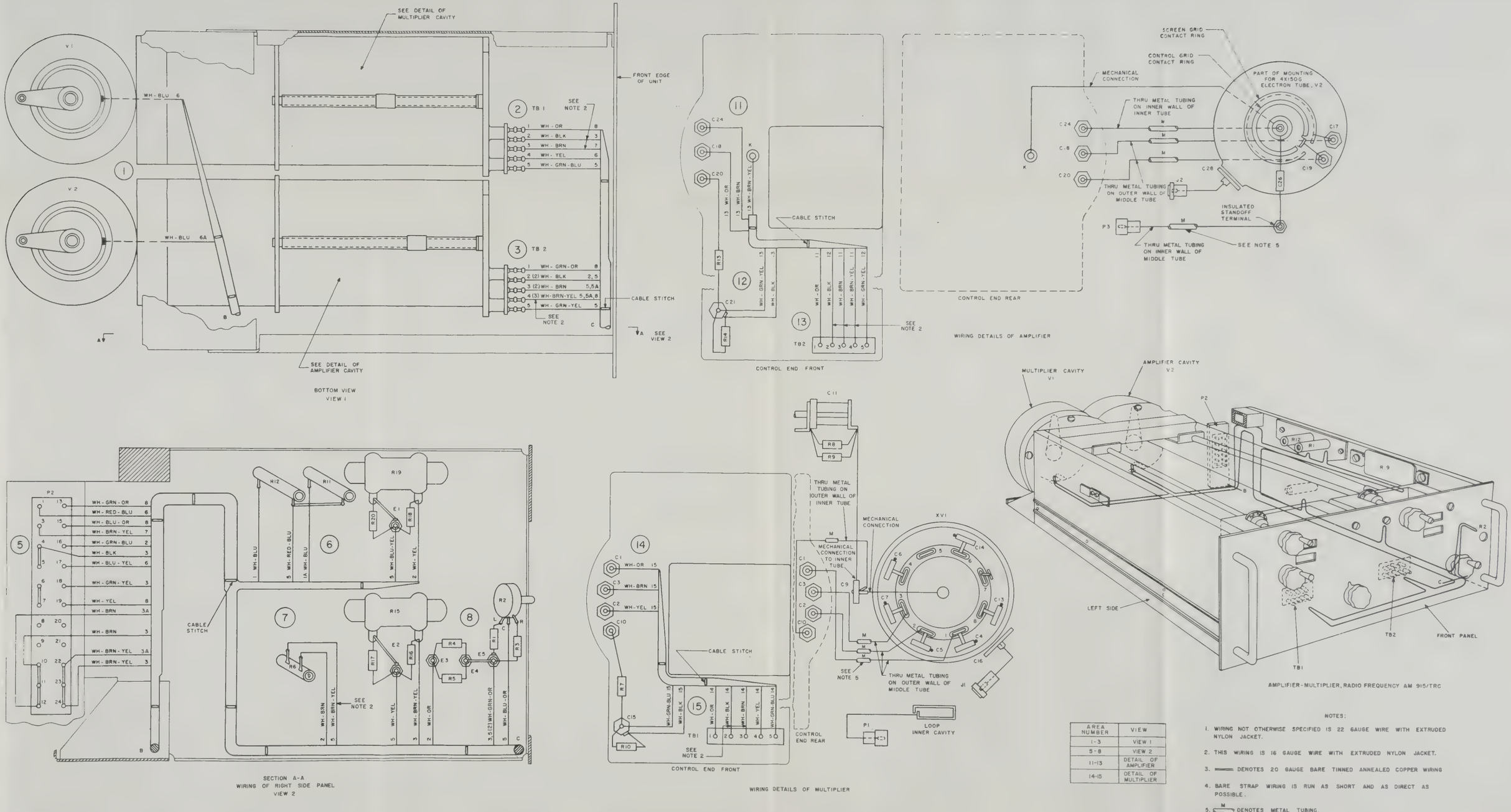

AREA NUMBER	VIEW
1-3	VIEW 1
5-8	VIEW 2
11-13	DETAIL OF AMPLIFIER
14-15	DETAIL OF MULTIPLIER

NOTES:

1. WIRING NOT OTHERWISE SPECIFIED IS 22 GAUGE WIRE WITH EXTRUDED NYLON JACKET.
2. THIS WIRING IS 16 GAUGE WIRE WITH EXTRUDED NYLON JACKET.
3. ——— DENOTES 20 GAUGE BARE TINNED ANNEALED COPPER WIRING
4. BARE STRAP WIRING IS RUN AS SHORT AND AS DIRECT AS POSSIBLE.
5. M ——— DENOTES METAL TUBING.

Figure 893. Radio Frequency Amplifier-Multiplier AM-915/TRC, wiring diagram.

TM 687-322

381345 O - 56 (In pocket)

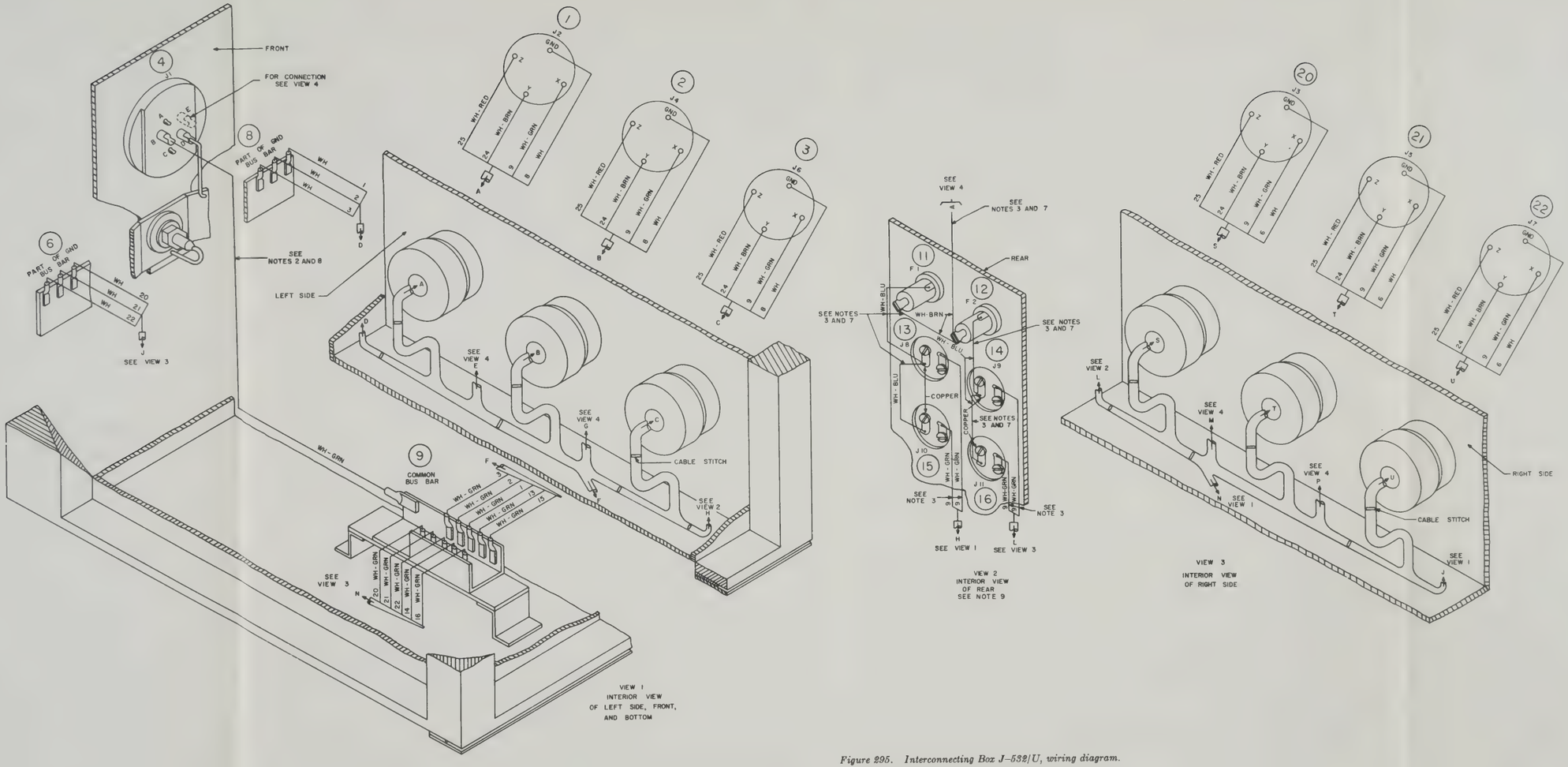

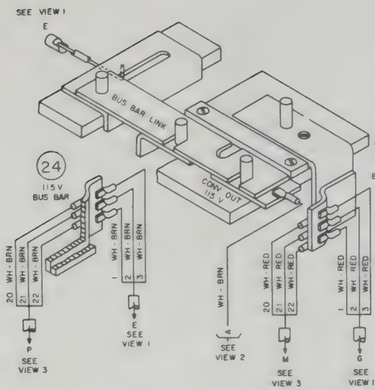

VIEW 4
DETAIL OF
BUS BAR LINK

NOTES:

1. WIRING NOT OTHERWISE SPECIFIED IS 12 GAUGE WIRE WITH EXTRUDED NYLON JACKET
2. THIS WIRING IS 6 GAUGE WIRE WITH EXTRUDED NYLON JACKET
3. THIS WIRING IS 16 GAUGE WIRE WITH EXTRUDED NYLON JACKET
4. ═══ DENOTES 20 GAUGE BARE TINNED ANNEALED COPPER WIRING
5. STRAP WIRING IS RUN AS SHORT AND AS DIRECT AS POSSIBLE.
6. WIRING NOT OTHERWISE SPECIFIED IS RUN IN A CABLE FORM
7. THIS WIRING IS CONNECTED DIRECTLY FROM TERMINAL TO TERMINAL IN THE SHORTEST POSSIBLE MANNER.
8. THIS WIRING IS RUN LOOSE AND DRESSED BACK AGAINST CONNECTING BOX
9. TERMINALS ON CONNECTORS J8, J9, J10, AND J11 ARE SLEEVED WITH 1/2 INCH LONG IMPREGNATED FIBRE GLASS SLEEVING.

AREA NUMBER	VIEW
1-9	1
11-16	2
20-22	3
24-25	4

Figure 295. Interconnecting Box J-532/U, wiring diagram.

TM 687-324

381345 O - 56 (In pocket)

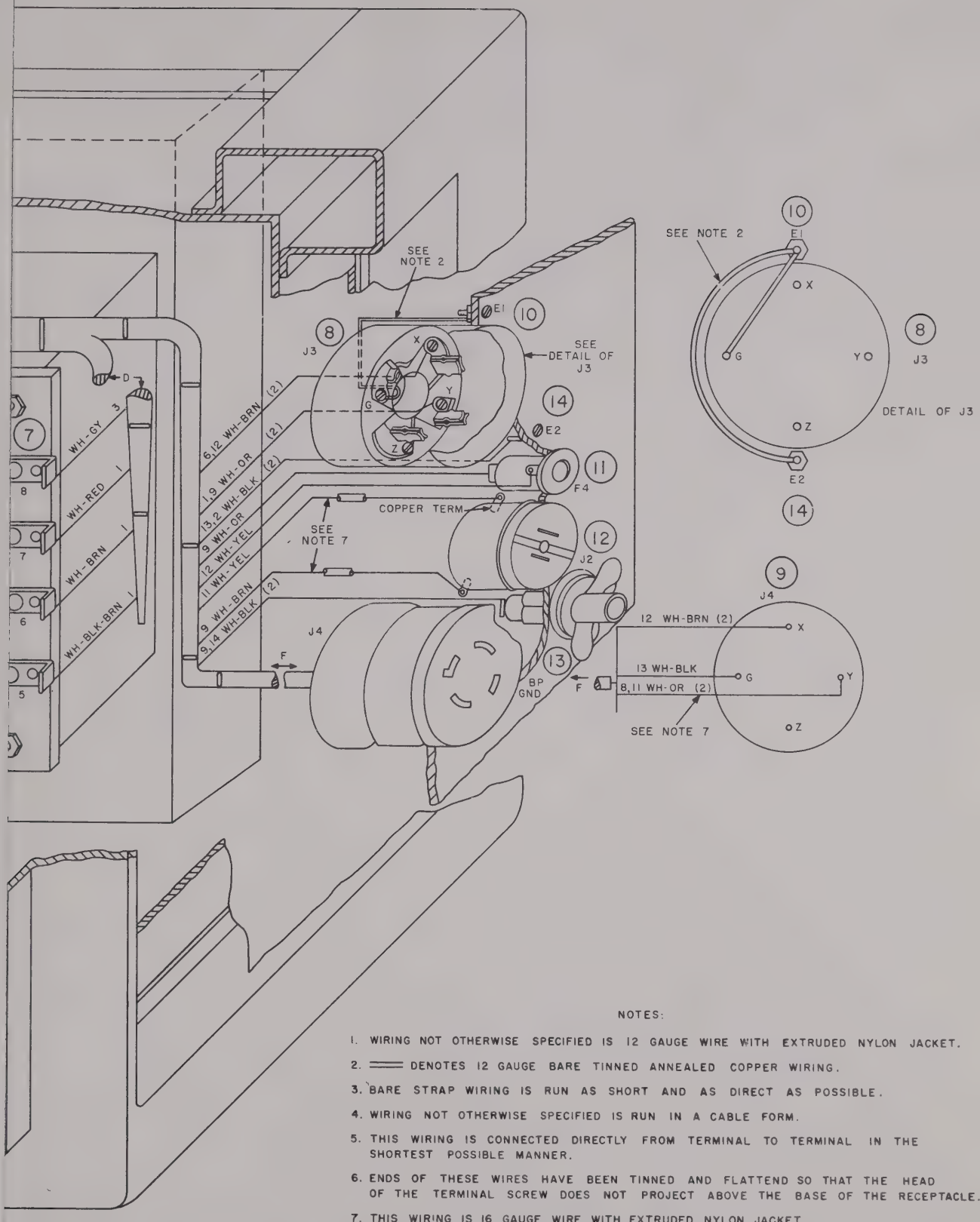

NOTES:

1. WIRING NOT OTHERWISE SPECIFIED IS 12 GAUGE WIRE WITH EXTRUDED NYLON JACKET.
2. ═══ DENOTES 12 GAUGE BARE TINNED ANNEALED COPPER WIRING.
3. BARE STRAP WIRING IS RUN AS SHORT AND AS DIRECT AS POSSIBLE.
4. WIRING NOT OTHERWISE SPECIFIED IS RUN IN A CABLE FORM.
5. THIS WIRING IS CONNECTED DIRECTLY FROM TERMINAL TO TERMINAL IN THE SHORTEST POSSIBLE MANNER.
6. ENDS OF THESE WIRES HAVE BEEN TINNED AND FLATTEND SO THAT THE HEAD OF THE TERMINAL SCREW DOES NOT PROJECT ABOVE THE BASE OF THE RECEPTACLE.
7. THIS WIRING IS 16 GAUGE WIRE WITH EXTRUDED NYLON JACKET.
8. ▭ DENOTES IMPREGNATED FIBRE GLASS SLEEVING.

TM 687-325

r TF–167/TRC, wiring diagram.

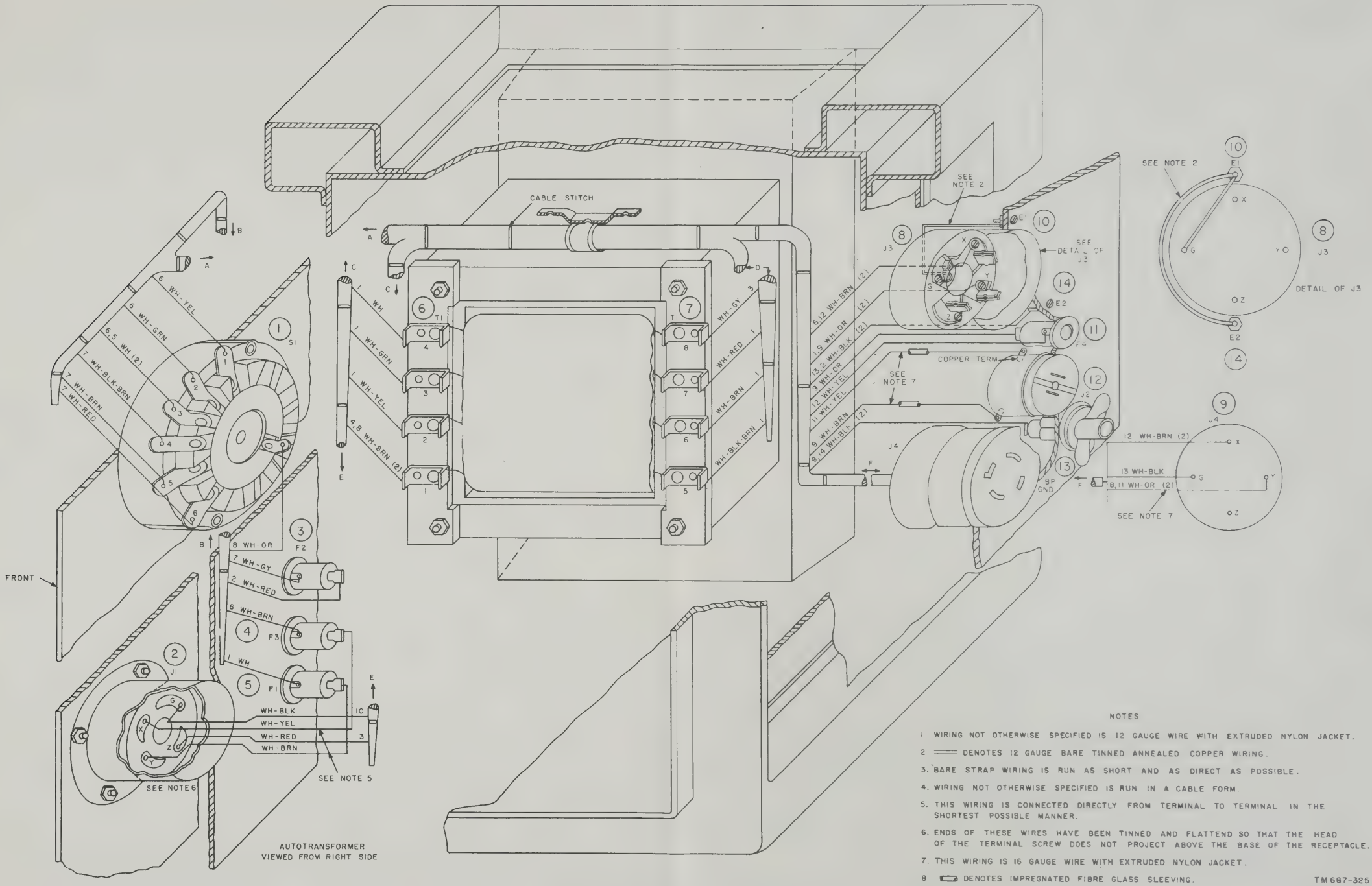

Figure 296. Autotransformer TF-167/TRC, wiring diagram.

NOTES

1. WIRING NOT OTHERWISE SPECIFIED IS 12 GAUGE WIRE WITH EXTRUDED NYLON JACKET.
2. ═══ DENOTES 12 GAUGE BARE TINNED ANNEALED COPPER WIRING.
3. BARE STRAP WIRING IS RUN AS SHORT AND AS DIRECT AS POSSIBLE.
4. WIRING NOT OTHERWISE SPECIFIED IS RUN IN A CABLE FORM.
5. THIS WIRING IS CONNECTED DIRECTLY FROM TERMINAL TO TERMINAL IN THE SHORTEST POSSIBLE MANNER.
6. ENDS OF THESE WIRES HAVE BEEN TINNED AND FLATTEND SO THAT THE HEAD OF THE TERMINAL SCREW DOES NOT PROJECT ABOVE THE BASE OF THE RECEPTACLE.
7. THIS WIRING IS 16 GAUGE WIRE WITH EXTRUDED NYLON JACKET.
8. ▭ DENOTES IMPREGNATED FIBRE GLASS SLEEVING.

TM 687-325

381345 O - 56 (In pocket)

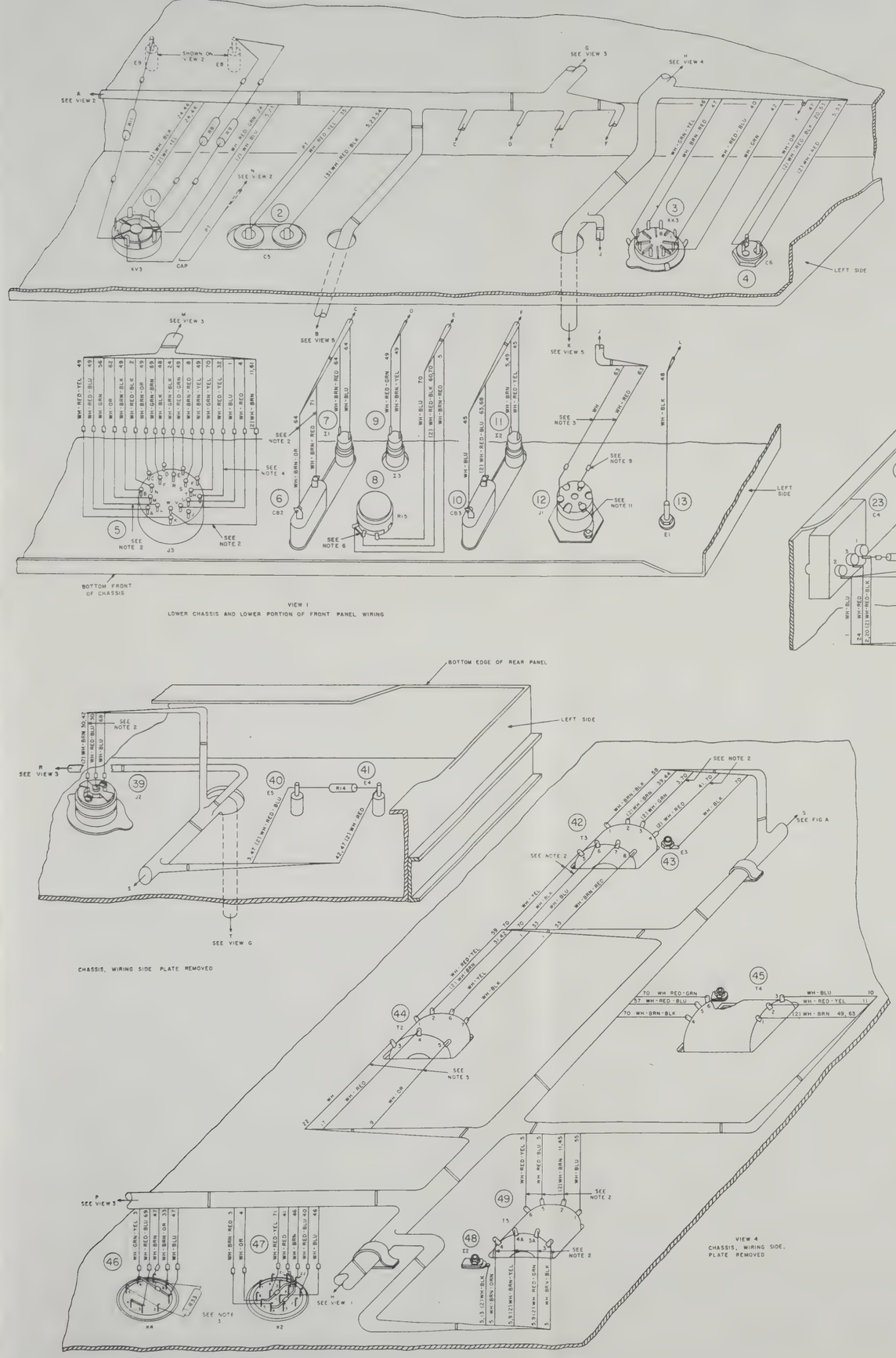

VIEW 1
LOWER CHASSIS AND LOWER PORTION OF FRONT PANEL WIRING

VIEW 4
CHASSIS, WIRING SIDE, PLATE REMOVED

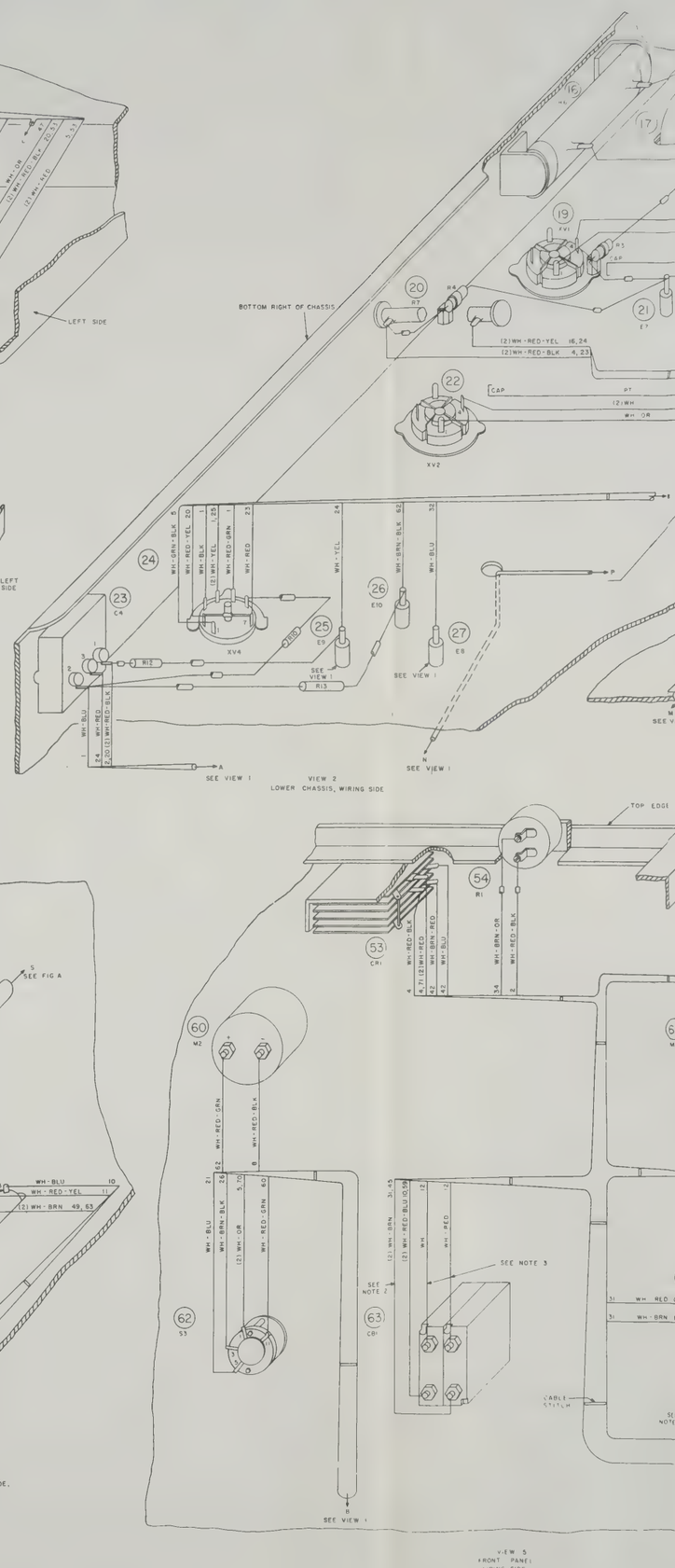

VIEW 2
LOWER CHASSIS, WIRING SIDE

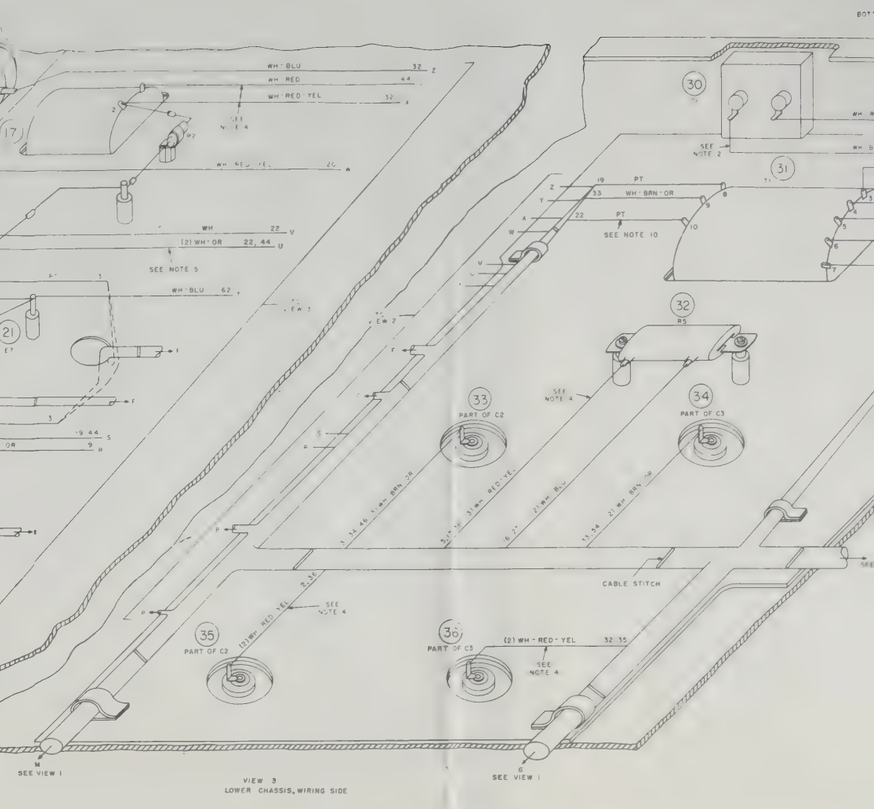

VIEW 3
LOWER CHASSIS, WIRING SIDE

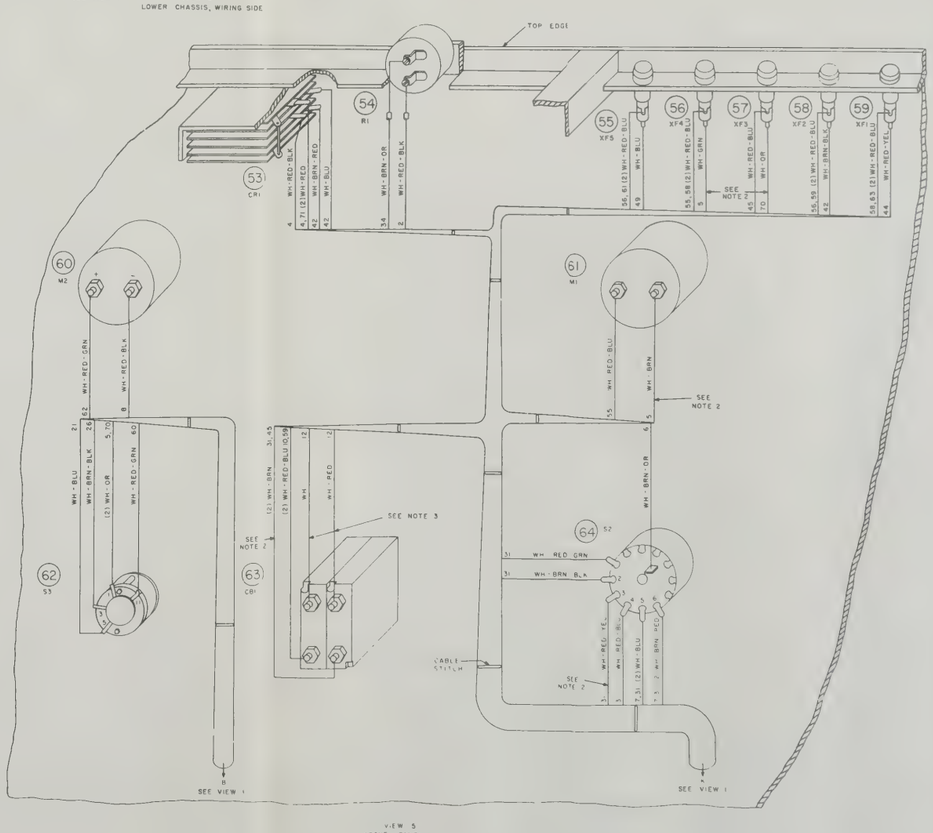

VIEW 5
FRONT PANEL WIRING SIDE

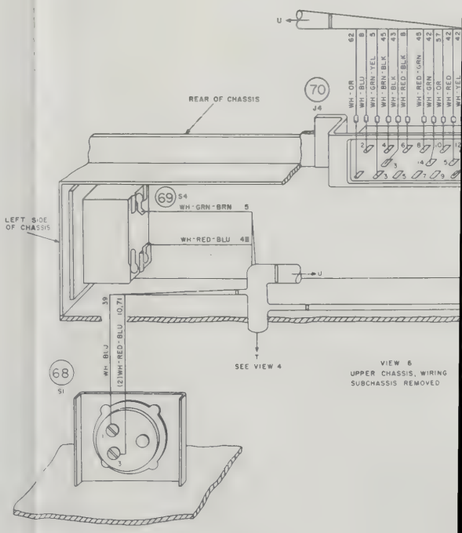

VIEW 6
UPPER CHASSIS, WIRING SUBCHASSIS REMOVED

Figure 297. Power Supply PP-685/TRC, less low-voltage rectifier plug-in assembly, wiring diagram.

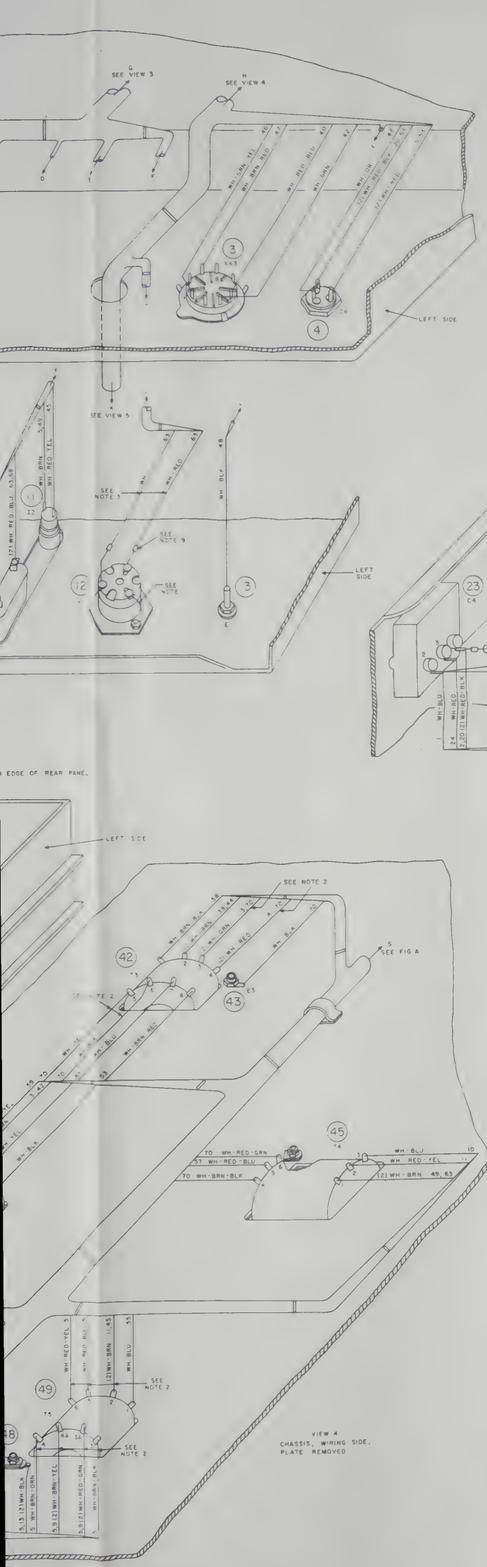

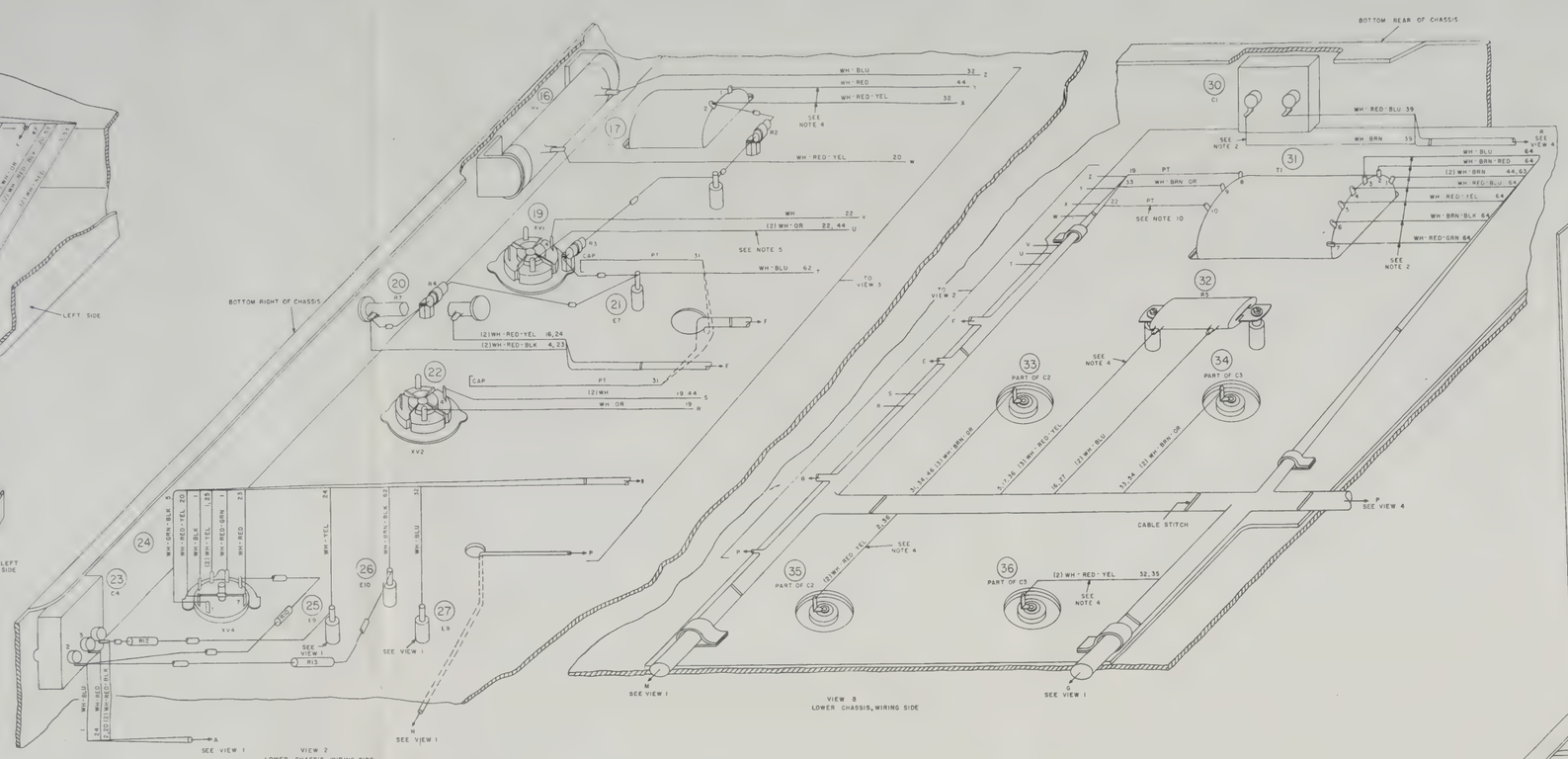

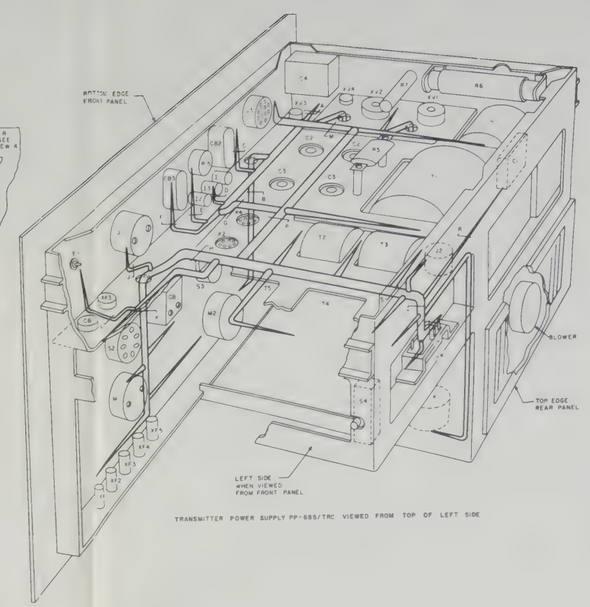

TRANSMITTER POWER SUPPLY PP-685/TRC VIEWED FROM TOP OF LEFT SIDE

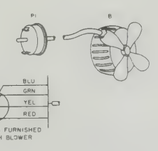

AREA NUMBERS	VIEW
1-15	1
16-27	2
30-36	3
39-49	4
53-64	5

NOTES:

1. WIRING NOT OTHERWISE SPECIFIED IS 20 GAUGE WIRE WITH EXTRUDED NYLON JACKET.
2. THIS WIRING IS 16 GAUGE WIRE WITH EXTRUDED NYLON JACKET.
3. THIS WIRING IS 12 GAUGE WIRE WITH EXTRUDED NYLON JACKET.
4. THIS WIRING IS 20 GAUGE WIRE WITH AN EXTRUDED NYLON JACKET AND INSULATION WHICH HAS A MAXIMUM RATED WORKING VOLTAGE OF 600 VOLTS AC R.M.S. AND 1000 VOLTS DC
5. THIS WIRING IS 16 GAUGE WIRE WITH AN EXTRUDED NYLON JACKET AND INSULATION WHICH HAS A MAXIMUM RATED WORKING VOLTAGE OF 600 VOLTS AC R.M.S. AND 1000 VOLTS DC
6. ═══ DENOTES 20 GAUGE BARE TINNED ANNEALED COPPER WIRING
7. BARE STRAP WIRING IS RUN AS SHORT AND AS DIRECT AS POSSIBLE
8. ALL WIRING, EXCEPT BARE STRAP WIRE AND JUMPER WIRE, IS RUN IN CABLE FORM
9. ▭ DENOTES IMPREGNATED FIBRE GLASS SLEEVING
10. PT DENOTES LEADS WHICH ARE SUPPLIED WITH THE APPARATUS AND RUN IN THE CABLE FORM
11. THIS WIRE IS A JUMPER WIRE
12. ALL SOLDERED CONNECTIONS ARE COVERED WITH A MOISTURE AND FUNGUS RESISTANT COATING.
13. R33 NOT USED ONLY ON ORDER NO 16811-PHILA-51 (SERIAL NUMBERS 1 THROUGH 58)

S3 SW POS AS SHOWN ON SCHEMATIC DIAGRAM	SWITCH PANEL MARKING	SWITCH CONTACTS MADE
1	150 UPPER SCALE	1-3
2	275 LOWER SCALE	1-3
3	750 LOWER SCALE	1-3

Figure 297. Power Supply PP-685/TRC, less low-voltage rectifier plug-in assembly, wiring diagram.

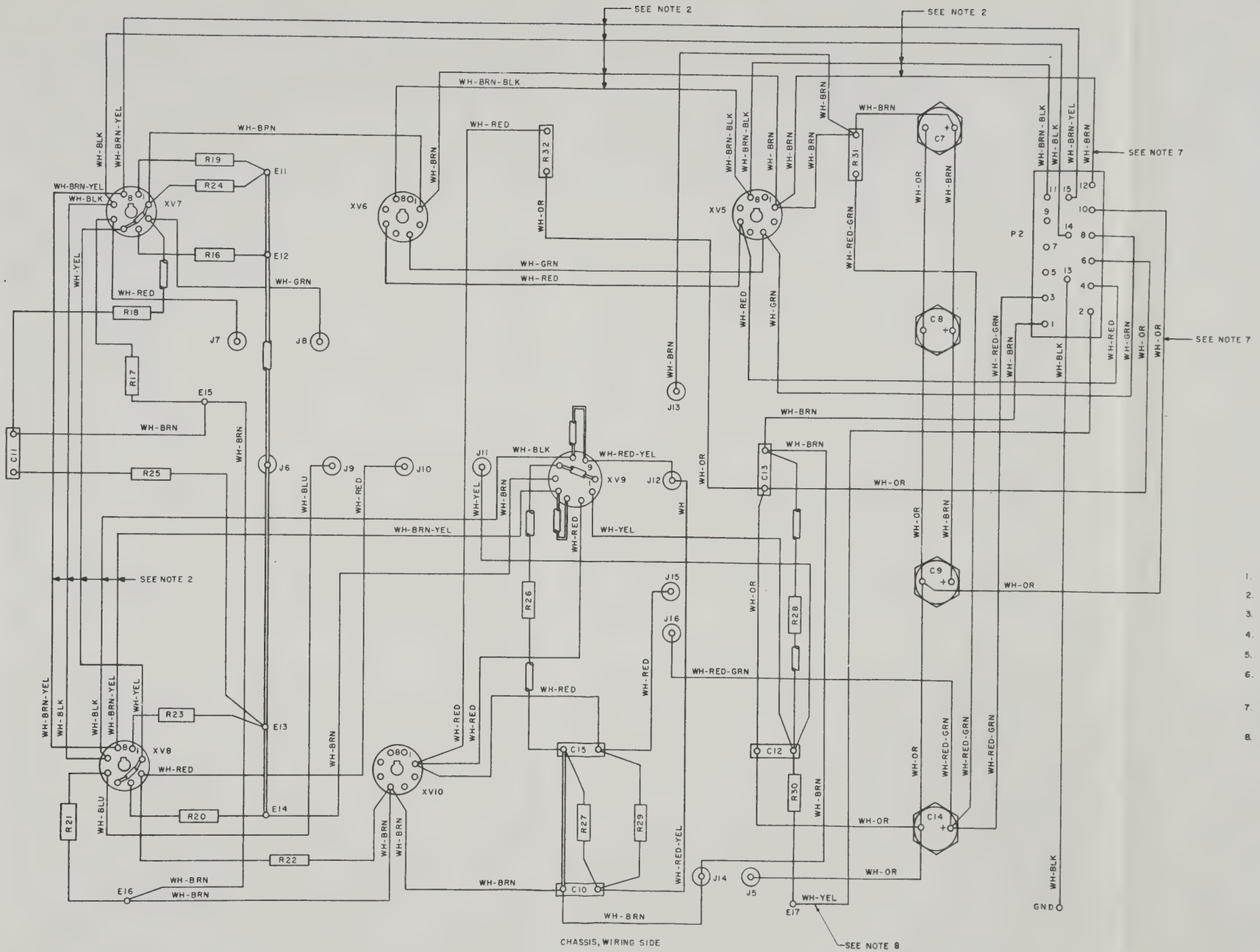

Figure 298. Power Supply PP-685/TRC low-voltage rectifier plug-in assembly, wiring diagram.

NOTES:

1. WIRING NOT OTHERWISE SPECIFIED IS 20 GAUGE WIRE WITH EXTRUDED NYLON JACKET.
2. THIS WIRING IS 16 GAUGE WIRE WITH EXTRUDED NYLON JACKET.
3. ═══ DENOTES 20 GAUGE BARE TINNED ANNEALED COPPER WIRING.
4. BARE STRAP WIRING IS RUN AS SHORT AND AS DIRECT AS POSSIBLE.
5. ▭ DENOTES IMPREGNATED FIBRE GLASS SLEEVING.
6. WIRING NOT OTHERWISE SPECIFIED IS RUN LOOSE AND DRESSED BACK AGAINST THE CHASSIS IN THE MOST CONVENIENT MANNER.
7. THIS TERMINAL IS COVERED WITH 1/2 INCH IMPREGNATED FIBRE GLASS SLEEVING.
8. SOME PLUG-IN UNITS ARE FURNISHED WITH R30 CONNECTED DIRECTLY TO TERMINAL 2 OF P2, IN PLACE OF AS SHOWN

381345 O - 58 (In pocket)

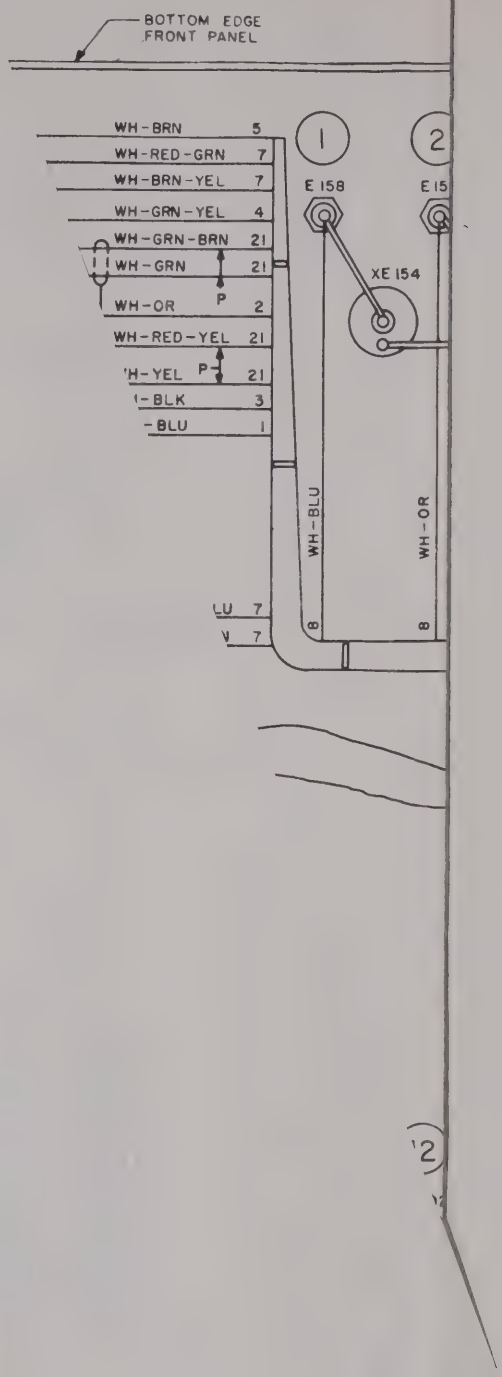
BOTTOM EDGE
FRONT PANEL
WH-BRN 5
WH-RED-GRN 7
WH-BRN-YEL 7
WH-GRN-YEL 4
WH-GRN-BRN 21
WH-GRN 21
P
WH-OR 2
WH-RED-YEL 21
P
21
3
1
E 158
XE 154
WH-BLU
WH-OR
8
8
7
7

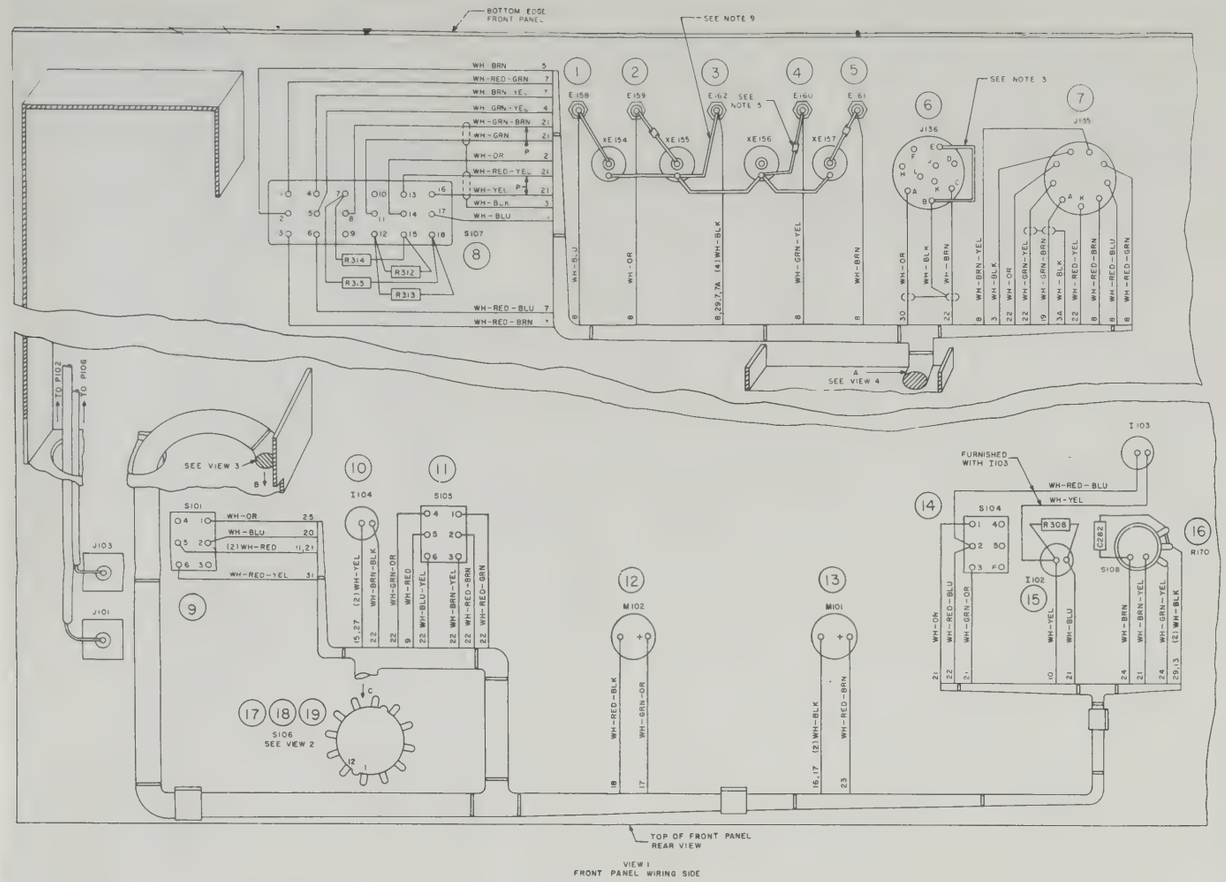

VIEW 1
FRONT PANEL WIRING SIDE

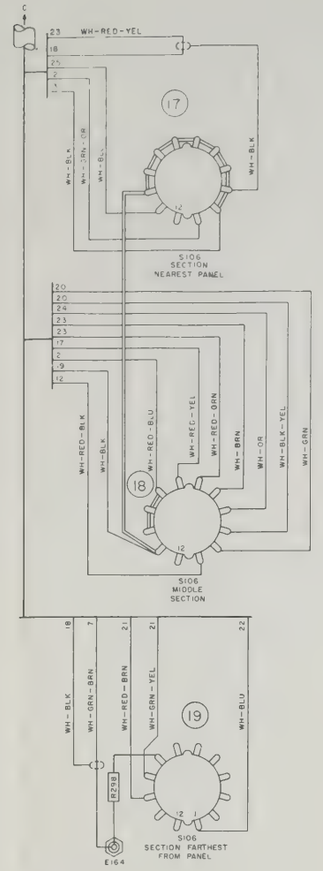

VIEW 2
MEASURE SWITCH AS VIEWED FROM WIRING SIDE

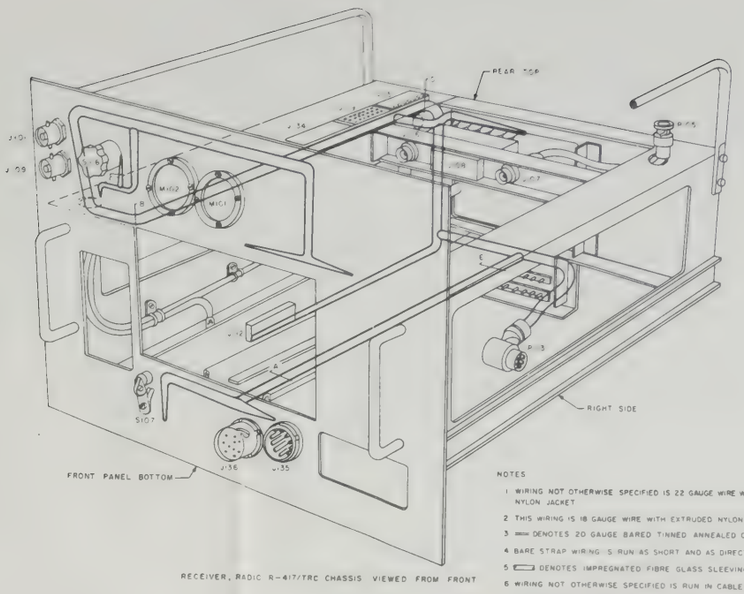

RECEIVER, RADIC R-417/TRC CHASSIS VIEWED FROM FRONT

MEASURE SWITCH INFORMATION

S106 SW POS AS SHOWN ON WIRING DIAGRAM	SWITCH PANEL MARKING	SWITCH CONTACTS MADE SECTIONS 1, 2 AND 3 REAR
1	OSC	1-2
2	MIXER	1-3
3	SIG LEV	1-4
4	1ST LIM	1-5
5	2ND LIM	1-6
6	AFC BAL	-7
7	MTR CAL	-8
8	1KC OUT	-9
9	68KC OUT	-0
10	B+	-1

NOTES

1. WIRING NOT OTHERWISE SPECIFIED IS 22 GAUGE WIRE WITH EXTRUDED NYLON JACKET
2. THIS WIRING IS 18 GAUGE WIRE WITH EXTRUDED NYLON JACKET
3. ═ DENOTES 20 GAUGE BARED TINNED ANNEALED COPPER WIRING
4. BARE STRAP WIRING IS RUN AS SHORT AND AS DIRECT AS POSSIBLE
5. ▭ DENOTES IMPREGNATED FIBRE GLASS SLEEVING
6. WIRING NOT OTHERWISE SPECIFIED IS RUN IN CABLE FORM
7. P DENOTES PAIRED LEADS WHICH ARE TWISTED
8. PASS LEADS CONNECTING TO TB113 UNDER STRIP BEFORE CONNECTING TO TERMINALS
9. SOME UNITS ARE FURNISHED WITH THE FOLLOWING CHANGES
   - A BARE WIRES CONNECTING TO E162, AND XE154 THROUGH XE157 REMOVED
   - B GROUNDING LUG ADDED NEAR E162
   - C FOUR WH-BLK LEADS FROM STATIONS 8, 29.7, AND 7A CONNECTED TO GROUNDING LUG
   - D SHORT 20 GAUGE BARE TINNED ANNEALED COPPER STRAP CONNECTED FROM ADDED GROUNDING LUG TO E162.
10. SOME UNITS ARE FURNISHED WITH THE FOLLOWING CHANGES

STATION	TERMINAL	PRESENT WIRING		CHANGED WIRING	
		COLOR CODE	STATION	COLOR CODE	STATION
22	3	WH-GRN	31	WH-GRN	20
20	4	WH-BRN	31	WH-GRN	22
31	4	WH-GRN	22	REMOVED	
31	7	WH-BRN	20	REMOVED	

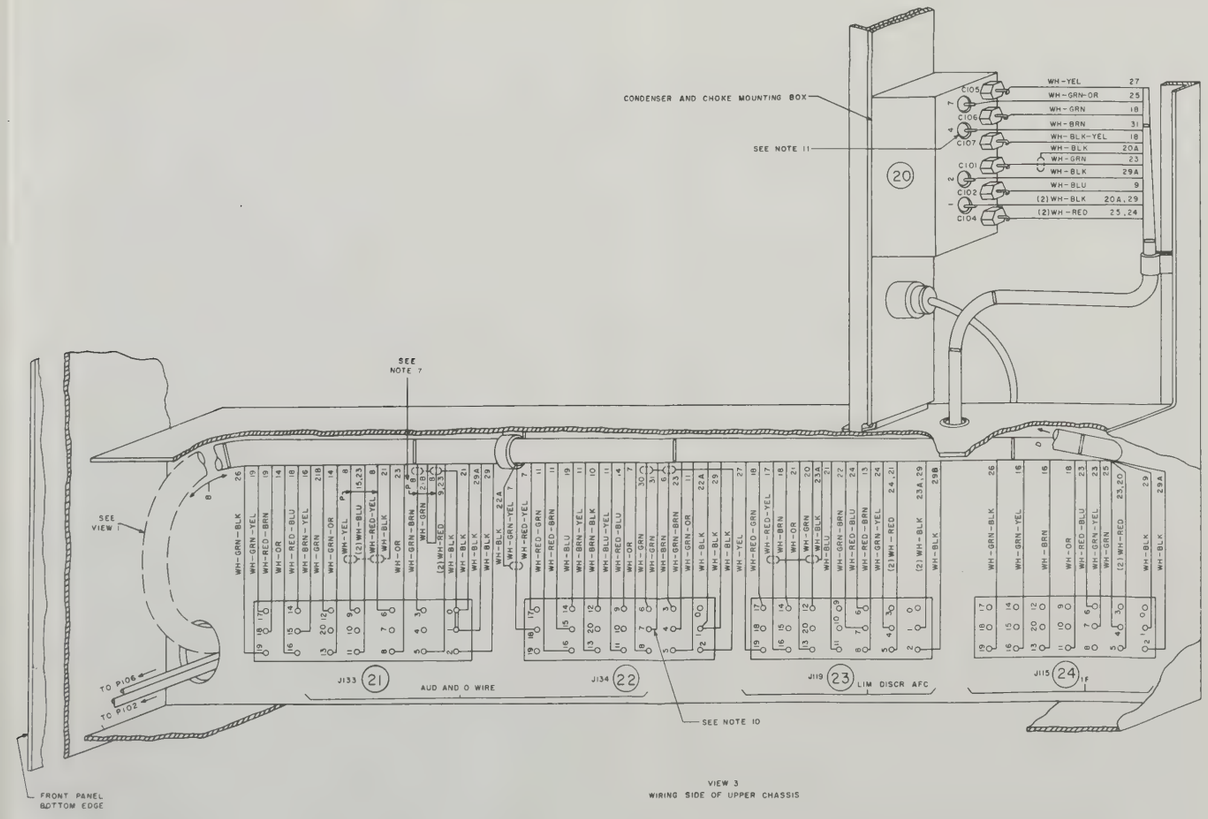

VIEW 3
WIRING SIDE OF UPPER CHASSIS

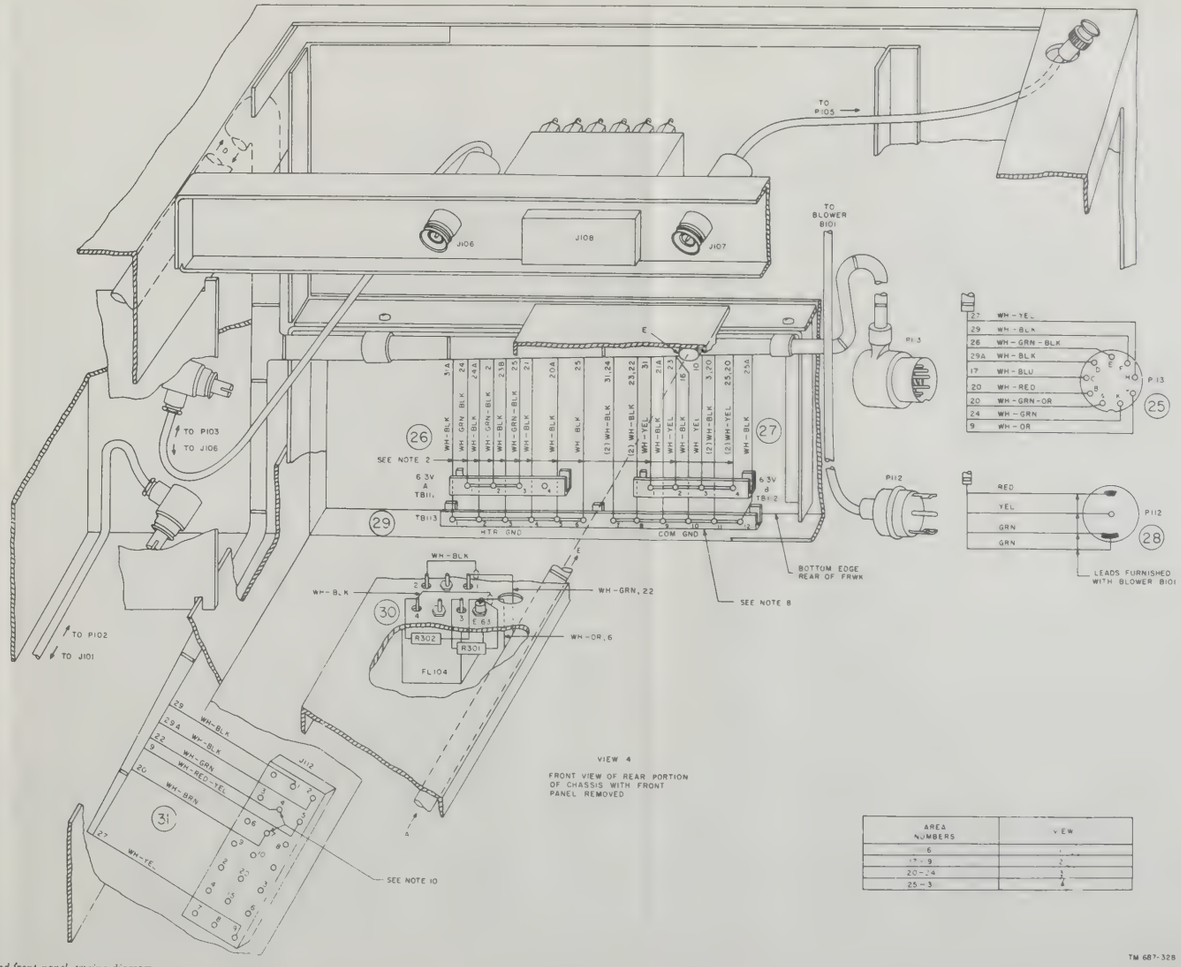

VIEW 4
FRONT VIEW OF REAR PORTION OF CHASSIS WITH FRONT PANEL REMOVED

AREA NUMBERS	VIEW
6	1
7 - 9	2
20 - 24	3
25 - 31	4

Figure 299. Receiver frame and front panel, wiring diagram.

381345 O - 58 (In pocket)

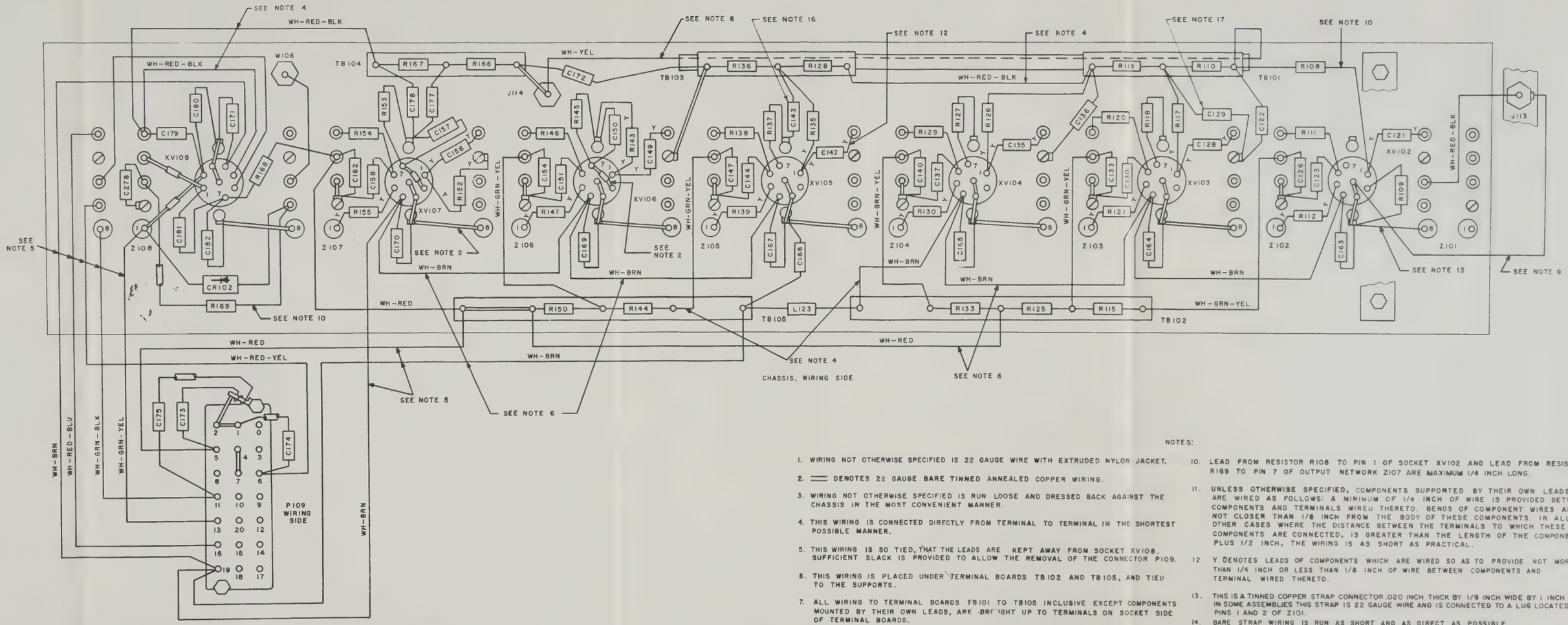

NOTES:

1. WIRING NOT OTHERWISE SPECIFIED IS 22 GAUGE WIRE WITH EXTRUDED NYLON JACKET.
2. ═══ DENOTES 22 GAUGE BARE TINNED ANNEALED COPPER WIRING.
3. WIRING NOT OTHERWISE SPECIFIED IS RUN LOOSE AND DRESSED BACK AGAINST THE CHASSIS IN THE MOST CONVENIENT MANNER.
4. THIS WIRING IS CONNECTED DIRECTLY FROM TERMINAL TO TERMINAL IN THE SHORTEST POSSIBLE MANNER.
5. THIS WIRING IS SO TIED, THAT THE LEADS ARE KEPT AWAY FROM SOCKET XV108. SUFFICIENT SLACK IS PROVIDED TO ALLOW THE REMOVAL OF THE CONNECTOR P109.
6. THIS WIRING IS PLACED UNDER TERMINAL BOARDS TB102 AND TB105, AND TIED TO THE SUPPORTS.
7. ALL WIRING TO TERMINAL BOARDS TB101 TO TB105 INCLUSIVE EXCEPT COMPONENTS MOUNTED BY THEIR OWN LEADS, ARE BROUGHT UP TO TERMINALS ON SOCKET SIDE OF TERMINAL BOARDS.
8. THIS WIRE IS RUN THROUGH BRASS TUBE FOR SHIELDING PURPOSES.
9. TAB OF TERMINAL HAS BEEN CUT TO SHORTEST LENGTH AND SOLDERED TO CENTER SLEEVE OF SOCKET XV102.
10. LEAD FROM RESISTOR R108 TO PIN 1 OF SOCKET XV102 AND LEAD FROM RESISTOR R169 TO PIN 7 OF OUTPUT NETWORK Z107 ARE MAXIMUM 1/4 INCH LONG.
11. UNLESS OTHERWISE SPECIFIED, COMPONENTS SUPPORTED BY THEIR OWN LEADS, ARE WIRED AS FOLLOWS: A MINIMUM OF 1/4 INCH OF WIRE IS PROVIDED BETWEEN COMPONENTS AND TERMINALS WIRED THERETO. BENDS OF COMPONENT WIRES ARE NOT CLOSER THAN 1/8 INCH FROM THE BODY OF THESE COMPONENTS. IN ALL OTHER CASES WHERE THE DISTANCE BETWEEN THE TERMINALS TO WHICH THESE COMPONENTS ARE CONNECTED, IS GREATER THAN THE LENGTH OF THE COMPONENT PLUS 1/2 INCH, THE WIRING IS AS SHORT AS PRACTICAL.
12. Y DENOTES LEADS OF COMPONENTS WHICH ARE WIRED SO AS TO PROVIDE NOT MORE THAN 1/4 INCH OR LESS THAN 1/8 INCH OF WIRE BETWEEN COMPONENTS AND TERMINAL WIRED THERETO.
13. THIS IS A TINNED COPPER STRAP CONNECTOR .020 INCH THICK BY 1/8 INCH WIDE BY 1 INCH LONG. IN SOME ASSEMBLIES THIS STRAP IS 22 GAUGE WIRE AND IS CONNECTED TO A LUG LOCATED BETWEEN PINS 1 AND 2 OF Z101.
14. BARE STRAP WIRING IS RUN AS SHORT AND AS DIRECT AS POSSIBLE.
15. ▭ DENOTES IMPREGNATED FIBRE GLASS SLEEVING.
16. IN SOME ASSEMBLIES C143 SHUNTS R136.
17. IN SOME ASSEMBLIES C129 IS GROUNDED AT THE SAME LUG AS R118.

TM 687-330

Figure 302. Receiver if. amplifier plug-in assembly, wiring diagram.

381345 O - 56 (In pocket)

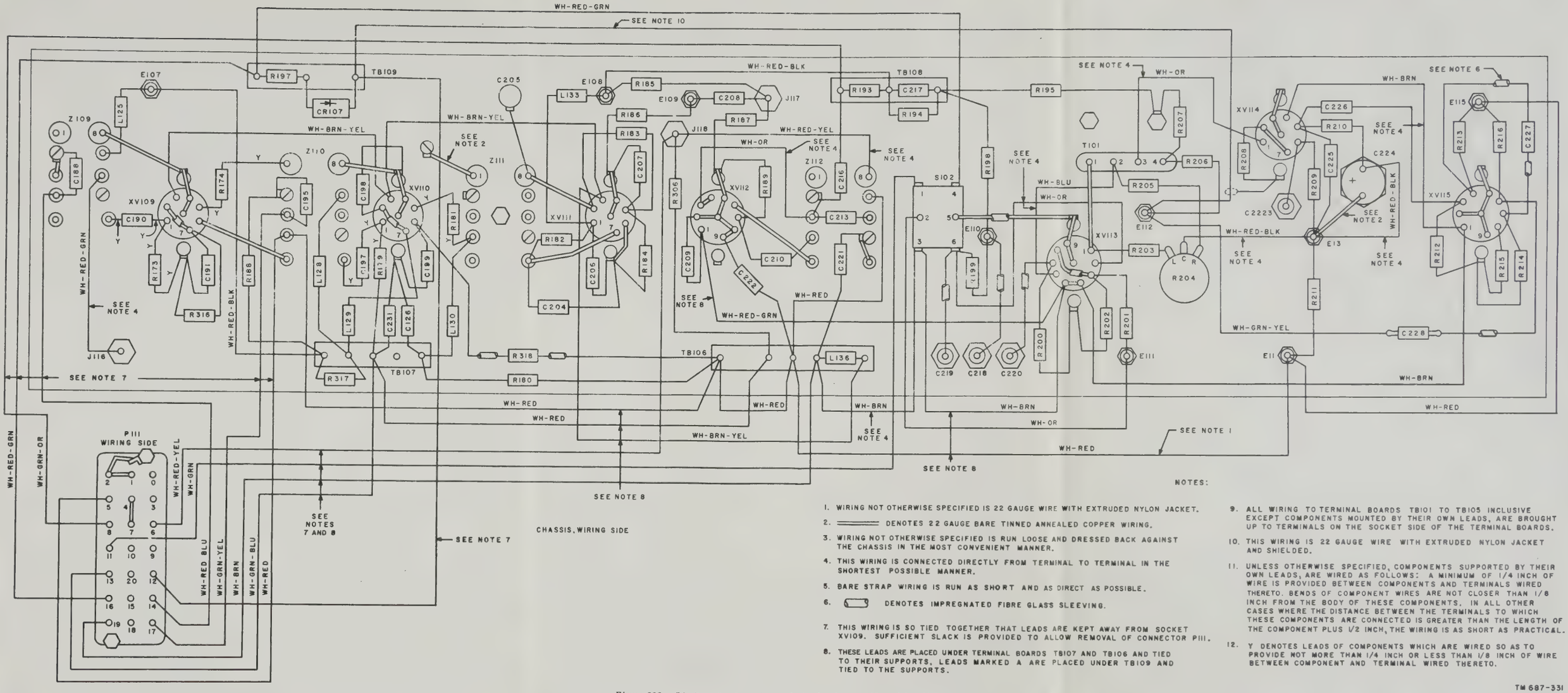

NOTES:

1. WIRING NOT OTHERWISE SPECIFIED IS 22 GAUGE WIRE WITH EXTRUDED NYLON JACKET.
2. ═══ DENOTES 22 GAUGE BARE TINNED ANNEALED COPPER WIRING.
3. WIRING NOT OTHERWISE SPECIFIED IS RUN LOOSE AND DRESSED BACK AGAINST THE CHASSIS IN THE MOST CONVENIENT MANNER.
4. THIS WIRING IS CONNECTED DIRECTLY FROM TERMINAL TO TERMINAL IN THE SHORTEST POSSIBLE MANNER.
5. BARE STRAP WIRING IS RUN AS SHORT AND AS DIRECT AS POSSIBLE.
6. ⬭ DENOTES IMPREGNATED FIBRE GLASS SLEEVING.
7. THIS WIRING IS SO TIED TOGETHER THAT LEADS ARE KEPT AWAY FROM SOCKET XV109. SUFFICIENT SLACK IS PROVIDED TO ALLOW REMOVAL OF CONNECTOR P111.
8. THESE LEADS ARE PLACED UNDER TERMINAL BOARDS TB107 AND TB106 AND TIED TO THEIR SUPPORTS. LEADS MARKED A ARE PLACED UNDER TB109 AND TIED TO THE SUPPORTS.
9. ALL WIRING TO TERMINAL BOARDS TB101 TO TB105 INCLUSIVE EXCEPT COMPONENTS MOUNTED BY THEIR OWN LEADS, ARE BROUGHT UP TO TERMINALS ON THE SOCKET SIDE OF THE TERMINAL BOARDS.
10. THIS WIRING IS 22 GAUGE WIRE WITH EXTRUDED NYLON JACKET AND SHIELDED.
11. UNLESS OTHERWISE SPECIFIED, COMPONENTS SUPPORTED BY THEIR OWN LEADS, ARE WIRED AS FOLLOWS: A MINIMUM OF 1/4 INCH OF WIRE IS PROVIDED BETWEEN COMPONENTS AND TERMINALS WIRED THERETO. BENDS OF COMPONENT WIRES ARE NOT CLOSER THAN 1/8 INCH FROM THE BODY OF THESE COMPONENTS. IN ALL OTHER CASES WHERE THE DISTANCE BETWEEN THE TERMINALS TO WHICH THESE COMPONENTS ARE CONNECTED IS GREATER THAN THE LENGTH OF THE COMPONENT PLUS 1/2 INCH, THE WIRING IS AS SHORT AS PRACTICAL.
12. Y DENOTES LEADS OF COMPONENTS WHICH ARE WIRED SO AS TO PROVIDE NOT MORE THAN 1/4 INCH OR LESS THAN 1/8 INCH OF WIRE BETWEEN COMPONENT AND TERMINAL WIRED THERETO.

Figure 303. Limiter, discriminator, and afc plug-in assembly, wiring diagram.

TM 687-331

381345 O - 56 (In pocket)

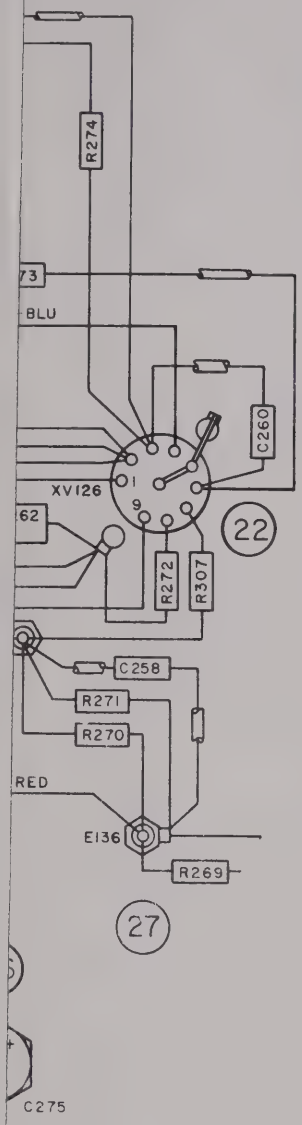

NOTES:

1. WIRING NOT OTHERWISE SPECIFIED IS 22 GAUGE WIRE WITH EXTRUDED NYLON JACKET.
2. ═══ DENOTES 20 GAUGE BARE TINNED ANNEALED COPPER WIRING.
3. BARE STRAP WIRING IS RUN AS SHORT AND AS DIRECT AS POSSIBLE.
4. WIRING NOT OTHERWISE SPECIFIED IS RUN LOOSE AND DRESSED BACK AGAINST THE CHASSIS IN THE MOST CONVENIENT MANNER.
5. ⊂═⊃ DENOTES IMPREGNATED FIBRE GLASS SLEEVING.
6. THIS WIRING IS CONNECTED DIRECTLY FROM TERMINAL TO TERMINAL IN THE SHORTEST POSSIBLE MANNER.
7. P DENOTES PAIRED LEADS WHICH ARE TWISTED APPROXIMATELY 6 TURNS PER FOOT.
8. INNER CONDUCTOR OF COAXIAL CABLE W107.

AREA NUMBERS	LOCATION
1 - 7	VIEW 1
12 - 29	VIEW 2

9. RELAY CONTACTS AT K102 ARE CHANGED AS SHOWN IN FIGURE 189 FOR BASE-BAND AMPLIFIER ASSEMBLIES ON ORDER NO. 16811-PHILA-51 (SERIAL NUMBERS 1 THROUGH 64) AND FOR ORDER NO. 32146-PHILA-51).

WH-BLK-RED

VIEW 1

WIRING SIDE OF CHASSIS, LEFT PORTION

VIEW 2

WIRING SIDE OF CHASSIS, RIGHT PORTION

Figure 304. Receiver base-band amplifier and order wire plug-in assembly, wiring diagram for types 1 and 2 procured on Order No. 16811-Phila-51

NOTES

1. WIRING NOT OTHERWISE SPECIFIED IS 22 GAUGE WIRE WITH EXTRUDED NYLON JACKET
2. ═══ DENOTES 20 GAUGE BARE TINNED ANNEALED COPPER WIRING
3. BARE STRAP WIRING IS RUN AS SHORT AND AS DIRECT AS POSSIBLE
4. WIRING NOT OTHERWISE SPECIFIED IS RUN LOOSE AND DRESSED BACK AGAINST THE CHASSIS IN THE MOST CONVENIENT MANNER
5. ⊂⊃ DENOTES IMPREGNATED FIBRE GLASS SLEEVING
6. THIS WIRING IS CONNECTED DIRECTLY FROM TERMINAL TO TERMINAL IN THE SHORTEST POSSIBLE MANNER
7. P DENOTES PAIRED LEADS WHICH ARE TWISTED APPROXIMATELY 6 TURNS PER FOOT
8. INNER CONDUCTOR OF COAXIAL CABLE W107.

AREA NUMBERS	LOCATION
1-7	VIEW 1
12-29	VIEW 2

9. RELAY CONTACTS AT K102 ARE CHANGED AS SHOWN IN FIGURE 189 FOR BASE-BAND AMPLIFIER ASSEMBLIES ON ORDER NO 16811-PHILA-51 (SERIAL NUMBERS 1 THROUGH 64) AND FOR ORDER NO 32146-PHILA-51).

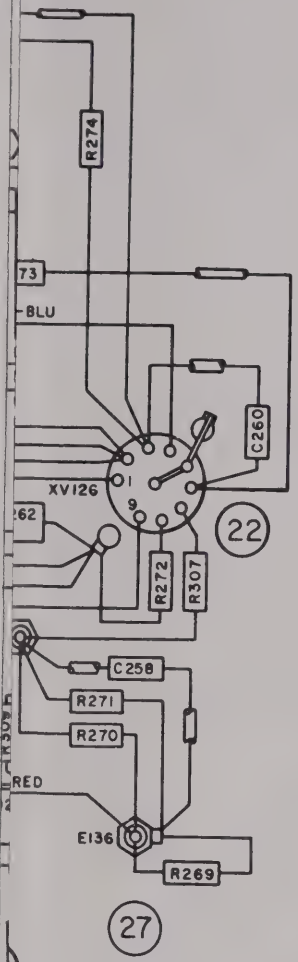

NOTES:

1. WIRING NOT OTHERWISE SPECIFIED IS 22 GAUGE WIRE WITH EXTRUDED NYLON JACKET.
2. ═══ DENOTES 20 GAUGE BARE TINNED ANNEALED COPPER WIRING.
3. BARE STRAP WIRING IS RUN AS SHORT AND AS DIRECT AS POSSIBLE.
4. WIRING NOT OTHERWISE SPECIFIED IS RUN LOOSE AND DRESSED BACK AGAINST THE CHASSIS IN THE MOST CONVENIENT MANNER.
5. ⬭ DENOTES IMPREGNATED FIBRE GLASS SLEEVING.
6. THIS WIRING IS CONNECTED DIRECTLY FROM TERMINAL TO TERMINAL IN THE SHORTEST POSSIBLE MANNER.
7. P DENOTES PAIRED LEADS WHICH ARE TWISTED APPROXIMATELY 6 TURNS PER FOOT.
8. INNER CONDUCTOR OF COAXIAL CABLE W107.

AREA NUMBERS	LOCATION
1 - 7	VIEW 1
12 - 29	VIEW 2

VIEW 1
WIRING SIDE OF CHASSIS, LEFT PORTION

VIEW 2
WIRING SIDE OF CHASSIS, RIGHT PORTION

NOTES

1. WIRING NOT OTHERWISE SPECIFIED IS 22 GAUGE WIRE WITH EXTRUDED NYLON JACKET
2. ═══ DENOTES 20 GAUGE BARE TINNED ANNEALED COPPER WIRING
3. BARE STRAP WIRING IS RUN AS SHORT AND AS DIRECT AS POSSIBLE
4. WIRING NOT OTHERWISE SPECIFIED IS RUN LOOSE AND DRESSED BACK AGAINST THE CHASSIS IN THE MOST CONVENIENT MANNER
5. ⊂⊃ DENOTES IMPREGNATED FIBRE GLASS SLEEVING
6. THIS WIRING IS CONNECTED DIRECTLY FROM TERMINAL TO TERMINAL IN THE SHORTEST OSSIBLE MANNER
7. P DENOTES PAIRED LEADS WHICH ARE TWISTED APPROXIMATELY 6 TURNS PER FOOT
8. INNER CONDUCTOR OF COAXIAL CABLE W107.

AREA NUMBERS	LOCATION
1 - 7	VIEW 1
12 - 29	VIEW 2

Figure 305. Receiver base-band amplifier and order-wire plug-in assembly, wiring diagram for types 1 through 8 procured on Order No. 16811–Phila–51.

381345 O - 56 (In pocket)

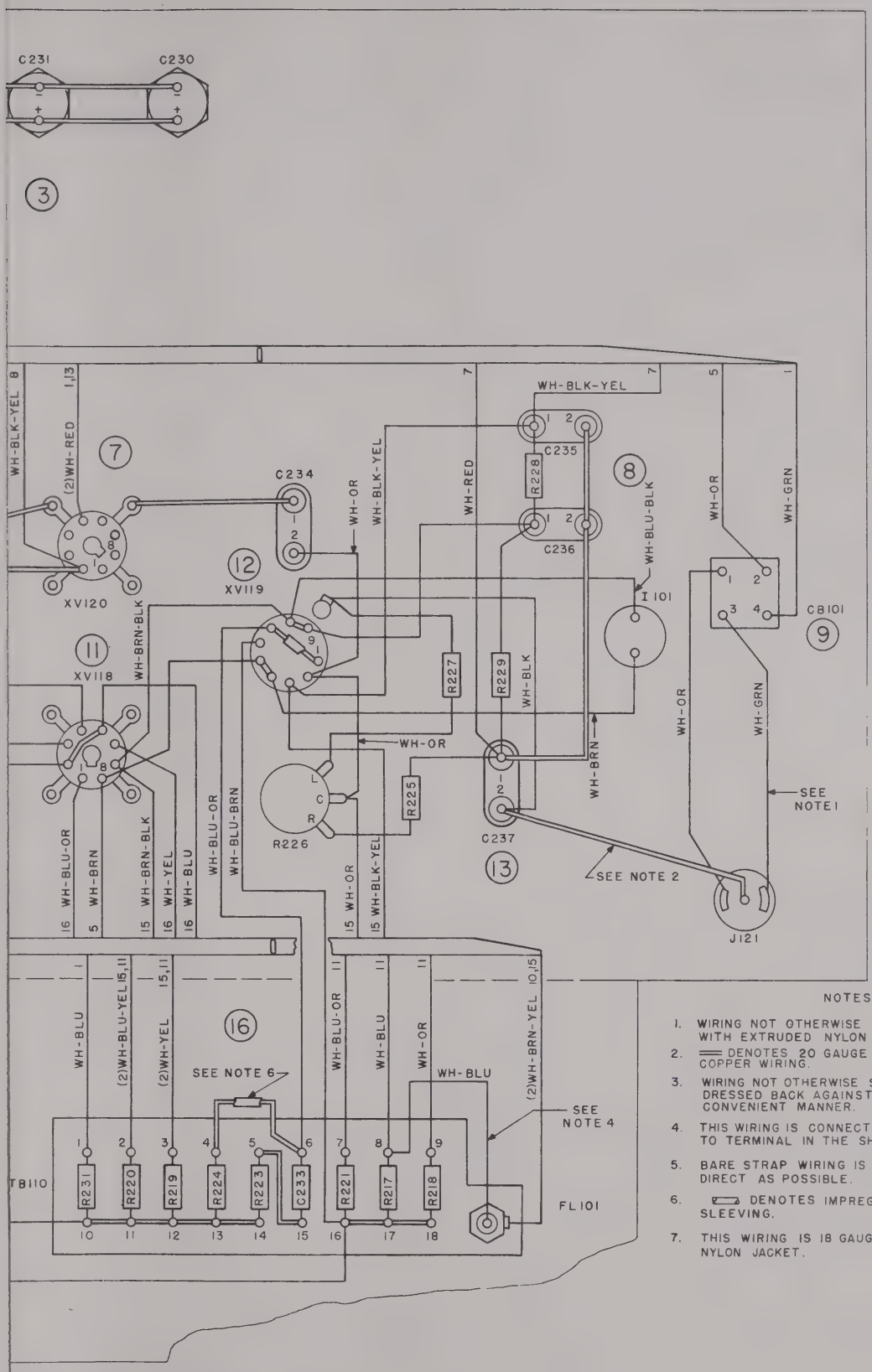

NOTES:

1. WIRING NOT OTHERWISE SPECIFIED IS 22 GAUGE WIRE WITH EXTRUDED NYLON JACKET.
2. ═══ DENOTES 20 GAUGE BARE TINNED ANNEALED COPPER WIRING.
3. WIRING NOT OTHERWISE SPECIFIED IS RUN LOOSE AND DRESSED BACK AGAINST THE CHASSIS IN THE MOST CONVENIENT MANNER.
4. THIS WIRING IS CONNECTED DIRECTLY FROM TERMINAL TO TERMINAL IN THE SHORTEST POSSIBLE MANNER.
5. BARE STRAP WIRING IS RUN AS SHORT AND AS DIRECT AS POSSIBLE.
6. ▭ DENOTES IMPREGNATED FIBRE GLASS SLEEVING.
7. THIS WIRING IS 18 GAUGE WIRE WITH EXTRUDED NYLON JACKET.

TM 687-333

plug-in assembly, wiring diagram.

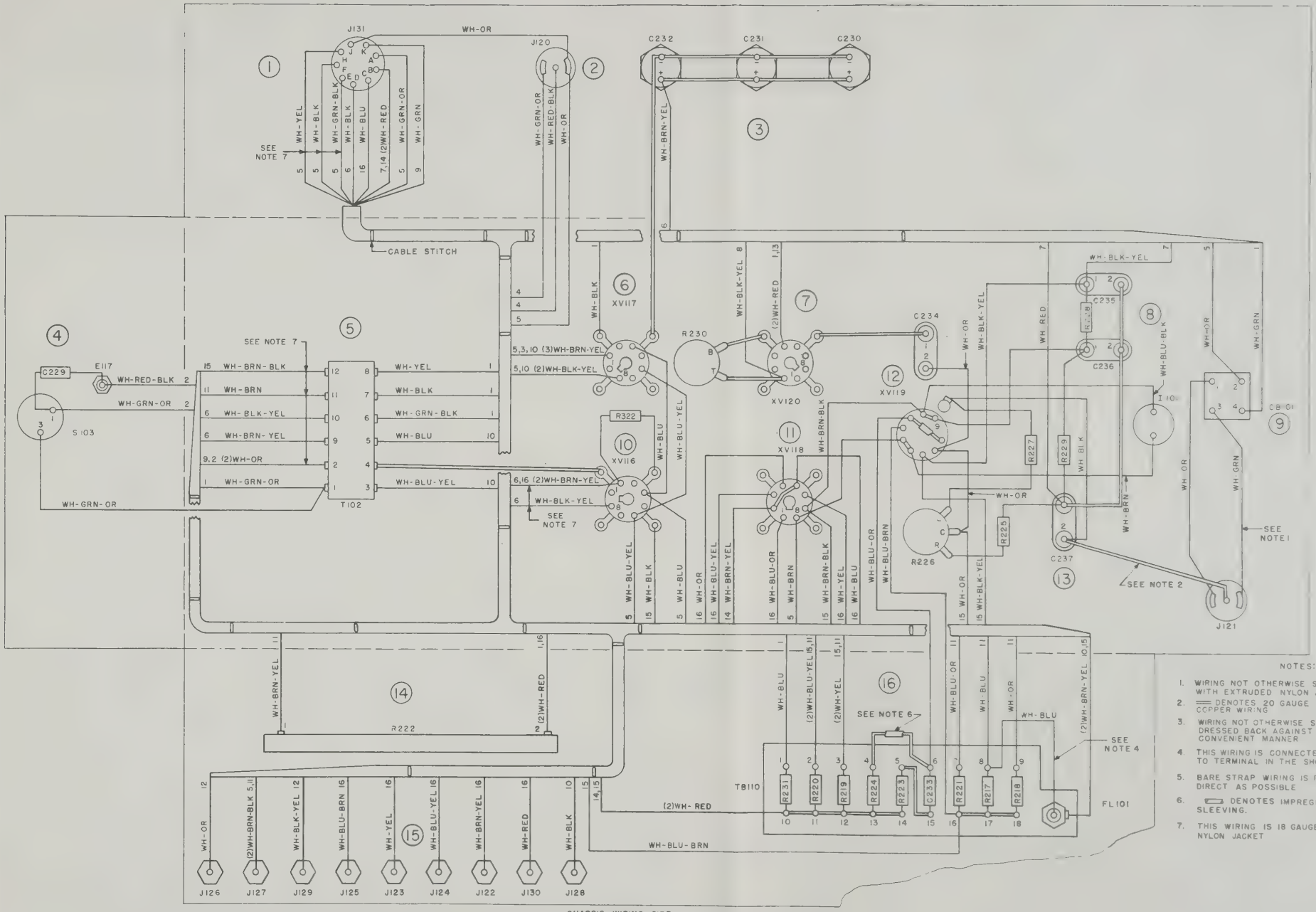

NOTES:

1. WIRING NOT OTHERWISE SPECIFIED IS 22 GAUGE WIRE WITH EXTRUDED NYLON JACKET.
2. ═══ DENOTES 20 GAUGE BARE TINNED ANNEALED COPPER WIRING.
3. WIRING NOT OTHERWISE SPECIFIED IS RUN LOOSE AND DRESSED BACK AGAINST THE CHASSIS IN THE MOST CONVENIENT MANNER.
4. THIS WIRING IS CONNECTED DIRECTLY FROM TERMINAL TO TERMINAL IN THE SHORTEST POSSIBLE MANNER.
5. BARE STRAP WIRING IS RUN AS SHORT AND AS DIRECT AS POSSIBLE.
6. ▭ DENOTES IMPREGNATED FIBRE GLASS SLEEVING.
7. THIS WIRING IS 18 GAUGE WIRE WITH EXTRUDED NYLON JACKET.

Figure 306. Receiver power-supply plug-in assembly, wiring diagram.

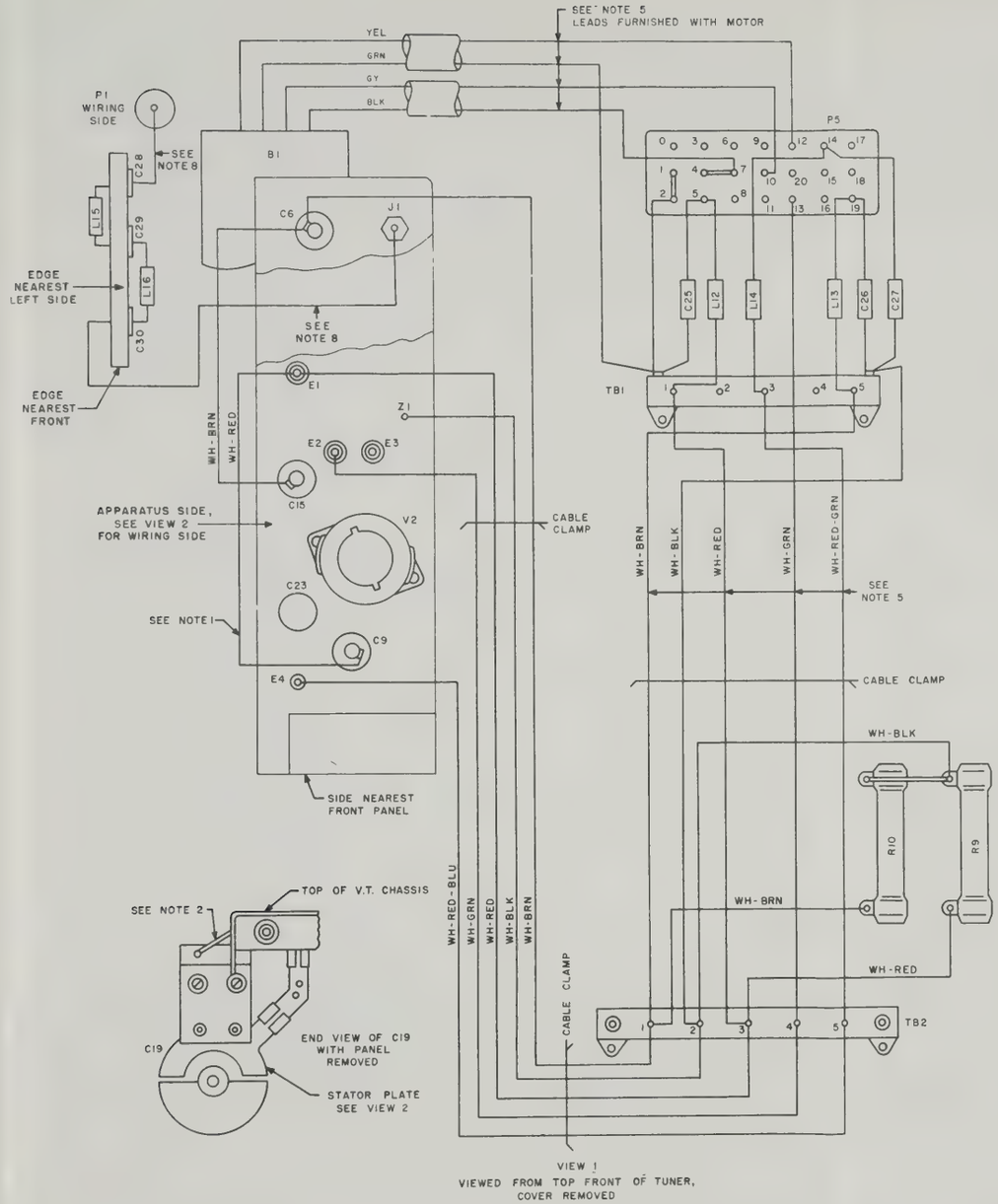

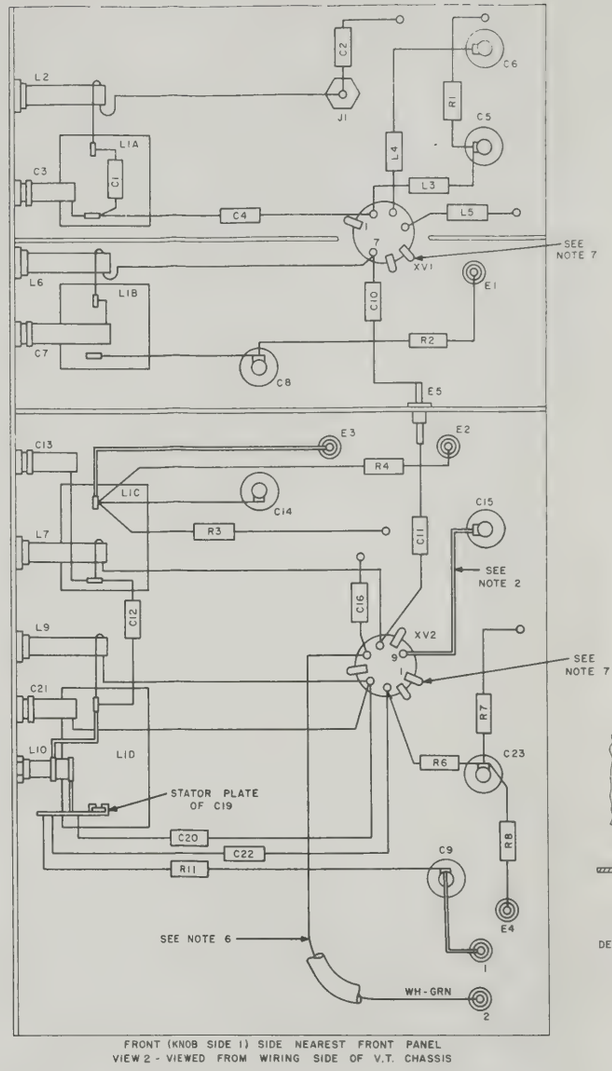

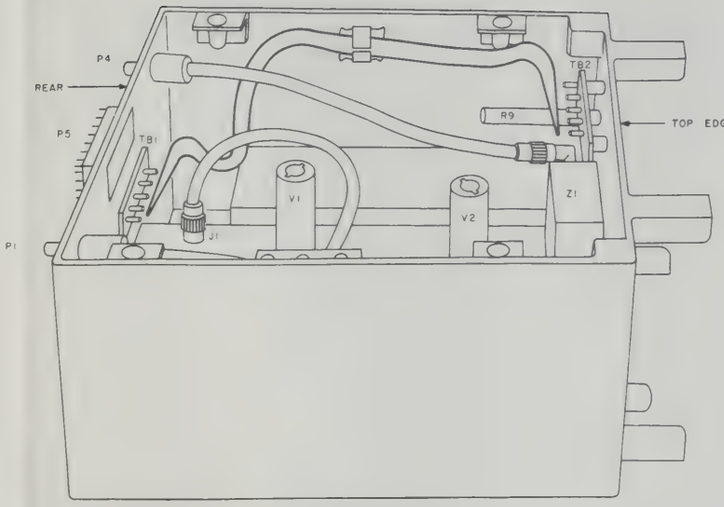

AMPLIFIER-CONVERTER AM-913/TRC VIEWED FROM LEFT SIDE

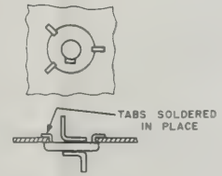

DETAILS OF C6, C5, C15, C23, C9, C28, C29, C30
METHOD OF MOUNTING

NOTES:

1. WIRING NOT OTHERWISE SPECIFIED IS 22 GAUGE WIRE WITH EXTRUDED NYLON JACKET
2. ═══ DENOTES 20 GAUGE BARE TINNED ANNEALED COPPER WIRING.
3. WIRING NOT OTHERWISE SPECIFIED IS RUN LOOSE AND DRESSED BACK AGAINST THE CHASSIS IN THE MOST CONVENIENT MANNER
4. BARE STRAP WIRING IS RUN AS SHORT AND AS DIRECT AS POSSIBLE.
5. THIS WIRING IS RUN IN A CABLE FORM.
6. THIS WIRE IS RUN THROUGH BRASS TUBING.
7. TERMINALS ARE BENT OVER AND SOLDERED FLAT AGAINST THE CHASSIS.
8. THIS WIRING IS 36 GAUGE COAXIAL CABLE.

TM 687-334

Figure 307. Amplifier-Converter AM-913/TRC, wiring diagram.

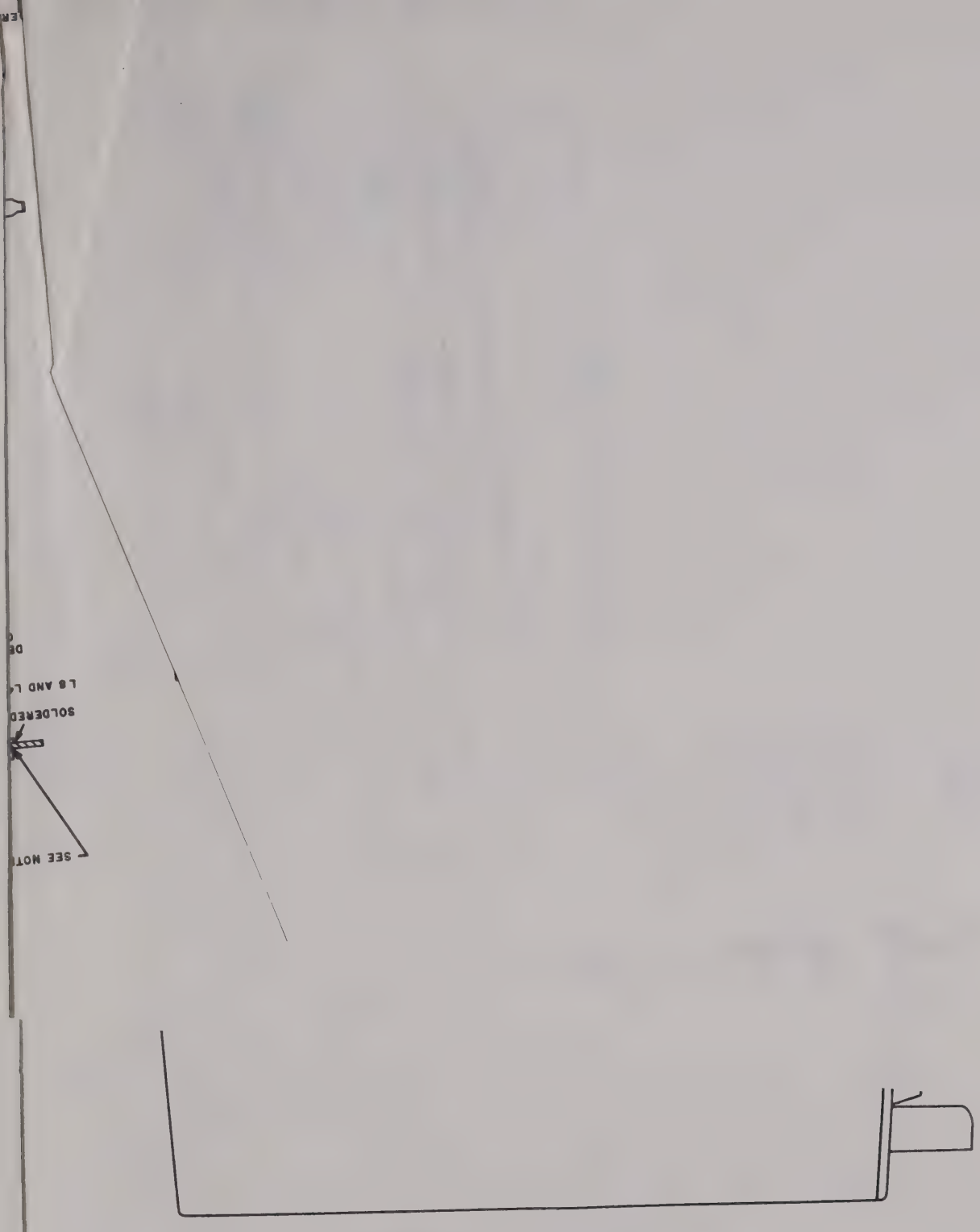

AMPLIFIER - CONVERTER AM - 914/TRC VIEWED FROM LEFT SIDE

NOTES:

1. WIRING NOT OTHERWISE SPECIFIED IS 22 GAUGE WIRE WITH EXTRUDED NYLON JACKET.
2. ═══ DENOTES 20 GAUGE BARE TINNED ANNEALED COPPER WIRING.
3. BARE STRAP WIRING IS RUN AS SHORT AND AS DIRECT AS POSSIBLE.
4. WIRING NOT OTHERWISE SPECIFIED IS RUN LOOSE AND DRESSED BACK AGAINST THE CHASSIS IN THE MOST CONVENIENT MANNER.
5. ▭ DENOTES IMPREGNATED FIBRE GLASS SLEEVING.
6. THESE TERMINALS ARE BENT OVER AND SOLDERED FLAT AGAINST THE CHASSIS.
7. ALL LEADS TO SOCKET XV4 ARE SOLDERED AS CLOSE TO BOTTOM OF TERMINAL AS POSSIBLE.
8. THESE LEADS ARE IN CABLE FORM.
9. SOLDERED ON THE CIRCUMFERENCE AT 4 POINTS APPROXIMATELY EQUALLY SPACED.

TM 667-338

AM-914/TRC, wiring diagram.

381345 O - 56 (In pocket)

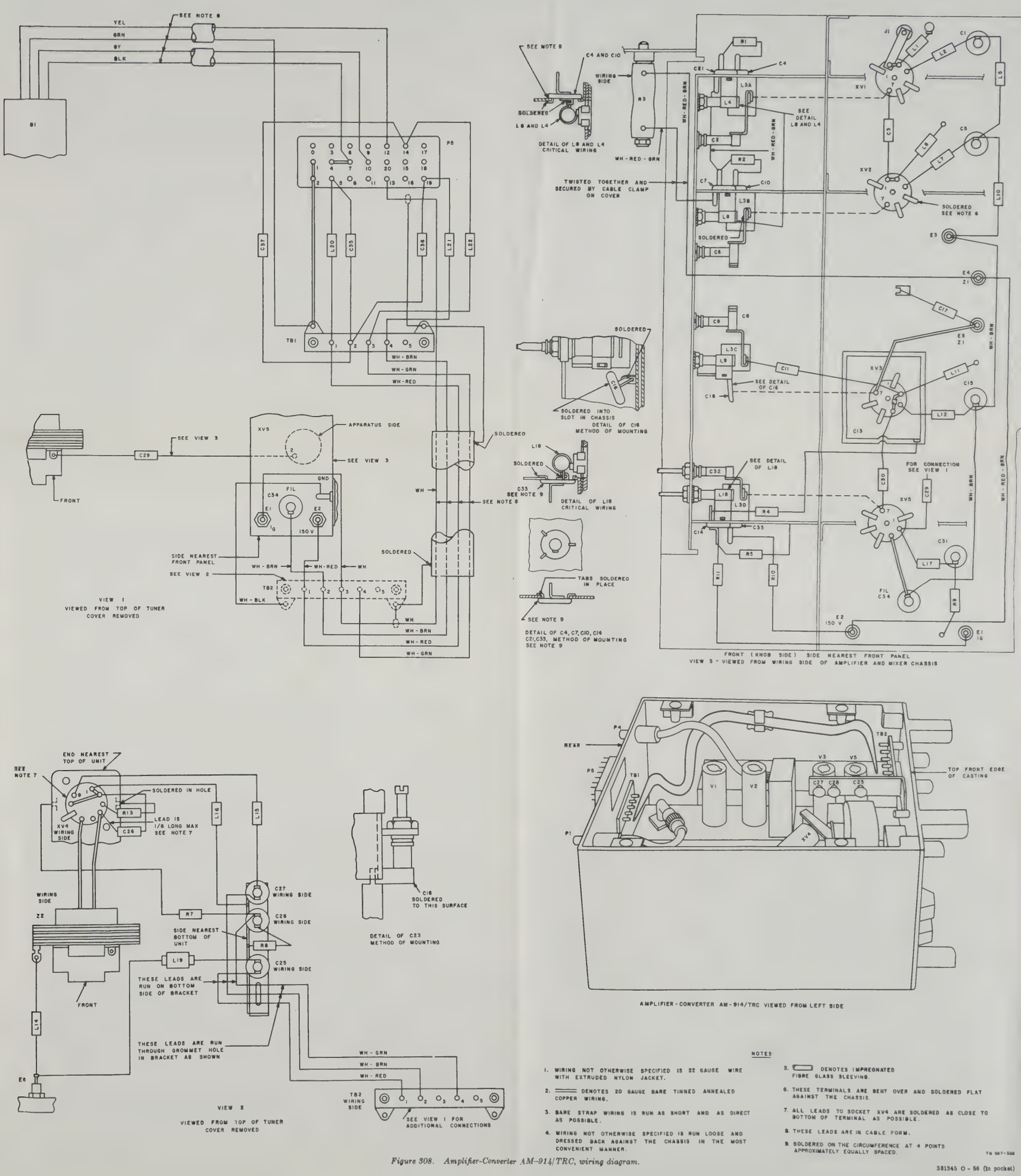

NOTES:

1. WIRING NOT OTHERWISE SPECIFIED IS 22 GAUGE WIRE WITH EXTRUDED NYLON JACKET.
2. ═══ DENOTES 20 GAUGE BARE TINNED ANNEALED COPPER WIRING.
3. BARE STRAP WIRING IS RUN AS SHORT AND AS DIRECT AS POSSIBLE.
4. WIRING NOT OTHERWISE SPECIFIED IS RUN LOOSE AND DRESSED BACK AGAINST THE CHASSIS IN THE MOST CONVENIENT MANNER.
5. ▭ DENOTES IMPREGNATED FIBRE GLASS SLEEVING.
6. THESE TERMINALS ARE BENT OVER AND SOLDERED FLAT AGAINST THE CHASSIS.
7. ALL LEADS TO SOCKET XV4 ARE SOLDERED AS CLOSE TO BOTTOM OF TERMINAL AS POSSIBLE.
8. THESE LEADS ARE IN CABLE FORM.
9. SOLDERED ON THE CIRCUMFERENCE AT 4 POINTS APPROXIMATELY EQUALLY SPACED.

TM 667-336

Figure 308. Amplifier-Converter AM-914/TRC, wiring diagram.

381345 O - 56 (In pocket)

WARNING

EXTREMELY DANGEROUS VOLTAGES EXIST IN THE FOLLOWING UNITS:

Radio Transmitter T–302/TRC	700-volt circuits
Power Supply PP–685/TRC	700-volt circuits

DEPARTMENT OF THE ARMY TECHNICAL MANUAL
DEPARTMENT OF THE AIR FORCE TECHNICAL ORDER

RADIO SET AN/TRC-24, RADIO TERMINAL SET AN/TRC-35, AND RADIO RELAY SET AN/TRC-36

TM 11-687
TO 31R2-2TRC24-11
CHANGES No. 1

DEPARTMENTS OF THE ARMY
AND THE AIR FORCE
WASHINGTON 25, D. C., *23 May 1956*

TM 11-687/TO31R2-2TRC24-11, 14 September 1955, is changed as follows:

The following information changes TM 11-687/TO 31R2-2TRC24-11 so that the manual also applies to the following equipments.

Nomenclature	*Order No.*	*Serial No.*
Radio Set AN/TRC-24	08720-Phila-55	1 through 1670.
Radio Terminal Set AN/TRC-35.	32146-Phila-51	
and		
Radio Relay Set AN/TRC-36.	----------	

Note. Radio sets procured on Orders No. 08720-Phila-55 and 32146-Phila-51 are similar to Radio Set AN/TRC-24, Radio Terminal Set AN/TRC-35, and Radio Relay Set AN/TRC-36 covered in the manual. Information in the technical manual applies to all Radio Sets AN/TRC-24, Radio Terminal Sets AN/TRC-35 and Radio Relay Sets AN/TRC-36 unless otherwise specified.

Page 13, paragraph 7*c*. Add the following after "Screwdriver TL-458/U": Screwdriver TL-360/U (Order No. 32146-Phila-51).

Page 14, paragraph 7*c*. Make the following changes:

Notes.

1. (Added) On Order No. 32146-Phila-51, the Electrical Power Cable Assemblies CX-2254/U (10 ft) are packed in crate No. 17 instead of crate No. 18.

Change the existing note to **2.**

3. (Added) On Order No. 32146-Phila-51, Radio Frequency Cable Assembly CG-798A/U is used in place of Radio Frequency Cable Assembly CG-789/U.

Page 15, paragraph 8. Make the following additions in the "Component" column:

Line 4. After "Radio Transmitter T-302/TRC" add: supplied on Order No. 16811-Phila-51. Radio Transmitter T-302A/TRC supplied on Order No. 32146-Phila-51.

Line 5. After "Radio Receiver R-417/TRC" add: supplied on Order No. 16811-Phila-51. Radio Receiver R-417A/TRC supplied on Order No. 32146-Phila-51.

Line 6. After "Power Supply PP-685/TRC" add: supplied on Order No. 16811-Phila-51. Power Supply PP-685A/TRC supplied on Order No. 32146-Phila-51.

Line 4, right hand column. After "Radio Frequency Amplifier AM-912/TRC" add: supplied on Order No. 16811-Phila-51. Radio Frequency Amplifier AM-912A/TRC supplied on Order No. 32146-Phila-51.

Line 6, right hand column. After "Radio Frequency Amplifier-Multiplier AM-915/TRC" add: supplied on Order No. 16811-Phila-51. Radio Frequency Amplifier-Multiplier AM-915A/TRC supplied on Order No. 32146-Phila-51.

Page 16, paragraph 9*a*(2), line 4. Change "(figs. 7 and 8)" to read: **(figs. 7, 8, and 9)**.

Page 24, figure 13.

NOTE. (Added) ON ORDER NO. 32146-PHILA-51, THE POWER CABLE ADAPTER IS REVERSED ON POWER SUPPLY PP-685A/TRC.

Page 37, figure 29.

NOTE. (Added) ON ORDER NO. 32146-PHILA-51, SCREWDRIVER TL-360/U IS SUPPLIED IN PLACE OF SCREWDRIVER TL-458/U.

Page 38, paragraph 24*k*. Make the following changes:

Add the following to the heading: **(fig. 30)**.

Change the second sentence in (5) to read: **It is used to extend if connection from the receiver jack J107 to the rf tuners plug P4 to permit their operation after removal from the receiver.**

Change the second sentence in (6) to read: **It is used to extend the rf connection from the receiver jack J106 to the receiver rf tuners plug P1 to permit their**

TAGO 7074A—May 360475°—56——1

operation after removal from the receiver.

Add the following note at the end of (7):

Note. On Order No. 08720–Phila–55, Electrical Special Purpose Cable Assembly CX–2406/U is used to facilitate connections to the RECEIVER jack of the transmitter and to the TRANSMITTER jack of the receiver.

Page 39, figure 31.

NOTE. (Added) ON ORDER NO. 32146–PHILA–50, SCREWDRIVER TL–360/U IS SUPPLIED IN PLACE OF SCREWDRIVER TL–458/U.

Page 42, paragraph 30. After the last sentence, add: The latest type of assemblies is used on Order No. 08720–Phila–55.

In the chart, add the following after "Limiter discriminator-afc plug-in assembly:"

If. amplifier assembly----------	3	22

Make the following changes in the "types" column:

Adjacent to "Rf exciter plug-in assembly," change "4" to read: **5.**

Adjacent to "Afc unit (60-cps modulator) plug-in assembly," change "3" to read: **4.**

Adjacent to "Base-band amplifier and order wire plug-in assembly," change "8" to read: **9.**

Adjacent to "Limiter discriminator and afc plug-in assembly," change "5" to read: **6.**

Page 100, paragraph 68*d*(4), last line. Change "70*e*" to read: **70*f*.**

Page 105, paragraph 71*a*. Add after the table:

Note. On Order No. 32146–Phila–51, the first item in the cable chart is located in crate No. 17.

Page 106, paragraph 71*b*, last line. Change "(par. 65)" to read: (**par. 65*c*(5)**).

Page 127, paragraph 87*b*. In the "function" column, line 10, change "(fig. 230)" to read: (**fig. 232**).

Page 130, paragraph 94. Make the following changes:

f, heading. Change "*L*-kc" to read: **1-kc.**

m, line 1. Change "returning" to read: **Retuning.**

Page 136, paragraph 105. After the heading of *c*, add the following caution notice:

Caution: For equipment procured on Order No. 08720–Phila–55, perform this check as quickly as possible. The output tube of the tuner may be damaged if it is operated without a load for too long a time.

Page 137, paragraph 107*b*. Add the following to (5): On Order No. 08720–Phila–55, perform (5) through (15).

Page 155, paragraph 137. Make the following changes:

i, line 3. Change "154 and 337" to read: **154 and 336.**

j, line 2. Delete "(70*f*)".

Page 174, paragraph 145*a*, last line. Change "309 through 379" to read: **309 through 378.**

Page 187, paragraph 155, line 9. Change "170" to read: **172.**

Page 188, paragraph 158.

b. (Superseded) Swing up the top chassis and rotate the XTAL SEL knob on the front panel (fig. 187) until the shaft setscrews are visible through the hole in the bottom of the upper chassis.

162.1. Adjustment of Exciter Lock Mechanism of Radio Transmitters T–302/TRC (Order No. 08720–Phila–55)

(Added)

Following the replacement of the exciter or exciter shock mounts of transmitters manufactured on Order No. 08720–Phila–55, a minor mechanical adjustment can be made. To insure that the exciter is held as securely as possible by its locking mechanism, perform the following adjustments:

a. Install the exciter (fig. 7).

b. Remove the base-band amplifier from the transmitter (fig. 8).

c. Lower the upper chassis (fig. 7) and depress the vibration-mount lock control (fig. 6).

d. There are two holes in the upper chassis of the transmitters manufactured on Order No. 08720–Phila–55 (fig. 133.1) through which the slotted heads of two studs on the exciter protrude. Tighten these studs evenly so that there is as little motion of the exciter as possible when gently shaking the RF CHANNEL TUNE knob (fig. 87) and when moving the assembly upward from the side and the rear. Be sure that the studs are not tightened to the point where the lock mechanism jams (lock control cannot be pulled out or depressed).

Note. Only exciters manufactured on Order No. 08720–Phila–55 can be adjusted as described above, because rotating the studs of exciters on equipment procured on

other order numbers will not affect the locking of the exciters. The upper chassis of transmitters other than those procured on Order No. 08720–Phila–55 do not have holes; therefore, it is not possible to adjust the locking of the exciter. The exciters on equipment procured on Order No. 08720–Phila–55 can be readily distinguished from units procured on other order numbers, because the two screws on top of the assembly have spring washers.

Page 217, paragraph 215*a* (1). In the last two lines of (1), change "resistor R101.R104" to read: **resistor R110.**

Page 219, figure 140. In line 2 of the note, add the following at beginning of "note": **ON ORDER NO. 16811–PHILA–51.**

Add the following to the "note": ALL REACTANCE MODULATOR CIRCUITS ON ORDER NO. 08720–PHILA–55 ARE OF THE LATER TYPE. THIS CHANGE IS EFFECTIVE ON ORDER NO. 32146–PHILA–51 WITH SERIAL NO. 1400.

Page 224, paragraph 220. Make the following changes in *b*:

In the last sentence, delete "bearing serial numbers 1 through 1847."

After the last line, add the following: **and all sets on Order No. 08720–Phila–55.**

Page 226, figure 144. Change "note 4", to read:

R172 IS 100 OHMS IN SOME EXCITERS ON ORDER NO. 16811–PHILA–51, **IN EXCITERS OF SETS WITH SERIAL NUMBERS 1 THROUGH 1847** ON ORDER NO. 32146–PHILA–51, **AND IN EXCITERS OF ALL SETS ON ORDER NO. 08720–PHILA–55.**

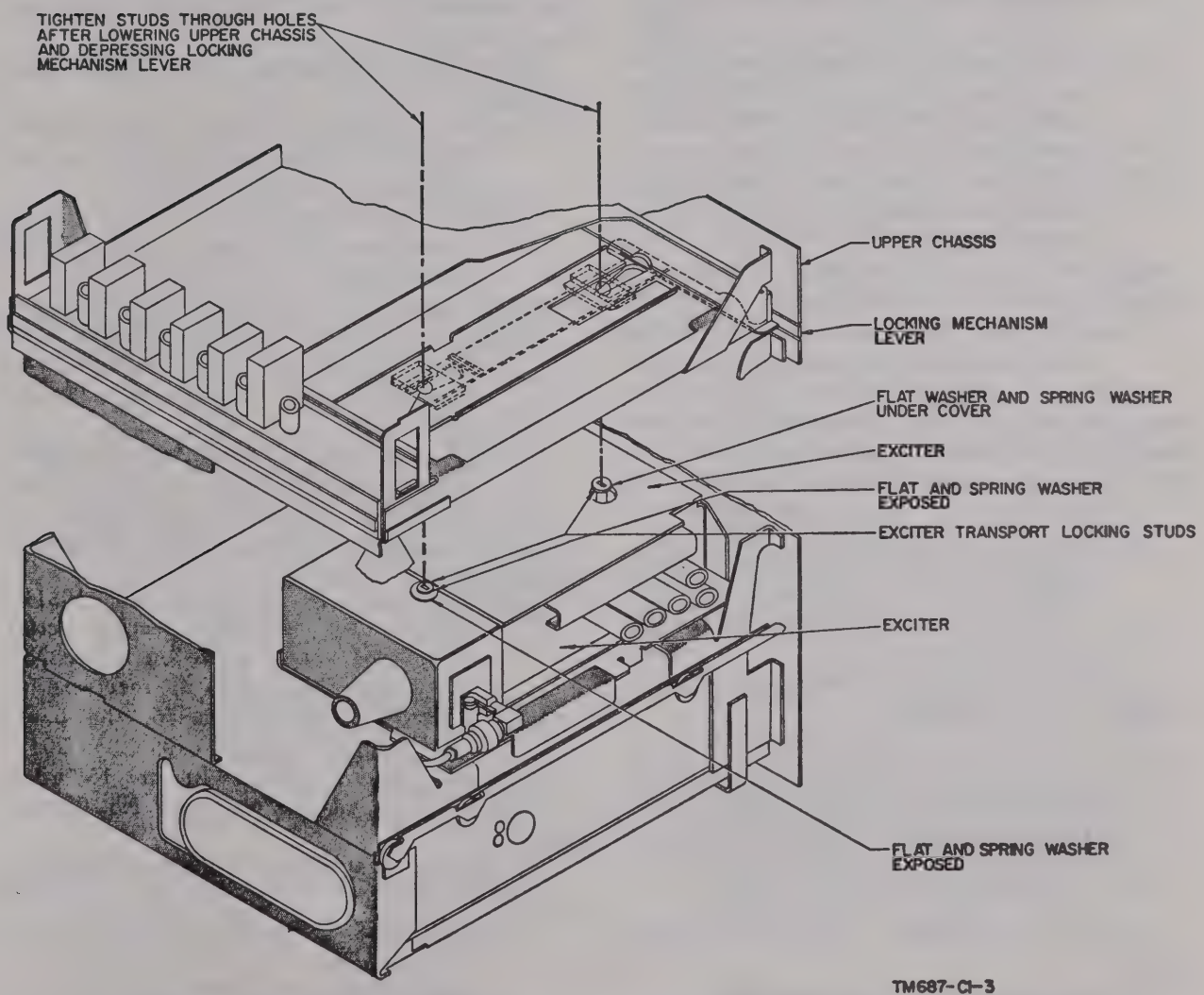

Figure 133.1. (Added) *Locking mechanism of upper transmitter chassis on Order No. 08720–Phila–55.*

Page 249, figure 160. Make the following changes:

Change "R130" in existing "note" to read: **R310.**

Add the following to the note: IN ALL 2D AFC LIMITER CIRCUITS ON ORDER NO. 08720–PHILA–55, R310 IS 3,300 OHMS.

Page 249, paragraph 238*b*. Add the following:

Resistor R310 is 3,300 ohms in all afc limiter circuits of Order No. 08720–Phila–55.

Pages 255, 256, 258, and 259. Change "note 3" of figure 164, "note 3" of figure 165, "note 5" of figure 167, and "note 7" of figure 168, to read as follows:

IN THE METERING CIRCUIT OF SOME TRANSMITTERS SUPPLIED ON ORDER NO. 16811–PHILA–51, THE METERING CIRCUIT OF TRANSMITTERS BEARING SERIAL NUMBERS 230 AND ABOVE ON ORDER NO. 32146–PHILA–51, AND IN THE METERING CIRCUIT OF TRANSMITTERS ON ORDER NO. 08720–PHILA–55, 180 $\mu\mu$F CAPACITOR C312 IS CONNECTED IN PARALLEL WITH CR101.

Page 266, paragraph 249*e*(2). Change the second sentence to read as follows:

Capacitor C310 compensates for the lagging power factor of the motor.

Page 268, paragraph 251*c*(1). Change the fourth sentence to read: **These items are also included in all power supplies on Order No. 32146–Phila–51 and on Order No. 08720–Phila–55.**

Page 271, figure 172. Change "note 2" to read:

2. C16 AND R34 USED ON ORDER NO. 16811–PHILA–51 (SERIAL NUMBERS 701 AND ABOVE), ORDER NO. 32146–PHILA–51, AND ORDER NO. 08720–PHILA–55.

Page 277, paragraph 272*a*. Change the second sentence to read as follows:

For sets on Order No. 16811–Phila–51 bearing serial numbers 201 and above, **and for all sets on Order No. 32146–Phila–51 and Order No. 08720–Phila–55, a** shield has been added around the low-pass filter to minimize radiation from the tuner.

Page 278, paragraph 274*a*. Make the following changes:

In line 7, change "L10" to read: **L1C.**

In line 22, change "C17" to read: **C31.**

Add the following immediately preceding the last sentence:

All sets on Order No. 08720–Phila–55 include these changes.

Page 281, paragraph 283*a*. Add the following: In some receiver if. amplifiers on Order No. 16811–Phila–51, and in all amplifiers on Order No. 08720–Phila–55, an rf filter has been added in the +150V lead to prevent high-level rf induced into the supply line from being coupled to the input stages and causing regeneration. This filter consists of choke L140 (14 mh) connected in the B+ lead between the junction of resistor R125 and R133, and the junction of capacitor C173 and the B+ lead; and capacitor C296 (4,700 $\mu\mu$F) connected from the junction of the added choke and R133 to ground. In addition, the connection of resistor R150 to the +150V lead has been rerouted to the junction of the resistors R125 and R133, choke L140, and capacitor C296.

Page 282, paragraph 285*a*. Make the following changes:

In line 22, after "position," add: Resistor R178 is 1,500 ohms in all receiver limiters of Order No. 08720–Phila–55.

In the fourth sentence from the end: change the value of R318 from 51,000 ohms to **51,100** ohms.

Page 283, figure 176. Make the following changes:

Add the following to "note 3": R178 IS 1,500 OHMS IN ALL RECEIVER LIMITERS ON ORDER NO. 08720–PHILA–55.

Change "note 4" to read: ON ORDERS NO. 32146 – PHILA – 51 **and 08720–PHILA–55,** R318 IS 51,100 OHMS.

Page 284, paragraph 287*a*. Change the second sentence to read as follows:

In some receivers on Order No. 16811–Phila–51, **in receivers bearing serial numbers 419 and above on Order No. 32146–Phila–51, and in all receivers on Order No. 08720–Phila–55,** the baseband amplifier contains capacitor C294.

Page 286, paragraph 289*c*. In line 15, after "–Phila–51," add: **all sets on Order No. 08720–Phila–55.**

Page 287, paragraph 290*c*. Make the following changes:

In line 16, after "respectively," add: In other units on Order No. 16811–Phila–51, the values of resistors R203 and R205 were subsequently changed from 5,110 ohms

to 5,600 ohms. On all sets of Order No. 08720–Phila–55, resistors R201, R202, R203, R204, and R205 are 147K, 3,480, 5,600, 10K, and 5,600 ohms respectively.

Add the following at the end: In afc circuits of receivers number 1400 and above on Order No. 32146–Phila–51, the values of resistors R201, R202, R203, R204, and R205 were changed to 147K, 3,480, 5,600, 10K, and 5,600 respectively.

Page 288, figure 178. Change "note 2" to read as follows:

C294 IS USED ON SOME BASE-BAND AMPLIFIERS IN RECEIVERS ON ORDER NO. 16811–PHILA–51. C294 IS 12 UUF ON ORDER NO. 32146–PHILA–51 (SERIAL NUMBERS 419 AND ABOVE). C294 IS NOT USED ON SERIAL NUMBERS 1 THROUGH 418 ON ORDER NO. 32146–PHILA–51.

4. (Added) IN ALL RECEIVER BASE-BAND AMPLIFIERS ON ORDER NO. 08720–PHILA–55 C294 IS 12 UUF, R233 IS 22,000 OHMS, AND R234 IS 6,800 OHMS.

Page 289, figure 179. Make the following changes:

Near R201 add: SEE NOTE 3.

Near C222 add: SEE NOTE 4.

3. (Added) IN AFC CIRCUITS OF RECEIVERS NO. 1400 AND ABOVE, ON ORDER NO. 32146–PHILA–51, R201, R202, R203, R204, AND R205 ARE 147K, 3,480, 5,600, 10K AND 5,600 OHMS RESPECTIVELY. IN SOME AFC CIRCUITS ON ORDER NO. 16811–PHILA–51 AND IN ALL AFC CIRCUITS ON ORDER NO. 08720–PHILA–55, RESISTORS R201, R202, R203, R204 AND R205 ARE 147K, 3,480, 5,600, 10K AND 5,600 OHMS RESPECTIVELY.

4. (Added) CAPACITOR C222, 4,700 UUF, IS CONNECTED FROM THE JUNCTION OF R211 AND R213, AND GROUND, ON SERIAL NO. 1 AND ABOVE ON ORDER 32146–PHILA–51.

Page 292, paragraph 296*b*. In line 8, after "Phila–51," add: **and Order No. 08720–Phila–55.**

Page 294, figure 182.

3. (Added) IN ALL BIAS SUPPLIES ON ORDER NO. 08720–PHILA–55, C211 AND C212 ARE 110 UUF.

Page 298, figure 184. Change the note to read: TERMINAL 4 OF CONNECTOR J108 IS CONNECTED TO TERMINAL 7 OF CONNECTOR J134 FOR ALL RECEIVERS ON ORDERS NO. **32146–PHILA–51** AND **08720–PHILA–51, AND RECEIVERS WITH SERIAL NUMBERS 19 AND ABOVE ON** ORDER NO. 16811–PHILA–51.

Page 299, paragraph 299*c*.

d. (Added) *Harmonic Generator (for Receivers Procured on Order No. 08720–Phila–55)*. The schematic diagram of all harmonic generators procured on this order number is shown in figure 276.

Page 304, paragraph 303. Make the following changes:

a. Change the second sentence of the note to read as follows:

The value of R267 is 1.2 megohms for all receivers on Order No. 32146–Phila–51.

Add the following to the note: The higher resistance value is used on all units of Order No. 08720–Phila–55.

b. Add the following to the note: The above circuit changes are included in all units of Order No. 08720–Phila–55.

Page 305, figure 188.

5. (Added) IN ALL ORDER WIRE CIRCUITS ON ORDER NO. 08720–PHILA–55, R267 IS 1.2 MEGOHM, R271 IS 150K, R273 IS 3.6K, AND C295 IS USED.

Page 306, paragraph 305*b*. In the fourth sentence change "Register" to read: **Resistor.**

Page 307, figure 189. Make the following changes:

Add the following to "Note 3:" **AND ALL SETS ON ORDER NO. 08720–PHILA–55.**

Change "Note 4" to read: R235 IS USED **ON ALL** SETS ON ORDER NO. **08720–PHILA–55, BUT IS NOT USED ON SETS SERIAL NUMBERS 1 THROUGH 47 ON ORDER NO. 16811–PHILA–51.**

6. (Added) IN ALL UNITS OF ORDER NO. 08720–PHILA–55, THE MODIFIED SIGNALING CIRCUIT (SHOWN IN INSERT) IS USED.

Page 312, paragraph 310*h*. In paragraph column, change "159" to read: **160.**

Page 319, paragraph 317*f*. Add the following: Listed in the transmitter modification chart below are subassemblies, parts changed, and reasons for circuit changes on Order No. 16811–Phila–51. All subassemblies on Order No. 08720–Phila–55 are the same as the latest type on Order No. 16811–Phila–51.

Subassembly	Type	Circuit changes	Reason for circuit change
Base-band amplifier and metering circuit.	1	R310 is 4.3k.	
	2	R310 is 3.3K	R310 changed to 3.3K to increase range of DISCR RF DRIVE potentiomter R139.
	3	Shielding added to lead from plate (pin 5) of V103.	To prevent undesired pickup.
	4	C312, 180 μμf, is in parallel with crystal rectifier CR101.	To bypass rf pickup around rectifier CR101.
Rf exciter	1	R actance modulator circuit is as shown in figure 140.	
	2	None. See figure 268	Reac'ance modulator circuit changed to that shown in figure 268 to improve interchannel modulation distortion characteristics of transmitter.
	3	1. Same as type 2 2. R172 is 100 ohms	1. Same as type 2. 2. To increase reading of TEST meter M102 when front-panel TEST switch S105 is in the DRIVER GRID position.
	4	1. Same as type 3 2. C311 .047 μf, connected from terminal 17 to ground.	1. Same as type 3. 2. To eliminate spurious radiation.
	5	1. Same as type 4 2. R148 and R149 removed, and R146 and R147 connected directly to pin 1 of V105 and pin 1 of V106, respectively. 3. Junction of R142 and R143 grounded, and C128, C129, J105, J106, R144, R145, and R142 removed.	1. Same as type 4. 2. Circuit simplification. The small resistance value of R148 and R149 was required for first type of rf exciter, but not for later types. 3. To eliminate circuit provided for alternative method of adjusting MOD TRIM capacitor C131.
Afc unit	1	None.	
	2	R295 is 1 meg, R299 is 6,810 ohms, R300 is 82.5K.	To prevent unbalance and low gain of 60-cps modulator V124 due to possible cutoff of modulator.
	3	R295, R299, R300, R301, R302, and R303 are 549K, 12.1K, 82.5K, 5110, 10K, and 5110 ohms, respectively.	This prevents overloading 60-cps modulator V124 due to large error signals. The phase of the output of the overloaded modulator may prevent rotation of the afc motor.
	4	Same as type 3 except that R301 and R303 are 5,600 ohms.	The intent of this change was to make the tolerance of R301 and R303 the same as that of potentiometer R302. The only JAN approved resistor which has a value nearest 5,110 ohms and the desired tolerance is a 5,600-ohm resistor. It is used in this circuit change.

Page 319. Paragraph 317*g*. Add the following (before the warning): The following power supply modification charts, one for the main unit and the other for the plug-in subassembly, list the circuit changes and the reason for the circuit changes for power supplies procured on Order No. 16811–Phila–51. All power supplies procured on Order No. 08720–Phila–55 will be the same as the latest type on Order No. 16811–Phila–51.

(1) The following are main unit types.

Main unit type	Serial No.	Circuit changes	Reason for circuit change
1	1–58	R33 not in circuit	1. See 2 below.
2	59 and up	None	2. R16, 100 ohms; and C31, .02 μf, added. R33 was added to provide better protection under shorted high-voltage conditions.
3	125 and up	1. Same as type 2 2. F5 is a slow-blow fuse	1. Same as type 2. 2. To prevent blowing of fuse during initial surge of current.
4	701 and up	1. Same as type 3 2. R34, 100 ohms, and C16, .02 μf, added.	1. Same as type 3. 2. To eliminate parasitic oscillations and wide-band noise, respectively.

(2) The following are plug-in subassembly types.

Plug-in subassembly type	Circuit changes	Reason for circuit changes
1	None.	
2	J5 connected to chassis ground	To insure that jack J5 is at chassis potential on all plug-ins.

Page 321, figure 191. In "note 2," next to the last line, after "RESPECTIVELY" add: **AND ON ALL UNITS ON ORDER NO. 08720–PHILA–55.**

Page 328, paragraph 317*i*. Add the following after "Type 8:"

	9	*a*. Same as type 8 *b*. C294 is 12 μμf	*a*. Same as type 8. *b*. To decrease deemphasis.

Page 328, table. Under "Limiter Discriminator and afc," add the following after "Type 5:"

	6	*a*. Same as type 5 *b*. R203 and R205 are 5,600 ohms	*a*. Same as type 5. *b*. The intent of this change was to make the tolerance of R203 and R205 the same as that of potentiometer R204. The only JAN approved resistor which has a value nearest 5,110 ohms and the desired tolerance is a 5,600-ohm resistor. Hence, it was used in this circuit change.

Page 329, paragraph 317*i*, table. Add the following:

IF. AMPLIFIER---	1	None.	
	2	L140, 14 mh, added in +150V lead between junction of R125 and R133, and junction of C173 and the +150V lead. C296, 4700 μμf, connected from junction of L140 and R133 to ground. The connection of R150 to the +150V lead rerouted to junction of R125, R133, L140 and C296.	Components form filter to prevent high-level rf induced into the B+ lead from being applied to the input stages and causing regeneration.
	3	*a.* Same as type 2----------	*a.* Same as type 2.
		b. R136 changed to 1.8 megohms----------	*b.* To provide additional bias for reducing gain of amplifier. The reduction of gain is required to squelch the audio output of all receivers on input signals of 250 microvolts.

Page 329, paragraph 317*i*. Add the following note after the table.

Note. On order No. 08720-Phila-55, the latest type of plug-in assemblies are furnished on all serial numbers.

Page 330, figure 200. In "note 6," line 1, after "PHILA-51" add: **AND ORDER NO. 08720-PHILA-51,**

Page 332, figure 202.

4. (Added) IN ALL PLUG-IN ASSEMBLIES ON ORDER NO. 08720-PHILA-55, THE RESISTANCES AND VOLTAGES ARE THE SAME AS FOR TYPE 9. (SEE CHART ON FIGURE.)
5. (Added) ON ORDER NO. 08720-PHILA-55 IN THE CHART UNDER THE **TYPE** COLUMN, **3 THROUGH 8** IS 3 THROUGH 9 AND **7 AND 8** IS 7, 8, AND 9.

Page 385, figure 250. Change the caption to read: **Calibrator, bottom view. (View A, Order No. 16811-Phila-51, serial numbers 48 and above, and Order No. 32146-Phila-51; view B, Order No. 16811-Phila-51, serial numbers 1 through 47.)**

Page 454, paragraph 381*a*(1), line 2. Change "(par. 66)" to read: **(par. 67).**

Figure 268. (Contained in separate envelope). Make the following changes:

Change "note 15" to read as follows:

C312 USED ON TYPE 4 METERING CIRCUITS **IN TRANSMITTERS ON ORDER NO. 16811-PHILA-51, AND IN TRANSMITTERS BEARING SERIAL NUMBERS 230 AND ABOVE** ON ORDER NO. **32146**-PHILA-51.

Add the following to "note 18:" THIS CHANGE IS ALSO EFFECTIVE WITH SERIAL NO. 1400 AND ABOVE ON ORDER NO. 32146-PHILA-51.

Add the following to "note 19:" R301 AND R303 ARE 5600 OHMS EFFECTIVE WITH SERIAL NO. 1400 AND ABOVE ON ORDER NO. 32146-PHILA-51.

Near R172 add: SEE NOTE 21.

21. (Added) IN SOME AFC UNITS, R295, R299, R301, R302, AND R303 ARE 549K, 12.1K, 82.5K, 5,600, 10K AND 5,600 OHMS, RESPECTIVELY. R172 IS 100 OHMS IN TRANSMITTERS ON ORDER NO. 32146-PHILA-51.
22. (Added) ALL SUBASSEMBLIES ON ORDER NO. 08720-PHILA-55 ARE THE SAME AS THE LATEST TYPE OF SUBASSEMBLIES ON ORDER NO. 16811-PHILA-51. (SEE TRANSMITTER MODIFICATIONS CHART, PARAGRAPH 317*f*.)

Replace the blower motor schematic in the lower right hand corner of the main schematic with the schematic shown below.

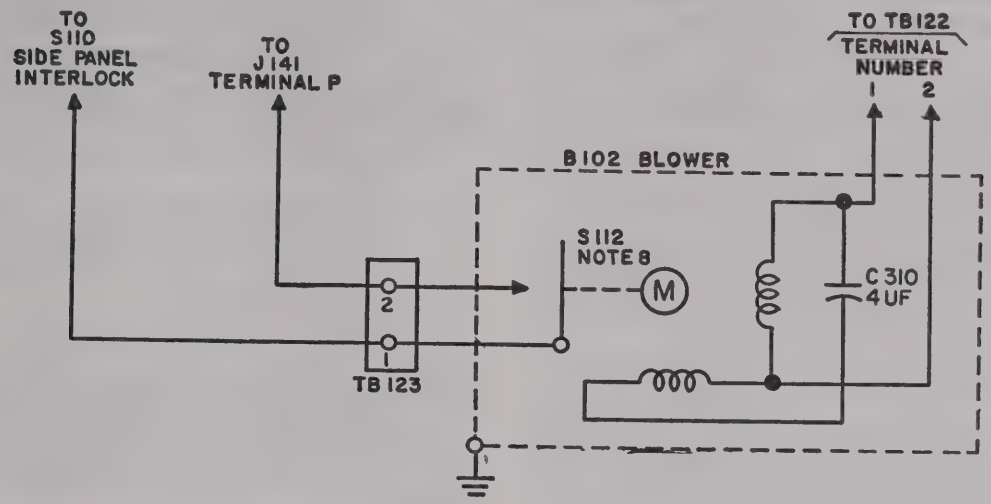

TM687-C1-2

Figure 270. (Contained in separate envelope). Make the following changes:

Add "SEE NOTE 4" next to the two undesignated capacitor symbols in the cathode circuit of tube V2 (near C24).

4. (Added) CAPACITOR SYMBOLS REPRESENT INSULATING SHIMS WHICH ISOLATE THE HEATER VOLTAGE FROM GROUND.

Change connector marked "TO TRANSMITTER, RADIO T-302/TRC" from male to **female** type. Symbolize the connector "P5."

Figure 275. (Contained in separate envelope). In "NOTE 3", change "(ORDER NO. 168811-PHILA-51)" to read: **(ORDER NO. 16811-PHILA-51).**

4. (Added) IN THE LATER TYPES OF POWER-SUPPLY PLUG-IN ASSEMBLIES ON ORDER NO. 16811-PHILA-51, J5 IS CONNECTED TO CHASSIS GROUND.

5. (Added) ALL POWER SUPPLIES ON ORDER NO. 08720-PHILA-55 ARE THE SAME AS THE LATEST TYPE OF POWER SUPPLY ON ORDER NO. 16811-PHILA-51. (SEE POWER SUPPLY MODIFICATION CHARTS PARAGRAPH 317*g*.)

Figure 276. (Contained in separate envelope): Make the following changes:

Replace the schematic of Handset H-90/U in the lower right hand corner of the main schematic with the schematic shown below.

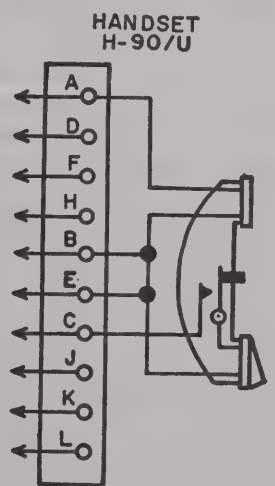

TM687-C1-1

Add a ground symbol at the junction of the leads connected to pins 0 and 1 of connector J133 and pin 1 of connector J134.

Change "note 11" to read as follows:

C294, **12 UUF, IS** USED ON ORDER NO. 16811–PHILA–51 BASE-BAND AMPLIFIER AND ORDER WIRE ASSEMBLIES (TYPE 4). **C294 IS 12 UUF** ON ORDER NO. 32146–PHILA–51 (SERIAL NUMBERS 419 AND ABOVE). **C294 IS NOT USED ON SERIAL NUMBERS 1 THROUGH 418 ON ORDER NO. 32146–PHILA–51.**

Near R201 add: "SEE NOTE 19."

18. (Added) IN SOME AFC CIRCUITS ON ORDER NO. 16811–PHILA–51, R201, R202, R203, R204, AND R205 ARE 147K, 3,480, 5,110, 10K, AND 5,110, RESPECTIVELY. IN A LATER CIRCUIT ON ORDER NO. 16811–PHILA–51 R203 AND R205 WERE CHANGED TO 5,600 OHMS.
19. (Added) ON ORDER NO. 32146–PHILA–51, SERIAL NO. 1400 AND ABOVE, R201, R202, R203, R204, AND R205, ARE 147K, 3,480, 5,600, 10K AND 5,600 OHMS RESPECTIVELY.
20. (Added) IN THE LATEST IF. AMPLIFIER ON ORDER NO. 16811–PHILA–51, L140, 14 MH, IS ADDED IN +150V LEAD BETWEEN JUNCTION OF R125 AND R133, AND JUNCTION OF C173 AND THE +150V LEAD. C296, 4,700 UUF, IS CONNECTED FROM JUNCTION OF L140 AND R133 TO GROUND. THE CONNECTION OF R150 TO THE +150V LEAD IS REROUTED TO JUNCTION OF R125, R133, L140 AND C296. ALSO R136 HAS BEEN CHANGED TO 1.8 MEGOHMS.
21. (Added) ON ORDER NO. 32146–PHILA–51, C222, 4,700 UUF, IS CONNECTED BETWEEN THE JUNCTION OF R211, R213 AND GROUND.
22. (Added) ALL PLUG-IN SUBASSEMBLIES ON ORDER NO. 08720–PHILA–55 ARE THE SAME AS THE LATEST TYPE OF SUBASSEMBLIES ON ORDER NO. 16811–PHILA–51. (SEE RECEIVER MODIFICATION CHART PARAGRAPH 317*i*.)

[AG 413.7 (15 May 1956)]

Figure 283. (Contained in separate envelope). Make the following changes:

Near CR101 on TB103, add: "SEE NOTE 15."

15. (Added) ON ORDER NO. 32146–PHILA–51 (SERIAL NUMBERS 230 AND ABOVE), C312 IS CONNECTED ACROSS CR101.

Page 465, figure 285 (Contained in separate envelope). Change the caption to read: **Rf exciter plug-in assembly, wiring diagram for types 2 and 3 procured on Order No. 16811–Phila–51 and serial numbers 1 to 1400 on Order No. 32146–Phila–51.**

Near C311 add: "SEE NOTE 12."

12. (Added) ON ORDER NO. 32146–PHILA–51 C311 IS CONNECTED FROM C168 TO GROUND.

Page 465, figure 286 (Contained in separate envelope). Add the following to the caption: **serial numbers 1400 and above on Order No. 32146–Phila–51.**

Figure 297. (Contained in separate envelope). Make the following changes:

Near XV3 add: "SEE NOTE 14."

14. (Added) IN POWER SUPPLIES SUPPLIED ON ORDER NO. 32146–PHILA–51, R34 IS ADDED BETWEEN R9 AND PIN 3 OF XV3, AND C16 IS ADDED BETWEEN PIN 1 OF XV4 AND PIN 4 OF XV3.

Page 473, figure 305 (Contained in separate envelope). Make the following changes:

Add the following to the caption: **and serial numbers 419 and above on Order No. 32146–Phila–51.**

Near C294 add: "SEE NOTE 9."

9. (Added) IN RECEIVERS BEARING SERIAL NUMBERS 1 THROUGH 418, C294 IS NOT USED.

DEPARTMENT OF THE ARMY TECHNICAL MANUAL
DEPARTMENT OF THE AIR FORCE TECHNICAL ORDER

RADIO SET AN/TRC-24, RADIO TERMINAL SET AN/TRC-35, AND RADIO RELAY SET AN/TRC-36

TM 11-687
TO 31R2-2TRC24-11
Changes No. 2

DEPARTMENTS OF THE ARMY AND THE AIR FORCE
WASHINGTON 25, D. C., *7 November 1956*

TM 11-687/TO 31R2-2TRC24-11, 14 September 1955, is changed as follows:

Add "IN THE FIRST VERSION (RUN ONE) OF" in the following places in the manual:

Page 219, figure 140 (C 1), note. Fourth sentence. After "CIRCUITS."
Page 226, figure 144 (C 1), note, line 5. After "32146-PHILA-51."
Page 249, figure 160 (C 1), note. Before "2D."
Page 255, figure 164 (C 1), note 3, line 9. Before "ORDER."
Page 256, figure 165 (C 1), note 3, line 9. Before "ORDER."
Page 258, figure 167 (C 1), note 5, line 9. Before "ORDER."
Page 259, figure 168 (C 1), note 7, line 9. Before "ORDER."
Page 283, figure 176 (C 1), note 3, line 2. After "OHMS."
Page 288, figure 178 (C 1), note 4, line 1. Before "RECEIVER."
Page 289, figure 179 (C 1), note 3, line 9.
Page 294, figure 182 (C 1), note 3, line 1. Before "BIAS."
Page 298, figure 184 (C 1), note, line 5. After "AND."
Page 305, figure 188 (C 1), note 5, line 1. Before "ORDER."
Page 307, figure 189 (C 1), note 3, line 2.
Page 307, figure 189 (C 1), note 4, line 1. After "USED."
Page 307, figure 189 (C 1), note 6, line 1. Before "UNITS."
Page 321, figure 191 (C 1), note 2, next to last line. After "AND."
Page 330, figure 200 (C 1), note 6, line 1. After "AND."
Page 332, figure 202 (C 1), note 4, line 1. Before "PLUG-IN."

Delete "IN ALL" in the following places in the manual:

Page 249, figure 160 (C 1), note, line 1. Before "2D."
Page 288, figure 178 (C 1), note 4, line 1.
Page 289, figure 179 (C 1), note 3, line 9.
Page 294, figure 182 (C 1), note 3, line 1.
Page 298, figure 184 (C 1), note, line 5.
Page 305, figure 188 (C 1), note 5, line 1.
Page 307, figure 189 (C 1), note 6, line 1.
Page 332, figure 202 (C 1), note 4, line 1.

Delete "ALL" in the following places in the manual:

Page 219, figure 140 (C 1), note, second sentence.
Page 307, figure 189 (C 1), note 3, last sentence.

Delete "ON ALL" in the following places in the manual:

Page 307, figure 189 (C 1), note 4, line 2.
Page 321, figure 191 (C 1), note 2, next to last line.

Delete "all" and substitute "the first version (run 1) of" in the following places in the manual:

Page 278, paragraph 274*a*, next to last sentence.
Page 281, paragraph 283*a* (C 1), fifth sentence.
Page 282, paragraph 285*a* (C 1), line 23.
Page 284, paragraph 287*a* (C 1), second sentence.
Page 286, paragraph 289*c* (C 1), line 16.
Page 287, paragraph 290*c* (C 1), line 20.
Page 304, paragraph 303*a* (C 1), note, line 7.
Page 304, paragraph 303*b* (C 1), note, line 10.
Page 319, paragraph 317*f* (C 1), line 7.
Page 319, paragraph 317*g* (C 1), last sentence.

Figure 268 (in separate envelope) (C 1), note 2, line 1.

Figure 275 (in separate envelope) (C 1), note 5, line 1.

Figure 276 (in separate envelope) (C 1), note 22, line 1.

Substitute "Voltmeter ME–30A/U" for "AN/URM–70" in the following places in the manual:

Page 443, paragraph 366*a*(1), line 1.
Page 444, paragraph 366*a*(14), line 4.
Page 444, paragraph 366*b*(3), line 1.
Page 445, paragraph 366*c*(2), line 3.
Page 445, paragraph 366*d*(2), line 3.
Page 445, paragraph 366*d*(3), line 5.
Page 445, paragraph 366*d*(4), line 3.
Page 445, paragraph 366*e*(1), line 4.

Page 38, paragraph 24*k*(7) (C 1), note, line 1. Delete "On Order No. 08720–Phila–55."

Page 42, paragraph 30, make the following changes:

Line 20. After "made" add: On Order No. 16811–Phila–51.

Last sentence (C 1). Delete the last sentence. Add the following after "illustrations."

The different circuit variations of the plug-in assemblies furnished on Order No. 08720–Phila–55 will be indicated by RUN numbers stamped on the units. The first version of the assemblies will have *RUN 1* stamped on the chassis. If a second version of the circuit of an assembly is manufactured subsequently, all assemblies containing the changed circuit will be stamped "RUN 2"; if a third version is manufactured, assemblies containing the changed circuit will be stamped *RUN 3*, etc. *The first circuit version (RUN 1) of all plug-in assemblies on Order No. 08720-Phila-55 are the same as the latest of assemblies on Order No. 16811-Phila-51.* To date there are two versions (RUN 1 and RUN 2) of the receiver base band amplifier and order wire plug-in assembly and one version of all the other plug-in assemblies on Order No. 08720–Phila–55. Chart (C 1). In the "Types" column adjacent to "Limiter-discriminator, afc plug-in assembly," change "6" to read: **7.**

Page 106, paragraph 72*b*, make the following changes:

(3), line 2, change "three" to read: **four.**

(8.1) (Added) Insert the trouble lamp assembly into the left-hand compartment above the large compartment in which cable CX–2253/U is secured. Wind the cord of the trouble lamp assembly into a coil approximately 9 inches in diameter and place this coil on top of cable CX–2253/U.

(9) lines 4 and 5. Delete "Electrical Special Purpose Cable Assembly CX–2253/U" and substitute: the coiled cord of the trouble lamp assembly.

(9) line 11. After "CX–2253/U" add: the coiled cord of the trouble lamp assembly.

(12) Rescinded.

Page 131, paragraph 97, add the following after *a*:

Caution: Reenergizing the power supply with the 750v dc switch in the ON position after a shutdown of less than 1 minute, could apply ac voltage to the plates of the high-voltage rectifiers while the tube filaments are cold. Arcing of the rectifiers, tripping of the 115v ac circuit breaker, and damage to power supply components may result. To avoid this, be sure that the 150v dc switch and especially the 750v dc switch are in the OFF positions before setting the 115v ac circuit breaker to the ON position. Allow a 1-minute warmup (115v ac circuit breaker and 150v dc switches in ON positions) before setting the 750v dc switch to the ON position if the power supply is being started after a shutdown of 1 minute or less. Allow a 10-minute warmup if the power supply is being started after a shutdown of more than 1 minute (*c* below).

Page 135, paragraph 105*b*(16), line 8. After "amounts" add:

Do not set the MULTIPLIER OUTPUT COUPLING to make the TEST meter reading exceed 50 ma (full-scale deflection).

Page 136, paragraph 105*c* (C 1), caution, lines 1 and 2. Delete: "For equipment procured Order No. 08720–Phila–55."

Page 137, paragraph 107*b*(5) (C 1), make the following changes:

Line 2 of the first sentence. Change "(11)" to read: **(15).**

Delete the last sentence.

Page 149, paragraph 124*a*(1), line 2. Delete "switch" and substitute:

750v dc and 150v dc switches.

151.1. Replacing Tube Shields of Transmitter Rf Exciter

(fig. 127)
(Added)

In some Rf exciters on Order No. 16811–Phila–51 and in all exciters on Order No. 08720–Phila–55, the shields of tubes V105 through V109 are each marked with an arrow and the chassis is marked with a dot near each tube socket. In these units, replace each of the above shields so that the arrow is near the dot. This insures that the tube shields are always replaced the same way, and prevents possible mistuning of the critical Rf circuits of the exciter as a result of replacing the tube shields.

Page 268, paragraph 251*c*(1) (C 1), change the fourth sentence to read: **These items are also included in all power supplies on Order No. 32146–Phila–51 and on the first version (RUN 1) of power supplies on Order No. 08720–Phila–55.**

Page 271, figure 172 (C 1), note 2, line 4. After "AND" add: IN THE FIRST VERSION (RUN 1) OF POWER SUPPLIES ON.

Page 277, paragraph 272*a* (C 1), second sentence, line 4. After "and" add: in the first version (RUN) of sets on.

Page 283, figure 176 (C 1), change note 4 to read: **ON ORDER NO. 32146–PHILA–51 AND IN FIRST VERSION (RUN 1) ON ORDER NO. 08720–PHILA–55, R318 IS 51,000 OHMS.**

Page 289, figure 179, make the following changes: Add a capacitor symbol from ground to the junction of the afc motor winding, rectifier CR107, and resistor R206. Label the added capacitor "C298, .01 μF" and add "SEE NOTE 3" adjacent to it.

NOTE 3. (Added) CAPACITORS C297 AND C298 ARE USED IN SOME AFC CIRCUITS ON ORDER NO. 16811–PHILA–51 AND ON THE FIRST VERSION (RUN 1) OF AFC CIRCUITS ON ORDER NO. 08720–PHILA–55.

Page 295, paragraph 298*c*, make the following changes:

In line 6, change "(fig. 276)" to read: (**fig. 277**).
Delete the second sentence.

Page 297, paragraph 298:

d. (Added) *Harmonic Generator* (*For Receivers Procured on Order No. 08720–Phila–55*).

The schematic diagram of the first version (RUN 1) of harmonic generators procured on this order number is shown in figure 277

Page 299, paragraph 299 (C 1), *d*. Rescinded.

Page 304, paragraph 303*b* (C 1), add the following to the note: In the second version (RUN 2) of the base band amplifier and order wire plug-in assemblies on Order No. 08720–Phila–55, resistor R272 is 620 ohms and capacitor C295 is not used. The lower resistance value increases the plate current of the first stage of tube V126 in order to increase the transconductance to a level at which variations among tubes are minimized. The removal of capacitor C295 introduces degeneration to compensate for the increased stage gain that would result from the increased transconductance. The microphonic noise and hum output of the amplifiers are not increased by these circuit changes.

Page 305, figure 188. Note.

6. (Added) IN THE SECOND VERSION (RUN 2) OF BASE BAND AMPLIFIER AND ORDER WIRE PLUG-IN ASSEMBLIES ON ORDER NO. 08720–PHILA–55, R272 IS 620 OHMS AND C295 IS NOT USED.

Page 328, paragraph 317*i* (C 1), make the following changes: Table. Under "Limiter Discriminator and afc" add the following after "Type 6."

Subassembly	Type	Circuit changes	Reason for circuit change
	7	*a.* Same as type 6. *b.* Three 0.01-μf capacitors added as follows: C297 added from ground to junction of R197 and pin 16 of P111. C298 added from ground to junction of CR107 and pin 12 of P111. C299 added from ground to terminal of L136 labeled "TO HTRS X."	*a.* Same as type 6. *b.* To reduce magnitude of spurious signals that may appear in some receivers.

Change note at end of table to read:

Note. **The first version (RUN 1) of plug-in assemblies on Order No. 08720–Phila–55 is the same as the latest types of assemblies furnished on Order No. 16811–Phila–51. To date there are two versions (RUN 1 and RUN 2) of base band amplifier and order wire assemblies and one version of all other assemblies on Order No. 08720–Phila–55. (Refer to note in paragraph 303*b* and note 23 in figure 276.)**

Figure 276 (in separate envelope), add the following notes:

23. IN THE SECOND VERSION (RUN 2) OF BASE BAND AMPLIFIER AND ORDER WIRE ASSEMBLIES ON ORDER NO. 08720–PHILA–55, R272 IS 620 OHMS, AND C295 IS NOT USED

24. IN THE LATEST LIMITER DISCRIMINATOR AND AFC ASSEMBLIES ON ORDER NO. 16811–PHILA THREE .01-μF CAPACITORS HAVE BEEN ADDED AS FOLLOWS: C297, FROM GROUND TO JUNCTION OF R197 AND PIN 16 OF P111; C298, FROM GROUND TO JUNCTION OF CR107 AND PIN 12 OF P111; C299, FROM GROUND TO TERMINAL OF L136 LABELED "TO HTRS X."

Figure 283 (in separate envelope), make the following changes:

Add "SEE NOTE 15" near the shielded lead connected to pin 6 of XV104.

15. (Added) ON TRANSMITTER BASE BAND AMPLIFIER AND METERING CIRCUIT ASSEMBLIES ON ORDER NO. 08720–PHILA–55, THE SHIELDED LEAD CONNECTED TO PIN 6 OF XV104 IS NOT GROUNDED AT GROUND LUG TO LEFT OF XV104.

Page 332, figure 202, (C 1), in "note 5," line 1, delete:

ON ORDER NO. 08720–PHILA–55.

[AG 413.44 (1 Nov 56)]

Figure 303 (in separate envelope).

NOTE 9. (Superseded) IN THE LATEST LIMITER DISCRIMINATOR AND AFC ASSEMBLIES ON ORDER NO. 16811–PHILA–51 AND THE FIRST VERSION (RUN 1) OF THESE ASSEMBLIES ON ORDER NO. 08720–PHILA–55, THREE .01–μF CAPACITORS HAVE BEEN ADDED AS FOLLOWS:

C297, FROM JUNCTION OF R197 (ON TB107) AND TWO LEADS TO GROUND LUG OF XV110 NEAR PIN 4.

C298, FROM JUNCTION OF CR107 (ON TB107) AND TWO LEADS TO GROUND LUG OF XV110 NEAR PIN 4.

C299, FROM JUNCTION OF L136 (ON TB 106) AND SINGLE LEAD TO GROUND LUG BETWEEN TERMINALS 5 AND 6 OF Z112.

Figure 304 (in separate envelope). Make the following changes:

Add capacitor C294 between E125 and the ground lug near XV121 (station 14) and add "SEE NOTE 10" near the added capacitor. Add capacitor C294 between E136 (station 27) and pin 8 of XV126 (station 22) and add "SEE NOTE 11" near the added capacitor.

NOTE 10. (Added) C294 IS USED IN SOME BASE BAND AMPLIFIER AND ORDER WIRE ASSEMBLIES ON ORDER NO. 16811–PHILA–51 AND ON "RUN 1" AND "RUN 2" ASSEMBLIES ON ORDER NO. 08720–PHILA–55.

NOTE 11. (Added) C295 IS USED IN SOME BASE BAND AMPLIFIER AND ORDER WIRE ASSEMBLIES ON ORDER NO. 16811–PHILA–51 AND IN THE FIRST VERSION (RUN 1) OF THESE ASSEMBLIES ON ORDER NO. 08720–PHILA–55. C295 IS NOT USED IN THE SECOND VERSION (RUN 2) OF BASE BAND AMPLIFIER AND ORDER WIRE ASSEMBLIES ON ORDER NO. 08720–PHILA–55.

DEPARTMENT OF THE ARMY TECHNICAL MANUAL
DEPARTMENT OF THE AIR FORCE TECHNICAL ORDER

TM 11-687
TO 31R2-2TRC24-11
C 3

RADIO SET AN/TRC-24, RADIO TERMINAL SET AN/TRC-35, AND RADIO RELAY SET AN/TRC-36

TM 11-687
TO 31R2-2TRC24-11
CHANGES No. 3

DEPARTMENTS OF THE ARMY AND THE AIR FORCE
WASHINGTON 25, D. C., *21 February 1957*

TM 11-687/TO 31R-2TRC24-11, 14 September 1955, is changed as follows:

Page 92, paragraph 67*b*(5). Add the following note:

Note. Tighten the base locks fingertight. If the base locks are too tight, the levers (handles) on the mast base may shear off.

Page 130, paragraph 93*b*. Add the following note:

Note. Before setting the 115V AC switch to the ON position, be sure that the 150V DC and the 750V DC switches of the power supply are in the OFF position.

Page 134, paragraph 104. Make the following change:

c. (Superseded) Set the 750V DC switch on the power supply to the ON position. When operating from a cold start, the transmitter should warm up for 10 minutes (115V AC and 150V DC switches in the ON position) before setting the 750V DC switch to the ON position. If the transmitter has been operating for some time and the master circuit breaker trips, or is tripped, allow a delay of 1 minute before setting the 750V DC switch in the ON position. If these precautions are not followed, it is possible that voltage will be applied to the plates of the high-voltage rectifiers while the tube filaments are cold; this will cause arcing of the rectifiers, tripping of the 115V DC circuit breaker, and damage to the power supply components.

Page 176, paragraph 149*b*. Make the following changes:

(1) (Superseded) Mark in some suitable manner the keyway location on the outside of the tube socket, and mark the key position on the anode structure of the tube. Carefully position a replacement tube so that it is alined with the keyway.

Add the following note after (3):

Note (Added). If the retainer does not seat properly, it should be beveled on one side.

Page 176, paragraph 150*b*. Make the following change:

(1) (Superseded) Mark in some suitable manner the keyway location on the outside of the tube socket, and mark the key position on the anode structure of the tube. Carefully position a replacement tube so that it is alined with the keyway.

Add the following note after (2):

Note (Added). If the retainer does not seat properly, it should be beveled on one side.

Page 188, paragraph 158. Make the following changes:

b. (Superseded) Rotate the XTAL SEL knob on the front panel (fig. 87) to the DISCR CENTER position and hold the control in that position. Loosen the setscrew that is visible through the hole in the bottom of the upper chassis.

c. (Superseded) Rotate the XTAL SEL knob to the DECADE CHANS position and loosen the setscrew that is visible through the hole in the upper chassis. The shaft should drop down or, if it does not, it may be pulled down by applying a little force.

Page 188, paragraph 160. Make the following change:

a. (Superseded) Swing up the top section of the transmitter. Rotate front-panel PULSED OSC TUNE knob until the adapter-shaft setscrew can be seen through the hole provided for this purpose.

Page 317, paragraph 315. Add the following after item 28:

Symptom	Probable trouble	Correction
29. MEASURE meter indicates spurious voltage when MEASURE switch is set at MTR CAL or MOD ADJ positions.	Circulating or induced current in shield braid on wires leading to plate and grid of tube V104.	Cut shield connecting to ground lug adjacent to socket XV104.

Figure 283 (in separate envelope). Make the following changes (C 2):

(Superseded) add "SEE NOTE 15" at lower left of socket XV104.

15. (Superseded) ON TRANSMITTER BASE BAND AMPLIFIER AND METERING CIRCUIT ASSEMBLIES ON ORDER NO. 08720-PHILA-55, THE SHIELDED LEADS CONNECTED TO PINS 6 AND 7 OF XV104 ARE NOT GROUNDED AT GROUND LUG TO LEFT OF XV104.

Delete the ground connection between shield symbols on leads to pins 6 and 7 of XV104 (at socket end) and ground lug, at left of XV104.

[AG 413.44 (18 Feb 57)]

BY ORDER OF THE SECRETARIES OF THE ARMY AND THE AIR FORCE:

MAXWELL D. TAYLOR,
General, United States Army,
Chief of Staff.

OFFICIAL:
HERBERT M. JONES,
Major General, United States Army,
The Adjutant General.

N. F. TWINING,
Chief of Staff, United States Air Force.

OFFICIAL:
CHARLES M. McDERMOTT,
Colonel, United States Air Force,
Acting Air Adjutant General.

DISTRIBUTION:

Active Army:

CNGB	Gen & Br Svc Sch	11-15C
ASA	Gen Depots	11-16C
Tec Svc, DA	Sig Sec, Gen Depots	11-18C
Tec Svc Bd	Sig Depots	11-57C
Hq CONARC	US Army Tng Cen	11-95R
CONARC Bd	POE (OS)	11-98R
CONARC Bd Test Sec	Trans Terminal Comd	11-117R
Army AA Comd	Army Terminals	11-127R
OS Maj Comd	OS Sup Agencies	11-128C
OS Base Comd	Army Elct PG	11-500R
Log Comd	Sig Fld Maint Shops	11-557C
MDW	Sig Lab	11-587R
Armies	ACS	11-592R
Corps	Mil Dist	11-597R
Ft & Cp	Units organized under following TOE's:	
Sp Wpn Comd	11-7C	
Army Cml Cen		

NG: State AG; units—same as Active Army.

USAR: None.

For explanation of abbreviations used, see SR 320-50-1.

TECHNICAL MANUAL

RADIO SETS AN/TRC-24 AND AN/GRC-81, RADIO TERMINAL SETS AN/TRC-35 AND AN/GRC-82, AND RADIO RELAY SETS AN/TRC-36 AND AN/GRC-83

TM 11-687
CHANGES No. 4

HEADQUARTERS,
DEPARTMENT OF THE ARMY
WASHINGTON 25, D. C., *13 May 1958*

TM 11-687, 14 September 1955, is changed as indicated so that the manual applies to—

Nomenclature	*Order No.*	*Serial No.*
Radio Set AN/GRC-81	50972-Phila-57	All
Radio Terminal Set AN/GRC-82	50972-Phila-57	All
Radio Relay Set AN/GRC-83	50972-Phila-57	All

Change the title of the manual to read: RADIO SETS AN/TRC-24, **AND AN/GRC-81,** RADIO TERMINAL SETS AN/TRC-35 **AND AN/GRC-82,** AND RADIO RELAY SETS AN/TRC-36 **AND AN/GRC-83.**

Note. The parenthetical reference to previous changes (example: page 5 of C 2) indicates that pertinent material was published in that change.

Page 12.

7. Components

(Superseded)

a. General. The components comprising the various types of terminal and repeater sets have been separated into major nomenclatured groups. These nomenclatured groups in turn are divided into nomenclatured components. The table in *b* below lists the major groups forming terminal and relay sets operating in the B and C bands. The components forming each of the major groups are covered in *c* below.

b. Table of Major Groups.

Major group	Quantity required					
	B and C bands			C band		
	Radio Set AN/TRC-24	Radio Terminal Set AN/TRC-35	Radio Relay Set AN/TRC-36	Radio Set AN/GRC-81	Ratio Terminal Set AN/GRC-82	Radio Relay Set AN/GRC-83
Radio Set Group OA-1387/GRC	1	2	3	1	2	3
Power Accessories Group OA-1676/GRC	1	1	1	1	1	1
Generator Set Group OA-1675/GRC	1	1	1	1	1	1
Antenna Group OA-1389/GRC	1	1	2	1	1	2
Antenna Accessories Group OA-1398/GRC	1	1	2	1	1	2
Amplifier Group OA-1392/GRC	1	2	3	----------	----------	----------
Antenna-Filter Group OA-1393/GRC	1	1	2	----------	----------	----------
Amplifier Group OA-1394/GRC	1	2	3	1	2	3
Antenna-Filter Group OA-1395/GRC	1	1	2	1	1	2

c. Table of Components. The tables in (1) through (9) below indicate the components forming all the major groups listed in *b* above.

(1) *Components of Radio Set Group OA–1387/GRC.*

Quantity	Item	Height (in.)	Depth (in.)	Width (in.)	Unit weight (lb)
1	Transmitter assembly:				
1	Transmitter Case CY–1341/TRC	18½	22	20⅝	120.75 (with contents).
1	Radio Transmitter T–302/TRC or T–302A/TRC.				
1	Dummy filter				
1	Circuit label book				
1	Receiver assembly:				
1	Receiver Case CY–1339/TRC	17⅛	18¼	20⅝	96.5 (with contents).
1	Circuit label book				
1	Radio Receiver R–417/TRC or R–417A/TRC				
1	Dummy filter				
1	Power supply assembly:				
1	Power Supply Case CY–1340/TRC	17⅛	18⅜	20⅝	115 (with contents).
1	Power Supply PP–685/TRC or PP–685A/TRC				
1	Circuit label book				
1	Accessories Kit MK–133/TRC:				
1	Accessories Case CY–1342/TRC	18⅝	20⅝	21½	94 (with contents).
2	Technical manual TM 11–687				
1	Capacitor CP05A1EC104K				
1	Resistor RC42GF131J				
1	Crystal rectifier 1N21B				
1	Crystal rectifier 1N69				
3	Incandescent lamp				
12	Fuse F02G1R00A				
6	Fuse F02D1R50B				
6	Fuse F02G3R00A				
6	Fuse F02GR500A				
6	Fuse F09G5R0CA				
6	Fuse F09G10R0A				
6	Fuse F09G20R0A				
12	Fuse F02GR500B				
1	Handset H–90/U				
1	Electron tube 5879				
4	Electron tube 6CB6				
1	Electron tube 6AV6				
6	Electron tube 5670				
2	Electron tube 5751				
2	Electron tube 6AN5				
6	Electron tube 5654/6AK5W				
1	Electron tube 5725/6AS6W				
1	Electron tube 5726/6AL5W				
5	Electron tube 6J4				
1	Electron tube 5933				
4	Electron tube 5998				
2	Electron tube 5R4WGY				
1	Electron tube 836				
3	Electron tube 4X150A				
2	Electron tube 4X150G				
1	Electron tube OA3				
1	Incandescent lamp 50 W., 120 V.				
1	Trouble lamp				
1	Screwdriver TL–360/U				
1	Telephone Cable Assembly CX–1512/U (12 ft).				
1	Electrical Power Cable Assembly CX–2257/U (10 ft).				

(1) *Components of Radio Set Group OA–1387/GRC*—Continued.

Quantity	Item	Height (in.)	Depth (in.)	Width (in.)	Unit weight (lb)
	Accessories Kit MK–133/TRC—Continued				
	Radio Frequency Cable Assembly CG–1031/U (6 in.).				
	Electrical Power Cable Assembly CX–2256/U (8 ft).				
	Electrical Power Cable Assembly CX–2258/U (8 ft).				
1	Electrical Special Purpose Cable Assembly CX–2252/U (6 ft).				
1	Electrical Special Purpose Cable Assembly CX–2253/U (4 ft).				
1	Fixed Autotransformer Power Transformer TF–167/TRC.				

(2) *Components of Generator Set Group OA–1675/GRC.*

Quantity	Item	Height (in.)	Depth (in.)	Width (in.)	Unit weight (lb)
2	Generator Set PU–286	31	44	22	725.
2	Ground Rod MX–148/G				
2	Gasoline spouts				
10	Gasoline drums				
1	Electrical Power Cable Assembly CX–2251/U (150 ft).				
2	Electrical Power Cable Assembly CX–2254/U (10 ft).				
1	Cable Reel RC–405/TR				

(3) *Components of Power Accessories Group OA–1676/GRC.*

Quantity	Item	Height (in.)	Depth (in.)	Width (in.)	Unit weight (lb)
1	Accessories Case CY–1343/TRC	18⅝	20⅝	21½	140 (with contents).
1	Wattmeter ME–82/U				
1	Interconnecting Box J–532/U				
1	Switch Box SA–331/U				
12	Fuse, 10 amp, F09G10R0A				
1	Screwdriver TL–358/U				
1	Maintenance Cable Kit Assembly:				
1	Radio Frequency Cable Assembly CG–718/U (5 ft).				
2	Electrical Special Purpose Cable Assembly CX–2406/U.				
1	Electrical Special Purpose Cable Assembly CX–2420/U.				
1	Electrical Special Purpose Cable Assembly CX–2473/U.				
2	Radio Frequency Cable Assembly CG–789A/U				
1	Radio Frequency Cable Assembly CG–1091/U				
1	Radio Frequency Cable Assembly CG–1103/U				
1	Chassis Assembly				

(4) *Components of Antenna Group OA–1389/GRC.*

Quantity	Item	Height (in.)	Depth (in.)	Width (in.)	Unit weight (lb)
1	Antenna Reflector Case CY–1385/TRC	12½	33⅜	51¾	132 (with contents).
2	Antenna Reflector AT–414/TRC				
1	Antenna cradle				
1	Antenna Reflector Support Case CY–1387/TRC	6½	30	33⅝	70 (with contents).
1	Antenna Reflector Support AB–325/TRC				
4	Guy MX–1483/G (75 ft)				
2	Reflector shackle assembly				
2	Reel assembly				
4	Anchor shackle assembly				
6	Cable clamp				
1	Wrench, 9/16-in. and ½-in.				
1	Wrench, ⅞-in.				
1	Wrench, ½-in., ⅜-in. drive				
1	Wrench, 9/16-in ⅜-in. drive				

(5) *Components of Antenna Accessories Group OA–1398/GRC.*

Quantity	Item	Height (in.)	Depth (in.)	Width (in.)	Unit weight (lb)
1	Mast AB–235/G:				
15	Mast section AB–332/G				
3	Mast section carrier				
3	Sledge handle, 32 in. lg				
5	Guy Stake GP–113/G:				
1	Stake carrier				
1	Hammer, 8 lb				
4	Stake GP–2				
1	Accessories Case CY–1392/G	11⅛	17¼	19⅞	126 (with contents).
1	Mast base				
5	Guy MX–1484/G (70 ft)				
4	Guy MX–1483/G (58 ft)				
4	Guy MX–1483/G (50 ft)				
7	Reel				
2	Guy rope				
5	Guy attachment plate				
5	Guy plate				
1	Gin pole cap				
1	Block and tackle				
1	Erection construction chart				
2	Tape TL–83				
2	Tape TL–192				
4	Radio Frequency Cable Assembly CG–1030/U (80 ft).				
2	Cable Reel RC–404/TR	26¼	14⅜	26¼	112 (with cable).

(6) *Components of Amplifier Group OA–1392/GRC.*

Quantity	Item	Height (in.)	Depth (in.)	Width (in.)	Unit weight (lb)
1	Electrical Standardized Components Case CY–1338/TRC.	18⅜	17⅛	20⅝	39 (with contents).
1	Radio Frequency Amplifier AM–912/TRC	6 3/16	15 5/16	11 15/16	
1	Radio Frequency Amplifier-Converter AM–913/TRC.				
1	Circuit label book				

(7) *Components of Antenna-Filter Group OA–1393/GRC.*

Quantity	Item	Height (in.)	Depth (in.)	Width (in.)	Unit weight (lb)
1	Antenna Case CY–1371/TRC	90½	17	29	92 (with contents).
1	Antenna AS–639/TRC				
6	Antenna Dipole AT–412/TRC				
2	Radio Frequency Cable Assembly CG–1042/U (3 ft 5 in.).				
2	Adapter UG–643/U				
1	Filter Kit MK–123/TRC:				
1	Accessories Case CY–1344/TRC	18¼	12¼	20½	150 (with contents).
1	Band Pass Filter F–192/U				
1	Band Pass Filter F–193/U				
1	Band Pass Filter F–194/U				
1	Band Pass Filter F–195/U				
1	Band Pass Filter F–196/U				
1	Band Pass Filter F–197/U				

(8) *Components of Amplifier Group OA–1394/GRC.*

Quantity	Item	Height (in.)	Depth (in.)	Width (in.)	Unit weight (lb)
1	Electrical Standardized Components Case CY–1338/TRC.	18⅜	17⅛	20⅝	39 (with contents).
1	Amplifier-Converter AM–914/TRC	6⅜	11	7$^{3}/_{16}$	
1	Radio Frequency Amplifier-Multiplier AM–915/TRC or AM–915A/TRC.	6$^{3}/_{16}$	15$^{5}/_{16}$	11$^{15}/_{16}$	
1	Circuit label book				

(9) *Components of Antenna-Filter Group OA–1395/GRC.*

Quantity	Item	Height (in.)	Depth (in.)	Width (in.)	Unit weight (lb)
1	Antenna Case CY–1370/TRC	9½	21⅜	24⅞	66 (with contents).
1	Antenna AS–640/TRC				
6	Antenna Dipole AT–413/TRC				
2	Radio Frequency Cable Assembly CG–1042/U (3 ft 5 in.).				
2	Adapter UG–643/U				
1	Filter Kit MK–124/TRC:				
1	Accessories Case CY–1344/TRC	18¼	12¼	20½	150 (with contents).
1	Band Pass Filter F–199/U				
1	Band Pass Filter F–200/U				
1	Band Pass Filter F–201/U				
1	Band Pass Filter F–202/U				
1	Band Pass Filter F–203/U				
1	Band Pass Filter F–204/U				

Page 35, paragraph 24*c*, line 7. Delete "Plug Connector UG–707/U" and substitute "Plug Connector UG–573/U."

Page 92, paragraph 67*b*(3). Delete the caution and substitute:

Caution: If the swivel is not positioned properly or if the wrong tube is used as the gin pole tube, the casting that joins the MAST tube and the GIN POLE tube to the swivel will be twisted and the swivel bent. To avoid damaging these parts, position the swivel, the MAST tube, and the GIN POLE tube as shown in figure 79.

Page 100.

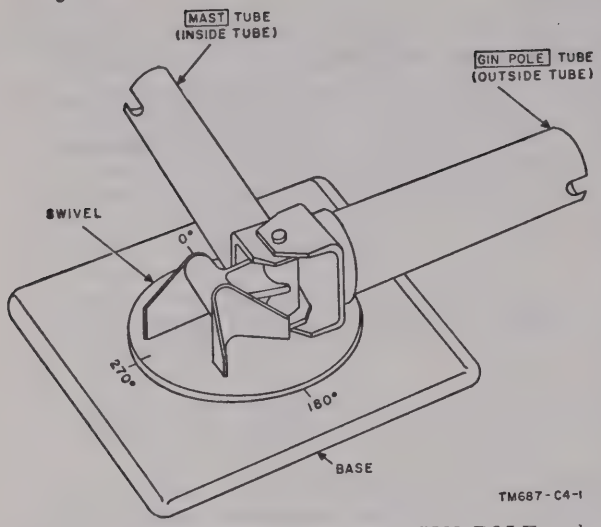

Figure 79. (Superseded) *Position of GIN POLE and MAST tubes for gin pole cap attachment.*

Page 135, paragraph 105*a*(18). Make the following changes:

Line 6. Change "approximately 25 μa" to **less than 29 μa.**

Line 7. Change "GRID" to **CATH.**

Lines 10 and 11. Change "27.5 μa" to **29 μa.**

Line 13. Change "25 μa" to **less than 29 μa.**

Page 136, paragraph 105*b*(23). Make the following changes:

Lines 8 and 14. Change "approximately 22 μa" to **less than 29 μa.**

Line 11. Change "25 μa" to **29 μa.**

Page 147, paragraph 121*b*. "Normal indication on meter" column. Make the following changes:

Opposite the "PWR AMPL GRID" position, change "20–40 μa" to **20–50 μa.**

Opposite the "PWR AMPL CATH" position, change "27.5 μa" and "25 μa" to **29 μa.**

Page 174, paragraph 144.

c. (Added) The Snubit guy tightening devices, which are part of Guys MX–1483/G (50 ft), MX–1483/G (58 ft), MX–1483/G (75 ft), and MX–1484/G (70 ft), rust and corrode, particularly those on the earlier sets. Rusting will cause considerable discoloration but will not seriously damage or cause the affected parts to fail. As a preventive measure, apply moistureproof and fungusproof varnish (Sig C stock No. 6G2199).

Page 187, paragraph 155*c*. After subparagraph *c*, add the following note:

Note. The Cam-Lock fasteners on the earlier sets (corrected on the later models) become loose and drop out after one or two insertions. To prevent this, place a split washer behind the lockwasher on the spring cup and grommet assembly. The split washer should have an inside diameter slightly smaller than the retaining pin on the spring cup and grommet assembly.

Page 195, paragraph 179. Under Item No. 30, in the "Corrective measures" column, and after "Replace lamp," add "See paragraph 179.1."

Page 202.

179.1. Checking Overcurrent Trip Adjustment (Added)

If 750V DC lamp I 1 goes off because overload relay K4 operates, follow the procedure below.

Warning: Improper adjustment on R1 can nullify the protection against overloads afforded by the overload relay K4, and may result in extensive damage to the transmitter and transmitter power supply should an overload occur.

a. Turn 115V AC switch CB1 of PP–685/TRC to OFF; then turn to ON again to reset overload relay K4.

b. If relay K4 operates, extinguishing the 750V DC lamp, turn the 750V ADJ switch of PP–685/TRC to position 1.

(1) If relay K4 holds with the switch in position 1, proceed to *c* below.

(2) If relay K4 operates, a short circuit is present in the 750-volt circuit of the transmitter, transmitter tuner, or transmitter power supply. Follow the troubleshooting procedures to clear the trouble.

c. Turn the 750V ADJ switch to position 2.

(1) If relay K4 holds, proceed to *d* below.

(2) If relay K4 operates, turn 115V AC switch CR1 to OFF; then turn to ON again to reset overload relay K4. If K4 continues to operate, and if either the transmitter or the transmitter tuner have not been used for several weeks, or if a 4X150A or 4X150G tube has been replaced with a spare tube, the overload may be caused by a gassy tube of these types. Gassy power tubes can often be rejuvenated by operating them for 1 hour or more at reduced plate voltages. Turn the 750V ADJ switch to position 1 and permit the transmitter to operate at low voltage from 1 to 8 hours, as required; then repeat the procedure in this subparagraph. If the condition is not corrected within 8 hours, check for shorts in the 750-volt circuits, and check for defective 4X150A or 4X150G tube.

d. If the 750V DC lamp remains lighted with the 750V ADJ switch on position 2, turn the 750V ADJ switch to the position specified by the standard tuning procedure (par. 105). If relay K4 operates, repeat the procedure in *c* above, but with the 750V ADJ switch on the highest position at which the 750V DC lamp will remain lighted.

e. If K4 continues to operate after it has been determined that no shorts exist in the 750-volt circuits of the transmitter, transmitter tuner, or transmitter power supply, overload relay adjust resistor R1 may be improperly adjusted. In such a case, return the radio transmitter, transmitter tuner, and transmitter power supply to the third echelon maintenance for adjustment or repair.

f. Use the following emergency procedure for adjusting R1 only when adjustment by third echelon maintenance is not practicable.

(1) Slide the power supply about 4 inches out of the transit case. Loosen the knurled locknut on R1 ¼-turn counterclockwise.
(2) Mark the position of the screwdriver slot by means of a pencil mark on the locknut.
(3) Turn R1 to its extreme clockwise position and mark the position of the screwdriver slot by means of a pencil mark on the locknut.
(4) Turn the radio transmitter on in accordance with the standard procedure.
(5) When the 750V DC lamp lights, slowly turn R1 counterclockwise until the lamp is extinguished.
(6) Turn R1 a few degrees clockwise. Turn 115V AC circuit breaker CB1 to OFF and then to ON again to reset the overload relay.
(7) If the overload relay continues to operate, repeat the procedure in (6) above until the overload relay is no longer triggered by the normal load.
(8) Note the position of the screwdriver slot of R1. It should be at least 30° from the mark made in the procedure in (3) above to insure that some overload protection is afforded.

Note. Use of the above procedure will permit operation of the transmitter under emergency conditions. As soon as conditions warrant, R1 should be readjusted by the third echelon maintenance to insure that the overload protection circuits are fully effective.

Page 280, paragraph 281.

c. (Added) In receivers on Order No. 32146-Phila-51, serial numbers 1650 and above, and on Order No. 50972-Phila-57, an rf filter has been added in the +150V lead to the if amplifier unit. This filter consists of a 14-mh choke, L140 (connected in the B+ lead between the junction of resistors R125 and R133 and the junction of capacitor C173 and the B+ lead), and a 4700-uuf capacitor, C296 (connected from the junction of L140 and R133 to ground). The connection of R150 to the B+ lead has been moved to the junction of L140 and C296.

Page 317, paragraph 315. Delete symptom 27 and substitute:

Symptom	Probable trouble	Correction
27. 750V DC lamp I 1 extinguished.	Temporary current overload exists in transmitter.	Turn 115V AC switch CB1 to OFF, then turn to ON again to reset overload-relay.
	Continuous current overload exists in transmitter.	Check for shorts in 750-volt circuits of transmitter and transmitter tuners (par. 179.1).
	Overload current adjust resistor R1 of PP-685/TRC improperly adjusted.	Adjust R1 (par. 179.1).

Page 330, figure 200. Add the following note:

7. ON ORDER NO. 50972-PHILA-57 ONLY, MEASUREMENTS AT PIN 1 OF V105 ARE −4.5V and 1.82 MEG.

Page 448, paragraph 370*h*.

h. (Superseded) *Checking Overcurrent Trip Adjustment.* The 750-volt transmitter circuits should be replaced by connecting a variable resistive load (about 2,000 ohms and 15 watts) in series with a suitable ammeter. Use the following procedure:

(1) Slide the power supply about 4 inches out of the transit case.
(2) Turn the DC TEST switch of the power supply to the 750 position.

(3) Connect the variable resistive load and the ammeter between pins H and N of J3. Adjust the variable resistor for maximum resistance.
(4) Loosen the knurled locknut on R1. Turn R1 to its extreme clockwise position.
(5) Turn the power supply on.
(6) Adjust the 750V ADJ control for a 750 volt reading on the meter.
(7) Adjust the variable load resistor for a reading of .5 ampere on the ammeter.
(8) Slowly turn R1 counterclockwise until relay K4 operates. R1 is now properly adjusted.

Page 461, figure 276 (in separate envelope), NOTE 20 (Page 10 of C1). After ORDER NO. 16811-PHILA-51 insert: ON ORDER NO. 32146-PHILA-51, SERIAL NUMBERS 1650 AND ABOVE, AND ORDER NO. 50872-PHILA-57.

Page 465, figure 281 (in separate envelope). Add the following note:

10. IN STATION 7, INTERCHANGE THE DESIGNATIONS R201 and R202. LEAD TERMINAL NUMBER 4 (WH–BLU) SHOULD BE SHOWN CONNECTED TO THE BOTTOM TERMINAL OF S107 INSTEAD OF THE TOP.

Figure 302, (in separate envelope). Add the following note:

18. ON ORDER NO. 32146-PHILA-51, SERIAL NUMBERS 1650 AND ABOVE, AND ALSO ON ORDER NO. 50972-PHILA-57, L140 and C296 HAVE BEEN ADDED. REMOVE THE STRAP WIRE FROM BETWEEN TERMINALS 1 AND 2 OF TB105, AND INSERT L140. ADD C296 FROM TERMINAL 2 OF TB105 TO THE GROUND LUG OF Z106.

[AG 413.44 (30 Apr 58)]

By Order of *Wilber M. Brucker*, Secretary of the Army:

MAXWELL D. TAYLOR,
General, United States Army,
Chief of Staff.

Official:
HERBERT M. JONES,
Major General, United States Army,
The Adjutant General.

Distribution:
Active Army:

ASA (2)
CNGB (1)
Technical Stf, DA (1) except CSigO (30)
Technical Stf Bd (1)
USA Arty Bd (1)
USA Armor Bd (1)
USA Inf Bd (1)
USA Air Def Bd (1)
USA Abn & Elct Bd (1)
USA Avn Bd (1)
USA Armor Bd Test Sec (1)
USA Air Def Bd Test Sec (1)
USA Arctic Test Bd (1)
USCONARC (5)
US ARADCOM (2)
OS Maj Comd (5)
Log Comd (5)
MDW (1)
Armies (5)
Corps (2)
USA Corps (Res) (1)
Div (2)
USATC (2)
Ft & Camps (2)
Svc Colleges (5)
Br Svc Sch (5) except USASCS (25) except USASCS (Ft Monmouth) (310), USASESCS (300)
Gen Depots (2) except Atlanta Gen Depot (None)
Sig Sec, Gen Depots (10)
Sig Depots (17)
Fld Comd, AFSWP (5)
Engr Maint Cen (1)
Army Pictorial Cen (2)
WRAMC (1)
AFIP (1)
AMS (1)
Port of Emb (OS) (2)
Trans Terminal Comd (2)
Army Terminals (2)
OS Sup Agcy (2)
USA Sig Pub Agcy (8)
USA Sig Comm Engr Agcy (1)
USA Comm Agcy (2)
TASSA (13), Chicago Rgn Ofc (1)
USA Sig Eqp Spt Agcy (2)
USA White Sands Sig Agcy (13)
USA Sig Sv Team (1)
Yuma Test Sta (2)
USA Elct PG (1)
Sig Fld Maint Shops (3)
Sig Lab (5)
Mil Dist (1)
Sectors, USA Corps (Res) (1)
JBUSMC (2)
Units organized under following TOE's:
11–7
11–15
11–16
11–18
11–57
11–95
11–98
11–117
11–127
11–128
11–500 (AA–AE)
11–557
11–587
11–592
11–597
39–61

NG: State AG (6); units—same as Active Army except allowance is one copy to each unit.
USAR: None.
For explanation of abbreviations used, see AR 320–50.

U. S. GOVERNMENT PRINTING OFFICE: 1958

DEPARTMENT OF THE ARMY TECHNICAL MANUAL
DEPARTMENT OF THE AIR FORCE TECHNICAL ORDER

TM 11-687
TO 31R2-2TRC24-11
C 5

RADIO SETS AN/TRC-24, AN/GRC-75, AN/GRC-78, AND AN/GRC-81, RADIO TERMINAL SETS AN/TRC-35, AN/GRC-76, AN/GRC-79, AND AN/GRC-82, AND RADIO RELAY SETS AN/TRC-36, AN/GRC-76, AN/GRC-80, AND AN/GRC-83

TM 11-687
TO 31R2-2TRC24-11
CHANGES No. 5

DEPARTMENTS OF THE ARMY
AND THE AIR FORCE
WASHINGTON 25, D. C., *7 November 1958*

TM 11-687/TO 31R2-2TRC24-11, 14 September 1955, is changed as indicated so that the manual also applies to the following equipment:

Nomenclature	*Order No.*	*Serial No.*
Radio Set	47538-Phila-56	All
AN/GRC-75	08720-Phila-55	All
Radio Terminal Set	47538-Phila-56	All
AN/GRC-76	08720-Phila-55	All
Radio Relay Set	47538-Phila-56	All
AN/GRC-77	08720-Phila-55	All
Radio Set	47538-Phila-56	All
AN/GRC-78	08720-Phila-55	All
Radio Terminal Set	47538-Phila-56	All
AN/GRC-79	08720-Phila-55	All
Radio Relay Set	47538-Phila-56	All
AN/GRC-80	08720-Phila-55	All

Change the title to the manual to read: **RADIO SETS AN/TRC-24, AN/GRC-75, AN/GRC-78, AND AN/GRC-81, RADIO TERMINAL SETS AN/TRC-35, AN/GRC-76, AN/GRC-79, AND AN/GRC-82, AND RADIO RELAY SETS AN/TRC-36, AN/GRC-76, AN/GRC-80, AND AN/GRC-83.**

Note. A parenthetical reference to previous changes (example: page 2 of C 2) indicates that pertinent material was published in that change.

Page 3, paragraph 3*a*. Delete the second sentence.

Page 10, paragraph 5. Make the following changes:

In subparagraph *a* delete items "Frequency range" and "Number of tubes" and substitute:

Frequency range——50 to 100 mc in 200 discrete rf channels with Radio Frequency Amplifier AM-1180/GRC (band A).
100 to 225 mc in 250 discrete rf channels with Radio Frequency Amplifier AM-912/TRC (band B).
225 to 400 mc in 175 discrete rf channels with Radio Frequency Amplifier-Multiplier AM-915/TRC (band C).
400 to 600 mc in 133 discrete rf channels with Radio Frequency Amplifier- Multiplier AM-1178/GRC (band D).

Number of tubes——26 (with AM-1180/GRC or AM-912/TRC).
27 (with AM-915/TRC or AM-1178/TRC).

In subparagraph *c* delete items "Frequency range" and "Number of tubes" and substitute:

Frequency range——Continuous 50 to 100 mc with Amplifier-Converter AM-1179/GRC (band A).
Continuous 100 to 225 mc with Amplifier-Converter AM-913/TRC (band B).
Continuous 225 to 400 mc with Amplifier-Converter AM-914/TRC (band C).
Continuous 400 to 600 mc with Amplifier-Converter AM-1177/GRC (band D).

Number of Tubes——31 (with AM-1179/GRC).
30 (with AM-913/TRC).
33 (with AM-914/TRC).
32 (with AM-1177/GRC).

In subparagraph *e* delete items "Type," "Operating frequency," "Antenna beam width," "Gain," and "Weight," and substitute:

Type——Two 3-element Yagi arrays, Antenna AS-756/GRC (band A).
Two half-wave dipoles with plane reflector, Antenna AS-639/TRC (band B).

	Two half-wave dipoles with plane reflector, Antenna AS–640/TRC (band C).
	Four half-wave dipoles with plane reflector, Antenna AS–755/GRC (band D).
Operating frequency	50 to 100 mc (with AS–756/GRC).
	100 to 250 mc (with AS–639/TRC).
	250 to 400 mc with AS–640/TRC).
	400 to 600 mc (with AS–755/GRC).
Antenna beam width	25° to 120°, depending on frequency and polarization.
Gain	5 to 10 db, depending on frequency.
Weight	55 pounds (AS–756/GRC).
	143 pounds (AS–639/TRC, AS–640/TRC, or AS–755/GRC).

Page 11, paragraph 6*b*(3). Delete the fifth sentence and substitute: This carton is covered with a moisture-vaporproof barrier material.

Page 12 (page 1 of C 4). Delete paragraph 7 and substitute:

7. Components

a. General. The components comprising the various types of radio, terminal, and repeater sets have been separated into major nomenclatured groups. These nomenclatured groups in turn are divided into nomenclatured components. The table in *b* below lists the major groups forming radio, terminal, and relay sets operating in the A, B, C, and D bands. The components that form each of the major groups are covered in *c* below.

b. Table of Major Groups.

Major group	Quantity required											
	B and C bands			A band			B and D bands			C band		
	Radio Set AN/TRC–24	Radio Terminal Set AN/TRC–35	Radio Relay Set AN/TRC–36	Radio Set AN/GRC–75	Radio Terminal Set AN/GRC–76	Radio Relay Set AN/GRC–77	Radio Set AN/GRC–78	Radio Terminal Set AN/GRC–79	Radio Relay Set AN/GRC–80	Radio Set AN/GRC–81	Radio Terminal Set AN/GRC–82	Radio Relay Set AN/GRC–83
Radio Set Group OA–1387/GRC.	1	2	3	1	2	3	1	2	3	1	2	3
Power Accessories Group OA–1676/GRC.	1	1	1	1	1	1	1	1	1	1	1	1
Generator Set Group OA–1675/GRC.	1	1	1	1	1	1	1	1	1	1	1	1
Antenna Group OA–1389/GRC.	1	1	2				1	1	2	1	1	2
Antenna Accessories Group OA–1398/GRC.	1	1	2	1	1	2	1	1	2	1	1	2
Amplifier Group OA–1390/GRC.				1	2	3						
Antenna-Filter OA–1391/GRC.				1	1	2						
Amplifier Group OA–1392/GRC.	1	2	3				1	2	3			
Antenna-Filter Group OA–1393/GRC.	1	1	2				1	1	2			
Amplifier Group OA–1394/GRC.	1	2	3							1	2	3
Antenna-Filter Group OA–1395/GRC.	1	1	1							1	1	2
Amplifier Group OA–1396/GRC.							1	2	3			
Antenna-Filter Group OA–1397/GRC.							1	1	2			

c. Table of Components. The tables in subparagraphs (1) through (13) below indicate the components forming all the major groups that were listed in the table of *a* above.

(1) *Components of Radio Set Group OA–1387/GRC.*

Quantity	Item	Height (in.)	Depth (in.)	Width (in.)	Unit Weight (lb)
1	Transmitter assembly:				
1	Transmitter Case CY–1341/TRC	18½	22	20⅝	120.75 (with contents).
1	Radio Transmitter T–302/TRC				
1	Dummy filter				
1	Circuit label book				
1	Receiver assembly:				
1	Receiver Case CY–1339/TRC	17⅛	18¼	20⅝	96.5 (with contents).
1	Circuit label book				
1	Radio Receiver R–417/TRC				
1	Dummy filter				
1	Power supply assembly:				
1	Power Supply Case CY–1340/TRC	17⅛	18⅜	20⅝	115 (with contents).
1	Power Supply PP–685/TRC				
1	Circuit label book				
1	Accessories Kit MK–133/TRC:				
2	Accessories Case CY–1342/TRC	18⅝	20⅝	21½	94 (with contents).
2	Technical manual 11–687				
1	Capacitor CPO5A1EC104K				
1	Resistor RS42GF131J				
1	Crystal rectifier 1N21B				
	Crystal rectifier 1N69				
3	Incandescent lamp				
12	Fuse FO2G1ROOA				
6	Fuse FO2D1R50B				
6	Fuse FO2G3ROOA				
6	Fuse FO2GR500A				
6	Fuse FO9G5ROOA				
6	Fuse FO9G1OROA				
6	Fuse FO9G20ROA				
12	Fuse FO2GR500B				
1	Handset H–90/U				
1	Electron tube 5879				
4	Electron tube 6CB6				
1	Electron tube 6AU6				
6	Electron tube 5670				
2	Electron tube 5751				
2	Electron tube 6AN5				
6	Electron tube 5654/6AK5W				
1	Electron tube 5725/6AS6W				
1	Electron tube 5726/6AL5W				
5	Electron tube 6J4				
1	Electron tube 5933				
4	Electron tube 5998				
2	Electron tube 5R4WGY				
1	Electron tube 836				
3	Electron tube 4X150A				
2	Electron tube 4X150G				
1	Electron tube 0A3				
1	Incandescent lamp 50 w, 120 v				
1	Trouble lamp				
1	Screwdriver TL–360/U				
1	Telephone Cable Assembly CX–1512/U (12').				

Quantity	Item	Height (in.)	Depth (in.)	Width (in.)	Unit Weight (lb)
1	Electrical Power Cable Assembly CY–2257/U (10′).				
	Radio Frequency Cable Assembly CG–1031/U (6″).				
	Electrical Power Cable Assembly CY–2256/U (3′).				
	Electrical Power Cable Assembly CY–2258/U (8′).				
1	Electrical Special Purpose Cable Assembly CY–2252/U (6′).				
1	Electrical Special Purpose Cable Assembly CY–2253/U (4′).				
1	Fixed Autotransformer Power Transformer TF–179/U.				

(2) *Components of Generator Set Group OA–1675/GRC.*

Quantity	Item	Height (in.)	Depth (in.)	Width (in.)	Unit Weight (lb)
2	Generator Set PU–286				
2	Ground Rod MX–148/G				
2	Gasoline spouts				
10	Gasoline drums				
1	Electrical Power Cable Assembly CX–2251/U (150 ft)				
2	Electrical Power Cable Assembly CX–2254/U (10 ft).				
1	Cable Reel RC–405/TR				

(3) *Components of Power Accessories Group OA–1676/GRC.*

Quantity	Item	Height (in.)	Depth (in.)	Width (in.)	Unit Weight (lb)
1	Accessories Case CY–1343/TRC	18⅝	20⅝	21½	140 (with contents).
1	Wattmeter ME–82/U				
1	Interconnecting Box J–532/U				
1	Switch Box SA–331/U				
12	Fuse, 10 amp, F09G10RA				
1	Screwdriver TL–358/U				
1	Maintenance cable kit assembly:				
1	Radio Frequency Cable Assembly CG–718/U (5 ft).				
2	Electrical Special Purpose Cable Assembly CX–2406/U.				
1	Electrical Special Purpose Cable Assembly CX–2420/U.				
1	Electrical Special Purpose Cable Assembly CX–2473/U.				
2	Radio Frequency Cable Assembly CG–789/AU.				
1	Radio Frequency Cable Assembly CG–1091/U.				
1	Radio Frequency Cable Assembly CG–1103/U.				
1	Chassis assembly				

(4) *Components of Antenna Group OA–1389/GRC.*

Quantity	Item	Height (in.)	Depth (in.)	Width (in.)	Unit Weight (lb)
1	Antenna Reflector Case CY–1385/TRC	12½	33⅜	51¾	132 (with contents).
2	Antenna Reflector AT–414/TRC				
1	Antenna cradle				
1	Antenna Reflector Support Case CY–1387/TRC.	6½	30	33⅝	70 (with contents).
1	Antenna Reflector Support AB–325/TRC				
4	Guy MX–1483/G (75 ft)				
2	Reflector shackle assembly				
2	Reel assembly				
4	Anchor shackle assembly				
6	Cable clamp				
1	Wrench, $\frac{9}{16}$-in. and ½-in.				
1	Wrench, ⅞-in.				
1	Wrench, ½-in., ⅜-in. drive				
1	Wrench, $\frac{9}{16}$-in., ⅜-in. drive				

(5) *Components of Antenna Accessories Group OA–1398/GRC.*

Quantity	Item	Height (in.)	Depth (in.)	Width (in.)	Unit Weight (lb)
1	Mast AB–235/G				
15	Mast Section AB–332/G				
3	Mast section carrier				
3	Sledge handle, 32 in. lg.				
5	Guy Stake GP–113/G				
1	Stake carrier				
1	Hammer, 8 lb				
4	Ground Stake GP–2				
1	Accessories Case CY–1392/G	11⅛	17¼	19⅞	126 (with contents).
1	Mast base				
5	Guy MX–1484/G (70 ft)				
4	Guy MX–1483/G (58 ft)				
4	Guy MX–1483/G (50 ft)				
7	Reel				
2	Guy rope				
5	Guy attachment plate				
5	Guy plate				
1	Gin pole cap				
1	Block and tackle				
1	Erection construction chart				
2	Tape TL–83				
2	Tape TL–192				
4	Radio Frequency Cable Assembly CG–1030/U (80 ft).				
2	Cable Reel RC–404/TR				

(6) *Components of Amplifier Group OA–1390/GRC.*

Quantity	Item	Height (in.)	Depth (in.)	Width (in.)	Unit Weight (lb)
1	Amplifier-Converter AM–1179/GRC including:				
	Crystal CR–18/U–10 mc				
	Connector Adapter UG–491/U				
1	Radio Frequency Amplifier AM–1180/GRC				
1	Electrical Standardized Components Case CY–1338/TRC.	18⅜	17⅛	20⅝	39 (with contents).
1	Circuit label book				

(7) *Components of Antenna Filter OA–1391/GRC.*

Quantity	Item	Height (in.)	Depth (in.)	Width (in.)	Unit Weight (lb)
1	Antenna Case CY–1760/GRC	10	19½	77½	160 (with contents).
1	Antenna AS–756/GRC				
3	Antenna boom				
1	Array spacer bar				
18	Fixed dipole elements				
18	Short dipole inserts				
18	Long dipole inserts				
1	A-band antenna mast stand				
2	Cable clamp				
1	Wrench, open end, ⅞ in.				
4	Adaptor UG–643/U				
1	Wrench, spin-type, $\frac{9}{16}$ in.				
1	Filter Kit MK–236/TRC:				
	Band Pass Filter F–238/U				
	Band Pass Filter F–239/U				
	Band Pass Filter F–240/U				
	Band Pass Filter F–241/U				
1	Band Pass Filter F–242/U				
1	Band Pass Filter F–243/U				
1	Accessories Case CY–1344/TRC				

(8) *Components of Amplifier Group OA–1392/GRC.*

Quantity	Item	Height (in.)	Depth (in.)	Width (in.)	Unit Weight (lb)
1	Electrical Standardized Components Case CY–1338/TRC.	18⅜	17⅛	20⅝	39 (with contents).
1	RF Amplifier AM–912/TRC	$6\frac{3}{16}$	$15\frac{5}{16}$	$11\frac{15}{16}$	
1	Amplifier-Converter AM–913/TRC				
1	Circuit label book				

(9) *Components of Antenna-Filter Group OA–1393/GRC.*

Quantity	Item	Height (in.)	Depth (in.)	Width (in.)	Unit Weight (lb)
1	Antenna Case CY–1371/TRC	9½	17	29	92 (with contents).
1	Antenna AS–639/TRC				
6	Antenna Dipole AT–412/TRC				
2	Radio Frequency Cable Assembly CG–1042/U (40 in.).				
2	Adapter UG–643/U				
1	Filter Kit MK–123/TRC:				
1	Accessories Case CY–1344/TRC	12¼	18¼	20¾	70 (with contents).
1	Band Pass Filter F–192/U				
1	Band Pass Filter F–193/U				
1	Band Pass Filter F–194/U				
1	Band Pass Filter F–195/U				
1	Band Pass Filter F–196/U				
1	Band Pass Filter F–197/U				

(10) *Components of Amplifier Group OA–1394/GRC.*

Quantity	Item	Height (in.)	Depth (in.)	Width (in.)	Unit Weight (lb)
1	Electrical Standardized Components Case CY–1338/TRC.	18⅜	17⅛	20⅝	39 (with contents).
1	Amplifier-Converter AM–914/TRC	6⅜	11	$7\frac{3}{16}$	
1	Radio Frequency Amplifier-Multiplier AM–915/TRC.	$6\frac{3}{16}$	$15\frac{5}{16}$	$11\frac{15}{16}$	
1	Circuit label book				

(11) *Components of Antenna-Filter Group OA–1395/GRC.*

Quantity	Item	Height (in.)	Depth (in.)	Width (in.)	Unit Weight (lb)
1	Antenna Case CY–1370/TRC	9½	21⅜	24⅞	66
1	Antenna AS–640/TRC				
6	Antenna Dipole AT–413/TRC				
2	Radio Frequency Cable Assembly CG–1042/U (40 in.).				
2	Adapter Connector UG–643/U				
1	Filter Kit MK–124/TRC:				
1	Accessories Case CY–1344/TRC	12¼	18¼	20¾	70 (with contents).
1	Band Pass Filter F–199/U				
1	Band Pass Filter F–200/U				
1	Band Pass Filter F–201/U				
1	Band Pass Filter F–202/U				
1	Band Pass Filter F–203/U				
1	Band Pass Filter F–204/U				

(12) *Components of Amplifier Group OA–1396/GRC.*

Quantity	Item	Height (in.)	Depth (in.)	Width (in.)	Unit Weight (lb)
1	Electrical Standardized Components Case CY–1338/TRC.	18⅜	17⅛	20⅝	39 (with contents).
1	Radio Frequency Amplifier-Multiplier AM–1178/GRC.				
1	Amplifier-Converter AM–1177/GRC				
1	Cricuit label book				

(13) *Components of Antenna-Filter Group OA–1397/GRC.*

Quantity	Item	Height (in.)	Depth (in.)	Width (in.)	Unit Weight (lb)
1	Antenna Case CY–1761/GRC	10	20	25½	92 (with contents).
1	Antenna AS–755/GRC				
12	Antenna Element AT–566/GRC				
6	Radio Frequency Cable Assembly CG–1370/U (3 ft. 4 in.).				
4	Radio Frequency Cable Assembly CG–1544/U (2 ft. 2 in.).				
4	Adapter UG–643/U				
1	Filter Kit MK–2287GRC:				
1	Accessories Case CY–1344/TRC	12¼	18¼	20¾	60 (with contents).
1	Band Pass Filter F–233/U				
1	Band Pass Filter F–234/U				
1	Band Pass Filter F–235/U				
1	Band Pass Filter F–236/U				
1	Spares holder:				
1	Electron tube type 6AF4A				
1	Electron tube type 6AN4				
1	Electron tube type 5768				
1	Wrench, $\frac{5}{16}$ in.				

Page 15, paragraph 8, chart. Add the following to the chart:

Component	Common nomenclature used in text
Amplifier-Converter AM–1179/GRC.	Receiver A-band rf tuner.
Amplifier-Converter AM–913/TRC.	Receiver B-band rf tuner.
Amplifier-Converter AM–914/TRC.	Receiver C-band rf tuner.
Amplifier-Converter AM–1177/GRC.	Receiver D-band rf tuner.
Radio Frequency Amplifier AM–1180/GRC.	Transmitter A-band rf tuner.
Radio Frequency Amplifier AM–912/TRC.	Transmitter B-band rf tuner.
Radio Frequency Amplifier-Multiplier AM–915/TRC.	Transmitter C-band rf tuner.
Radio Frequency Amplifier-Multiplier AM–1178/GRC.	Transmitter D-band rf tuner.

Page 16, paragraph 9*a*(1), second sentence. Delete last part of sentence that reads: "but only the range from 100 to 400 mc is available now."

Page 19, paragraph 10: Make the following changes:

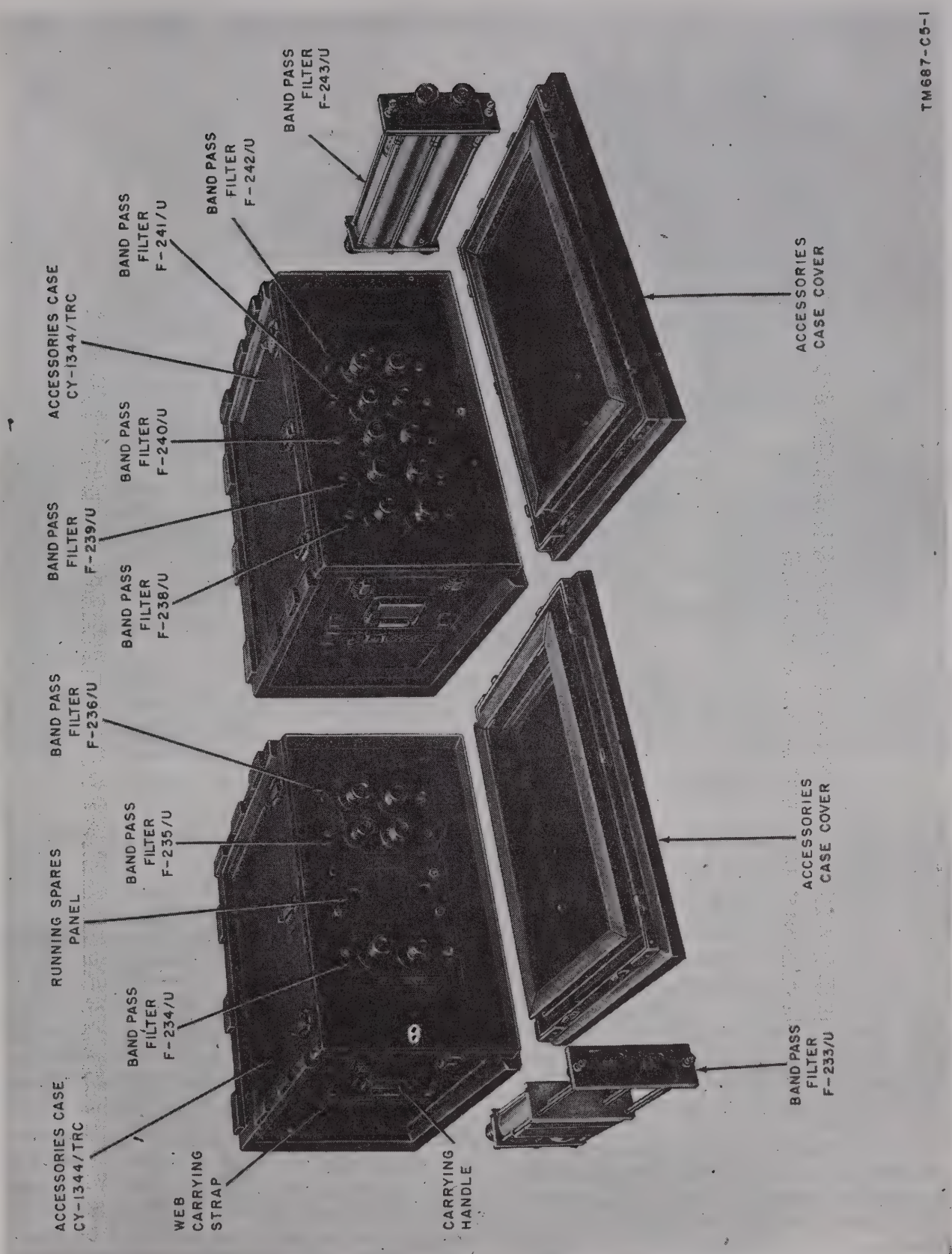

Figure 10.1. (Added) *Band-pass filters and accessories cases, bands D and A.*

Heading: Change "(fig. 10)" to: **(fig. 10 and 10.1).** Subparagraph *a.* Delete the first sentence and substitute:

Twenty-two band-pass filters are provided, which are nomenclatured F–192/U, through F–197/U, F–199/U through F–204/U, F–233/U through F–236/U, and F–238/U through F–243/U.

Line 6. Change "12" to: 22.

Page 20, paragraph 10*b.* Make the following changes:

Delete the second and third sentences and substitute: The 22 filters cover the frequency range from 50 to 600 mc. The range covered by each filter varies from approximately 8 mc at the low end of the band to approximately 50 mc at the high end.

Delete the last sentence and substitute: Figures 150 and 150.1 show simplified drawings of the band-pass filters with their mechanical and electrical features.

Page 21, figure 10. Caption, add: bands B and C.

Add paragraph 11.1 after paragraph 11:

11.1. Description of Radio Frequency Amplifier AM–1180/GRC

a. General. Radio Frequency Amplifier AM–1180/GRC (fig. 11.1) is a plug-in unit used in the transmitter for the A-band frequency range of 50 to 100 mc. This tuner also serves as an rf power amplifier. An air duct system is provided for cooling the vacuum tube (par. 9*a*(5)).

b. Front Panel. Two handles are provided on the front panel of the transmitter A-band rf tuner to remove the tuner from the transmitter or from the tuner case in which it is stored. Cam-lock fasteners secure the front panel of the tuner to the transmitter or to the tuner case. The controls and indicators of the transmitter A-band tuner are located on the front panel (fig. 87.1).

Paragraph 13*a.* Delete the fourth sentence and substitute: Output, dc power, and ac heater connections are provided in the tuner.

Page 22, figure 11. Caption, add: bands B and C.

Add paragraph 13.1 after paragraph 13:

13.1. Description of Radio Frequency Amplifier-Multiplier AM–1178/GRC

a. General. Radio Frequency Amplifier-Multiplier AM–1178/GRC (fig. 11.1) is a plug-in unit used in the transmitter for the D-band frequency range of 400 to 600 mc. This tuner consists of a frequency tripler and an rf amplifier, using coaxial cavity structures for the grid-tuned and plate-tuned circuits. Rf input, output, dc power, and ac heater connections are provided in the tuner. An air duct system for cooling the vacuum tubes is also provided (par. 9*a* (5)).

b. Front Panel. Two handles are provided on the front panel of the transmitter D-band rf tuner to remove the tuner from the transmitter or from the tuner case in which it is stored. Cam-lock fasteners secure the front panel of the tuner to the transmitter or to the tuner case. The controls and instruments of the D-band tuner are shown in figure 89.1.

Page 26, paragraph 15. Delete subparagraph *b* and substitute:

b. Antenna System. Two antennas are supplied with each radio terminal; one is for transmitting and one is for receiving. Each antenna is connected to the transmitter or receiver by coaxial rf cable (fig. 15). The A-band antenna (fig. 15.1) consists of a dipole radiator fed by a permanently installed matching transformer, a dipole director, and a dipole reflector, all mounted in a Yagi array. Several adjustments of the dipole lengths, and the spacings between director, radiator, and reflector are necessary to cover the frequency range from 50 to 100 mc. The antenna arrays may be used separately as a transmitting and a receiving antenna, or together as a stacked array. (Two sets of antenna arrays and two masts are required for stacked operation.) The antenna supplied for bands B, C, and D consist of a plane reflector and an antenna-reflector support (fig. 16), and dipoles. A pair of V-type dipoles is used for the B-band frequency range of 100 to 225 mc and a pair of rod-type dipoles is used for the C-band frequency range of 225 to 400 mc. Several adjustments of dipole lengths and dipole-reflector spacings are necessary to cover the frequency ranges. Two pairs of rod-type dipoles are used for the D-band frequency range of 400 to 600 mc. The dipoles are fixed in length and spacing

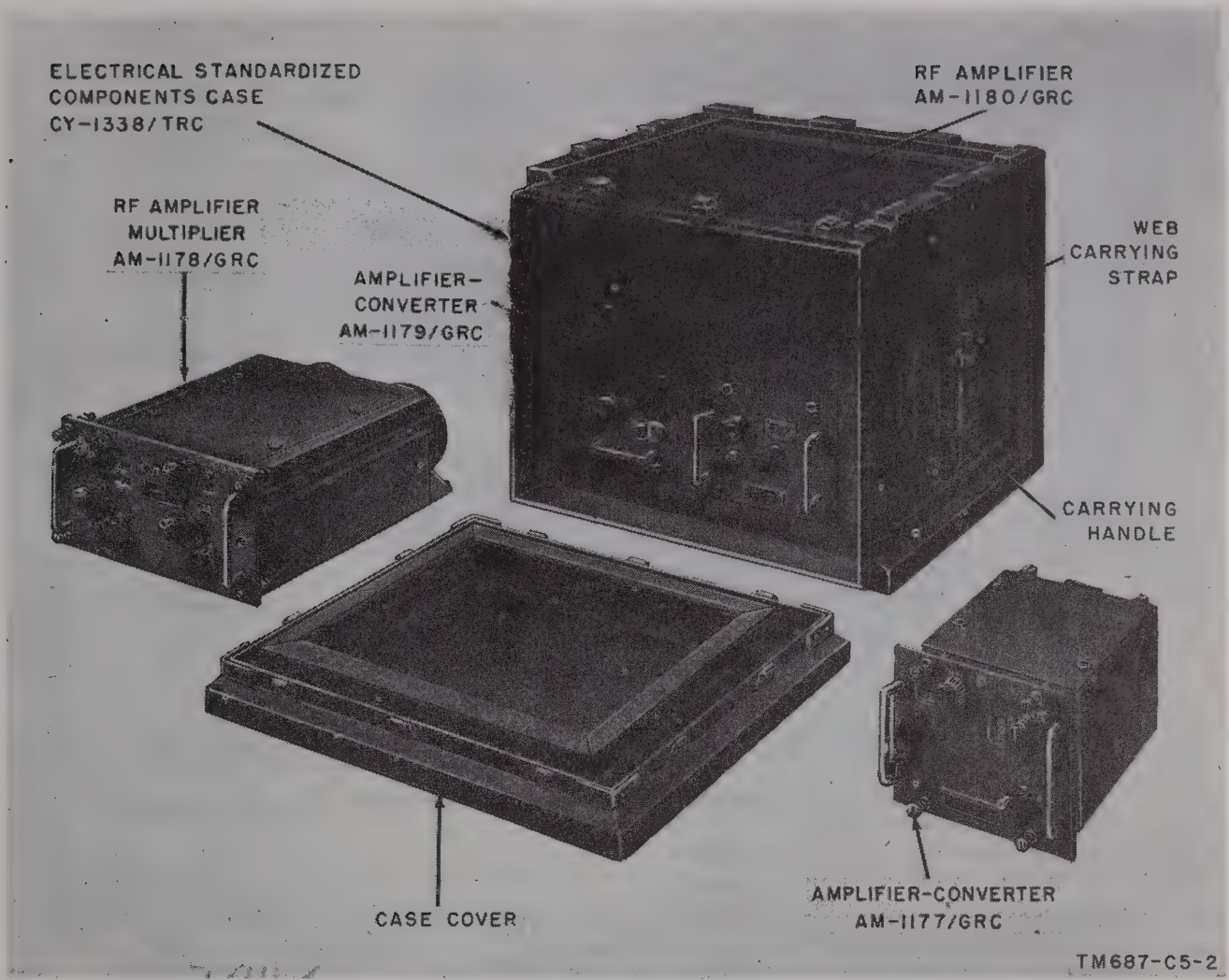

Figure 11.1. (Added) *Rf tuners and accessories case, bands A and D.*

and require no adjustment to cover the frequency range. Horizontal, vertical, and cross-polarization of both the transmitting and receiving antennas can be obtained by proper mounting of the antennas and reflectors on the antenna support.

Page 28, figure 17. Caption, add: bands B and C.

Paragraph 18*a*(1). Delete the last sentence and substitute: The receiver operates in the frequency range from 50 to 600 mc.

Page 31. Add paragraph 18.1 after paragraph 18:

18.1. Description of Amplifier-Converter AM–1179/GRC

a. General. Amplifier-Converter AM–1179/GRC is a plug-in unit that is used in the receiver for the A-band frequency range, 50 to 100 mc. This tuner consists of a tuned rf amplifier, a local-oscillator stage, a mixer, and an if preamplifier. The afc motor for afc control of the oscillator frequency also is contained in the receiver A-band rf tuner. The controls and instruments of this unit are shown in figure 93.1.

b. Front Panel. Two handles on the front panel of the receiver A-band rf tuner are used to remove the tuner from the receiver or from the tuner case. Cam-lock fasteners secure the front panel of this tuner to the receiver or to the tuner case in which it is stored. The controls and instruments are shown in figure 93.1.

Page 32, paragraph 19*a,* line 3. Change "B-band" to: **C-band.**

Page 33. Add paragraph 20.1 after paragraph 20:

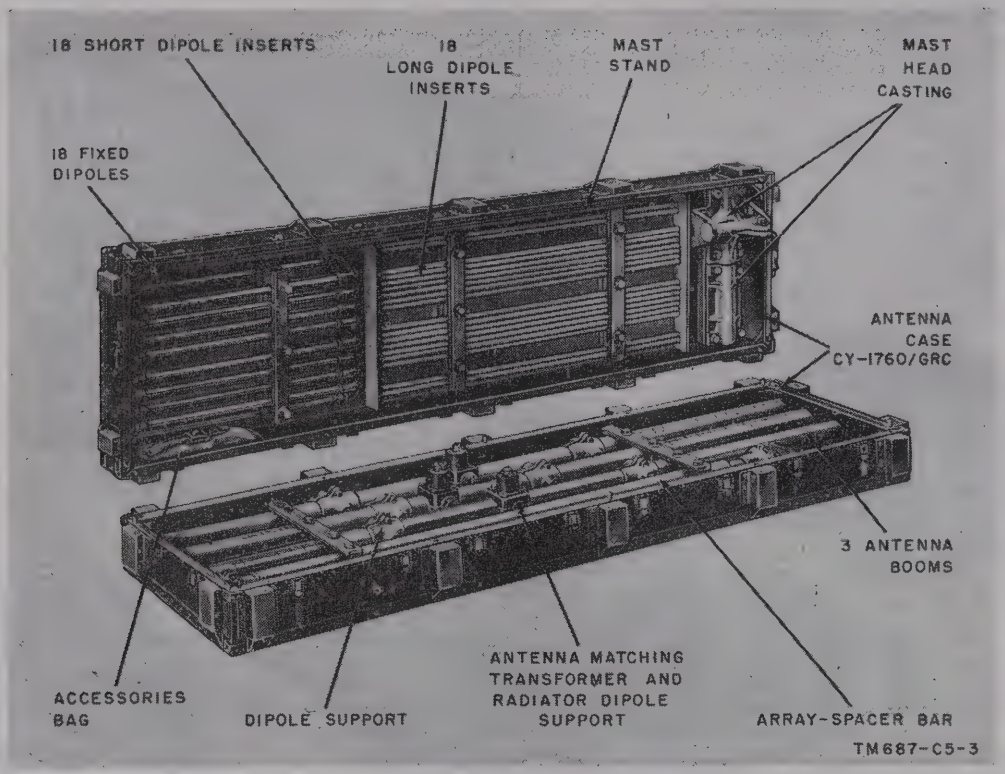

Figure 15.1. (Added) *Receiving and transmitting antenna elements, band A.*

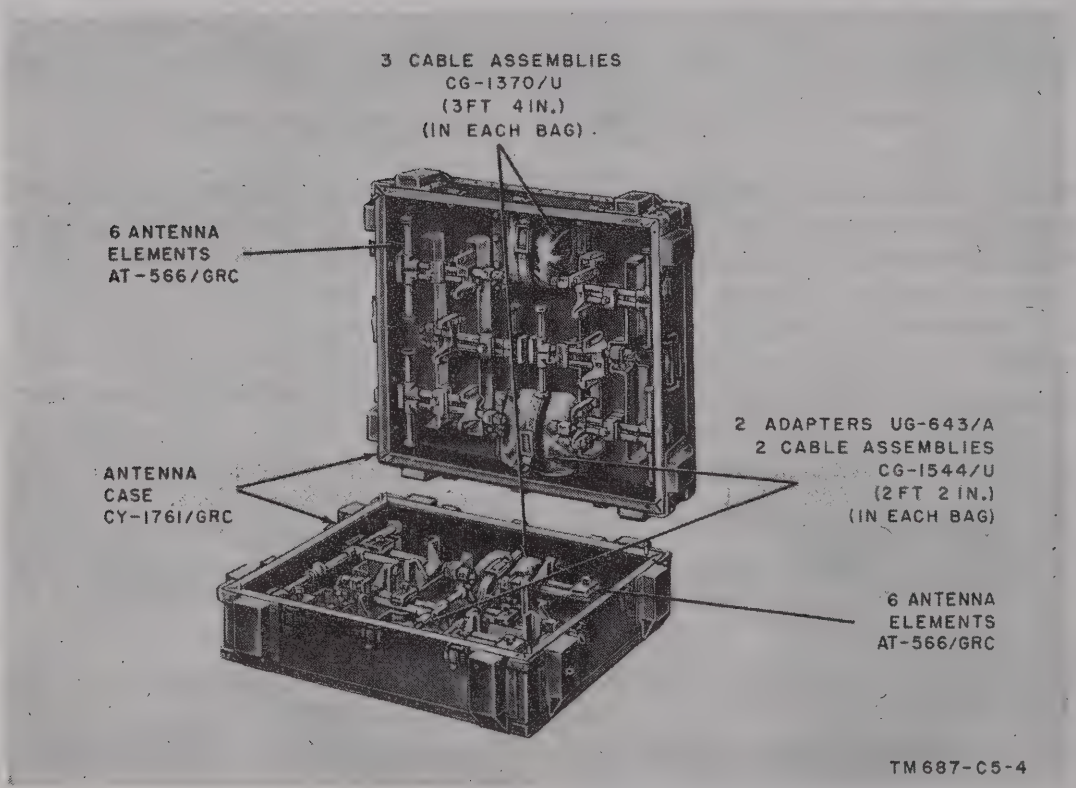

Figure 17.1. (Added) *Receiving and transmitting antenna elements, band D.*

20.1. Description of Amplifier-Converter AM–1177/GRC

a. General. Amplifier-Converter AM–1177/GRC is a plug-in unit that is used in the receiver for the D-band frequency range, 400 to 600 mc. This tuner consists of two stages of cascade rf amplification, a local-oscillator stage, and a mixer. The afc motor for afc control of the local-oscillator stage frequency also is contained in the receiver D-band rf tuner.

b. Front Panel. The front panel of the receiver D-band rf tuner has two handles to remove the tuner from the receiver or from the tuner case. Cam-lock fasteners secure the front panel of this tuner to the receiver or to the tuner case in which the tuner is stored. The controls and instruments are shown in figure 95.1.

Page 35, paragraph 24*b*. Delete the second sentence and substitute: This cable assembly has a three-terminal, waterproof female connector at one end that connects to the switch box, and three $\frac{3}{8}$-inch spade lugs at the other end that connect to the power source.

Page 39, paragraph 25*d*. Make the following changes:

Heading. Change "(fig. 10)" to: (fig. 10 and 10.1). Add after the last sentence:

A blank panel, with the D-band running spares mounted to the rear of it, is supplied in the D-band filter case and covers the two unused filter storage spaces. It is held in place by cam-lock fasteners.

Page 40, paragraph 25. Make the following changes: Subparagraph *h*. Add subparagraphs *h.1* and *h.2*.

h.1. Antenna Case CY–1760/GRC (fig. 15.1). This is a metal case designed to hold Antenna AS–756/GRC, including four Adapter Connectors UG–643A/U, two antenna cable clamps, and two wrenches. The case consists of two halves, one containing the antenna booms and the array-spacer bar and the other containing the mast head casting, the dipole elements and inserts, and the mast stand. The two halves of the case mate together by pins and are fastened with snap catches. The case has carrying handles on the ends.

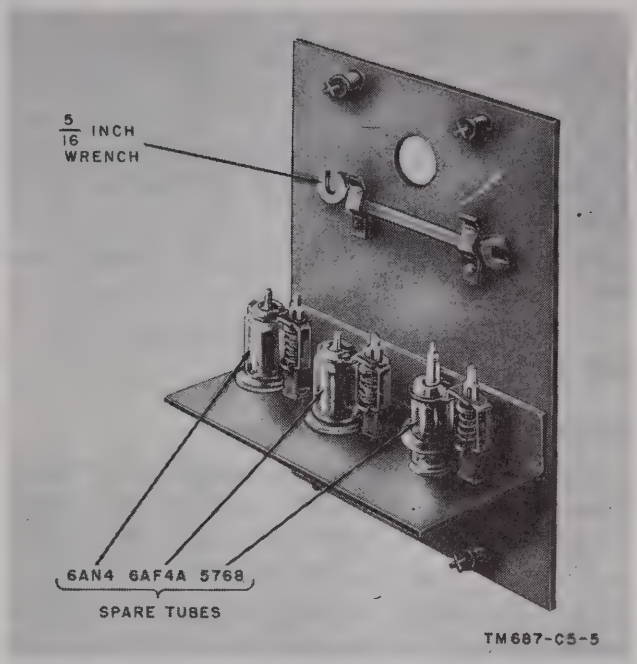

Figure 32.1. (Added) *Running spares panel in Accessories Case CY–1344/GRC.*

h.2. Antenna Case CY–1761/GRC (fig. 17.1). This is a metal case designed to hold Antenna AS–755/GRC and four Adapter Connectors UG–643A/U. The case consists of two halves, each of which contains one transmitting or receiving antenna assembly. The two halves of the case mate together by pins and are fastened with snap catches. The case has carrying handles on the ends.

Subparagraph *i*. Delete the first sentence and substitute: This is a metal case designed to hold one transmitter rf tuner and one receiver rf tuner.

Paragraph 26*a*, last line. Change "g" to: f.

Page 41, paragraph 26. Add subparagraph *f* after subparagraph *e*:

f. Running Spares in Accessories Case CY–1344/GRC (fig. 32.1). Three spare tubes, types 6AN4, 6AF4A, and 5768, are stored in the case. They are clamped to a shelf mounted to the rear of the blank panel covering the two unused filter storage recesses. A $\frac{5}{16}$-inch open end wrench, which is mounted above the shelf, is for the purpose of disassembling the receiver tuner.

Page 41, paragraph 27. Add after the last sentence: The A-band circuit labels (Radio Frequency Amplifier AM–1180/GRC, Amplifier-Converter AM–1179/GRC, and Antenna AS–

756/GRC) and the D-band circuit labels (Radio Frequency Amplifier-Multiplier AM–1178/GRC, Amplifier-Converter AM–1177/GRC, and Antenna AS–755/GRC) are bound in books which are packaged in waterproofed envelopes and taped to the outside of the A-band and D-band tuner cases, respectively.

Paragraph 28*b*, line 6. Change "tabel" to: **table.**

Page 42, paragraph 30. Delete paragraph 30 and substitute:

30. Differences in Assemblies

Differences exist in some assemblies of Radio Transmitters T–302/TRC and T–302A/TRC, Radio Receivers R–417/TRC and R–417A/TRC, and Power Supplies PP–685/TRC and PP–685A/TRC. Modifications have been made in certain plug-in assemblies as indicated in the chart below. Regardless of the design differences, the units are completely interchangeable. These differences have been noted on the schematic illustrations. The text also refers to the differences where applicable. It should be pointed out that the reference to the unlettered model and model A is not of much significance since an interchangeable plug-in assembly from an unlettered model may be found in a model A unit, and vice versa. Accordingly, different plug-in assemblies must be identified by type. A list of different types of plug-in assemblies for Radio-Transmitters T–302/TRC and T–302A/TRC is contained in the table in paragraph 317*f* (also see Changes No. 1 and 2). A table showing the different types of plug-in assemblies for Radio Receivers R–417/TRC and R417A/TRC is contained in paragraph 317*i* (Change No. 1). The main types of Power Supplies PP–685/TRC and PP–685A/TRC are covered in paragraph 317*g* (Change No. 1).

Name of component	Number of type	Fig. No.
		6, 268
Radio Transmitter T–302/TRC and T–302A/TRC:	4	8
Base-band amplifier and metering plug assembly	5	7
Rf exciter	4	8
Afc unit	1	
Radio Frequency Amplifier AM–1180/GRC	1	11
Radio Frequency Amplifier AM–912/TRC	1	11
Radio Frequency Amplifiers AM–915/TRC and AM–915A/TRC	1	
Radio Frequency Amplifier-Multiplier AM–1178/GRC		21
Radio Receivers R–417/TRC and R–417A/TRC:	3	23
Calibrator	9	22
Base-band amplifier and order wire	7	22
Limiter, discriminator, and afc	2	21
Receiver chassis	3	
If amplifier	1	
Amplifier-Converter AM–1179/GRC	3	11
Amplifier-Converter AM–913/TRC	3	11
Amplifier-Converter AM–914/TRC	1	
Amplifier-Converter AM–1177/GRC	4	12, 13
Power Supplies PP–685/TRC and PP–685A/TRC		

Page 43, paragraph 31. Make the following changes:

Add to the title: and Associated VHF Systems. Delete subparagraphs *a* and *b* and substitute:

a. Frequency Range. The radio relay system has four frequency bands, with a transmitter and receiver rf tuner for each band: A-band, 50 to 100 mc; B-band, 100 to 225 mc; C-band, 225 to 400 mc; and D-band, 400 to 600 mc. The A-band provides 200 channels that cover the range of 50.125 to 99.875 mc in .25-mc steps. The B-band provides 250 channels that cover the range of 100.25 to 224.75 mc in .5-mc steps. The C-band provides 175 channels that cover the range of 225.5 to 399.5 mc in 1-mc

steps. The D-band provides 133 channels that cover the range of 401.25 to 599.25 mc in 1.5-mc steps. The receiver intermediate-frequency bandwidth for A band between half-power points (3 db down) is about 185 kc; between one-thousandth-power points (30 db down), about 500 kc. The receiver intermediate-frequency bandwidth for B-, C-, and D-bands between half-power points is about .7 mc; between one-thousandth-power points, 2.2 mc. The rated frequency stability on all bands is ±.02 percent for normal temperature variations.

b. Antennas. The A-band (50 to 100 mc) antenna consists of two arrays, each array being a three-element Yagi composed of a dipole director, a dipole radiator, and a dipole reflector (fig. 81.1). Each set of dipoles is mounted on an aluminum antenna boom upon which a matching transformer is permanently fixed. The two antenna booms are mounted at the ends of an array-spacer bar, or cross-arm, that is mounted on a single 45-foot mast. Means are provided to adjust the lengths of the dipole elements and the spacing between the dipoles and between the arrays, to cover the frequency range of the band. The arrays may be used separately for transmitting and receiving, or together as a stacked array. The antenna system may be mounted for either horizontal or vertical polarization. For the B- and C-bands (100 to 400 mc), the antennas consist of a pair of parallel dipoles in front of an aluminum screen-mesh plane reflector; the D-band range of 400 to 600 mc employs two pairs of parallel dipoles with the same reflector. Both a transmitting and a receiving antenna, for use at one end of one radio jump, are mounted on a cross arm on the single 45-foot mast. The antennas are comparatively broad-band: the 100- to 225-mc band is covered in only three dipole adjustments; the 225- to 400-mc band in only two. The 400- to 600-mc band requires no dipole adjustment. Each antenna (except A band) may be positioned independently for horizontal or vertical polarization.

Subparagraph *e*. Delete the second sentence and substitute: Each filter causes a loss of about 1 db at the operating frequency. The A-band filters cause a loss of about 40 db at all frequencies more than 12 mc from the operating frequency; the B-band filters cause a loss of about 45 db at all frequencies more than 21 mc from the operating frequency; the C-band filters cause a loss of about 45 db at all frequencies more than 30 mc from the operating frequency; and the D-band filters cause a loss of about 35 db at all frequencies more than 30 mc from the operating frequency.

Page 49, paragraph 38*b*, first sentence. Delete the part of the sentence in parentheses.

Page 54, paragraph 41*b*(4), last line. Delete expression "$\frac{D^2K}{1.5}$"

Page 55, paragraph 43*b*, line 5. Change "stations" to: **station**

Page 57, paragraph 46. Make the following changes: Add the following subparagraph heading after line 4:

a. Procedure.

Subparagraph *b*(3). Change "$\sqrt{75 \times 150 = 106}$" to: $\sqrt{75 \times 150 = 160}$.

Page 63, paragraph 48, line 4. Change "reasonable" to: **reasonably.**

Page 64, figure 50. In line 4 of the note, change "FRON" to: **FROM.** Paragraph 48*d*, line 8. Change "213" to: **132.**

Page 65, paragraph 49*b*(1), line 3. Change "of the figure" to: **of figure.**

Page 67, paragraph 51*a*. Delete the first sentence and substitute: Twenty-two band-pass filters are available for use on the A-, B-, C-, and D-bands.

Page 70, paragraph 52*b*(3). Delete subparagraph (3) and substitute:

(3) Table I lists general rules for minimum frequency separations for Radio Set AN/TRC–24 when used with band-pass filters. When suitable frequencies are obtained, these rules provide the simplest way of making frequency assignments.

Delete table I and substitute:

Page 75, chart, "Band D" column heading. Change "(400–60 Omc)" to: **(400–600 mc).**

Table I. Minimum Frequency Separation at a Given Station (Mc)

Transmitter-receiver					Two receivers	Two receivers oppositely polarized
Band [a]	On same mast [b]	On same mast with antenna cross-polarized [b], [c]	On different masts			
			Near by [d]	1 mile apart [e]		
A	9	----	8	3	1	1
B	18	10.5	10.5	3	1.5	1
C	28	11	11	3	2	1
D	40	12	12	3	3	1.5

[a] A-band, 50–100 mc; B-band, 100–225 mc; C-band, 225–400 mc; D-band, 400–600 mc.
[b] The antennas for transmitting and receiving on the same circuit at one end of any jump are on the same mast.
[c] See paragraphs 35 and 57*a* on polarization.
[d] Less than ¼ mile.
[e] The 3-mc value applies to antennas separated by 1 mile of air-distance over level earth.

Page 85, paragraph 59*c*. Make the following changes:

Subparagraph (3), line 7. Change "(20 kc)" to: **20 kc.**

Subparagraph (4), line 5. Change "spiral-cable" to: **spiral-four cable.**

Paragraph 60*a*, oscillator frequency deviation chart, "Band" column.

Change "B" to: **A and B;** change "C" to: **C and D.**

Page 86, paragraph 60*b*. Make the following changes:

Delete and substitute the following operation characteristics as indicated:

Noise level.....8 db or less (A-band).
12 db or less (B-band).
15 db or less (C- and D-bands).

Afc pull-in range...At least ±250 kc with an rf input of 50 microvolts (A-band).
At least ±400 kc with an rf input of 50 microvolts (B- and C-bands).
At least ±600 kc with an rf input of 50 microvolts (D-band).

Transmitted signals levels, chart, "Band" column. Items 1 and 3.

Change "B" to: **A and B.**

Items 2 and 4. Change "C" to: **C and D.**

Page 88, paragraph 63, line 3. Change "or" to: **for.**

Page 90, paragraph 64*d*. Make the following changes: Delete subparagraph (1) and (2) and substitute:

(1) In some equipments, Radio Frequency Amplifier-Multipliers AN–915/TRC and AM–915A/TRC (C-band) are shipped installed in the transmitter chassis and Radio Frequency Amplifier AM–1180/GRC (A-band), Radio Frequency Amplifier AM–912/TRC (B-band), and Radio Frequency Amplifier-Multiplier AM–1180/GRC (D-band) are each shipped installed in a tuner case. In most equipments, however, the transmitter chassis is shipped with no tuner installed; the four tuners are shipped separately in their respective tuner cases. Install the correct rf tuner in the transmitter for the rf channel assigned ((3) below).

***Caution:* When installing an rf tuner, be sure it is properly located on the guide rails in the transmitter.**

(2) In some equipments, Amplifier-Converter AM–914/TRC (C-band) is shipped installed in the receiver chassis and Amplifier-Converter AM–1179/GRC (A-band), Amplifier-Converter AM–913/TRC (B-band), and Amplifier-Converter AM–1177/GRC (D-band) are each shipped installed in a tuner case. In most equipments, however, the receiver chassis is shipped with no tuner installed; the four tuners are shipped separately in their respective tuner cases. Install the correct rf tuner in the receiver for the rf channel assigned ((3) below).

Page 91, paragraph 64*e*(2). Delete subparagraph (2) and substitute:

(2) The band-pass filters are part of major groups in Filter Kit MK–236/TRC, Filter Kit MK–123/TRC, Filter Kit MK–124/GRC, and Filter Kit MK–228/GRC, and are shipped and housed in Accessories Cases CY–1344/TRC (figs. 10 and 10.1). Refer to the chart below to determine the filter to be used for the rf channel assigned.

Band-pass filters and frequency range chart

Band-pass filter	Frequency range (mc)	Band	Channel number in frequency range
F–238/U	50.0– 58.5	A	1– 34
F–239/U	58.5– 67.0	A	34– 68
F–240/U	67.0– 75.0	A	68–102
F–241/U	75.0– 84.0	A	102–136
F–242/U	84.0– 92.5	A	136–170
F–243/U	92.5–100.0	A	170–204
F–192/U	100.0–121.0	B	1– 42
F–193/U	121.0–142.0	B	43– 84
F–194/U	142.0–163.0	B	85–126
F–195/U	163.0–184.0	B	127–168
F–196/U	184.0–205.0	B	169–210
F–197/U	205.0–226.0	B	211–250
F–199/U	223.0–253.0	C	26– 53
F–200/U	253.0–283.0	C	54– 83
F–201/U	283.0–313.0	C	84–113
F–202/U	313.0–343.0	C	114–143
F–203/U	343.0–373.0	C	144–173
F–204/U	373.0–403.0	C	174–200
F–233/U	400.0–450.0	D	67–101
F–234/U	450.0–500.0	D	101–134
F–235/U	500.0–550.0	D	134–167
F–236/U	550.0–600.0	D	167–200

Page 92, paragraph 66*b*. Add subparagraph (3) after subparagraph (2):

(3) An A-band antenna installation needs two antenna systems when it is double-stacked, one for receiving and another for transmitting.

Page 96, paragraph 67*b*. Add subparagraph (18.1) through (18.3) after subparagraph (18):

(18.1) For A-band antenna installation, follow the steps in (18.2) and (18.3) below. For B-, C-, or D-band antenna installation, continue with the steps in (19) and (20) below. The remaining steps apply to all bands.

(18.2) Add two more mast sections and a guy plate to the mast. Use the shackles at the mast ends of the guys and fasten the four 70-foot Guys MX–1484/G to the guy plate at the top of the eighth mast section. Add the last (ninth) mast section to the mast.

(18.3) Remove the A-band mast head casting from Antenna Case CY–1760/GRC, and slide the mounting aperture (closed at one end) of the casting onto the top of the ninth mast section. Make sure that the slots at the end of the mast engage the pin across the aperture. Continue with steps (21).

Page 97, paragraph 67*b*. Make the following changes:

Subparagraph (20), line 1. Change "7" to: 77.

Subparagraph (23). Delete the note and substitute:

Note. The mast should now consist of 9 mast sections having a total length of 45 feet, topped either by the A-band mast head casting of Antenna Reflector Support AB–325/TRC.

Paragraph 68*c*, line 3. After "(fig. 16)," add: or from the A-band antenna case (fig. 15.1).

Page 100, paragraph 68*d*(3), last line. Change "(par. 69)" to: **(pars. 68.1 and 69).**

Page 101, paragraph 68*e*, line 1. Change "(par: 69)" to: **(pars. 68.1 and 69).**

Add paragraph 68.1 after paragraph 68:

68.1. Assembling Antenna System, A-Band

a. General.

(1) An operating A-band antenna system consists of the following components: one array-spacer bar; two antenna booms, each with a matching transformer permanently attached; and twelve each of the fixed dipole elements and the long and short dipole inserts. These, and the wrenches needed for the assembly, are packed in Antenna Case CY–1760/GRC (fig. 15.1). Two Radio Frequency Cable

Assemblies CG-1030/U, each 80 feet long, are wound on Cable Reel RC-404/TR (fig. 15).

(2) The antenna is mounted on the top of the support mast by means of the mast head casting (par. 67*b*(18.3)). Two saddle grooves, at right angles to each other, are provided in this casting to mount the array-spacer bar. An antenna boom, bearing an array consisting of three adjustable dipoles (director, radiator, and reflector), is mounted at each end of the array-spacer bar.

(3) The antenna system may be installed in either of two ways: as a single-stacked system, with one antenna array operating as a transmitting antenna and the other as a receiving antenna; or as a double-stacked system with both antenna arrays operating in parallel for either transmission or reception. In either case, the spacing, adjustment, and connections of the antenna system components are critical. Appropriate markings are provided on the antenna components for use in adjusting the system during installation. These markings indicate the proper spacing between the dipole elements as well as their length.

(4) Some of the conditions under which an A-band antenna should be double-stacked include operation in areas of high electrical interference, an extremely long jump, and when A-band transmission is desired with B-, C-, or D-band reception.

(5) For double-stacked operation, it will be necessary to requisition an additional mast, antenna, and the components to fabricate a stacking cable (*b* (16) below).

Note. If band A is used only for one direction in a jump, and no stacking cable is available to combine the antenna arrays for parallel operation, remove the unused array from the mast. If this is not done, the presence of the inoperative antenna array will cause a shift in the radiating pattern of the operating array, thereby causing signal deterioration.

b. Procedure.

(1) The antenna can be mounted for either horizontal polarization (dipoles horizontal) or vertical polarization (dipoles vertical) (fig. 81.1). Do not attempt to transmit to a vertically polarized antenna with a horizontally polarized antenna or vice versa; considerable signal attenuation will occur.

(2) For horizontal polarization, follow the steps in (3) through (5) below. For vertical polarization, follow the steps in (6) through (8) below. The remaining steps apply for both.

(3) Remove the array-spacer bar (fig. 81.1) from the antenna case. See that the guide line on each boom clamp (at both ends of the spacer bar) is alined with the guide line on the end of the spacer-bar insert. Also see that the guide line on the end of each spacer-bar insert is alined with the guide slot marked HORIZ POL on each end of the spacer-bar centerpiece (in line with the center of the pinch clamp). If necessary, loosen the pinch clamps at the ends of the centerpiece and turn the inserts until they are properly alined. Then retighten the pinch clamps.

(4) Mount the array-spacer bar in the mast head casting groove which is parallel to the antenna support mast (fig. 81.1). Be sure that the guide line near the center of the array-spacer bar is alined with the corresponding guide line marked HORIZ POL on the top of the mast head casting, and that the pilot pin on the spacer bar is in the corresponding pilot hole at the center of the casting.

(5) Secure the array-spacer bar to the mast head casting by means of the cap and captive bolts provided, and continue with (9) below.

(6) For vertical polarization, proceed in the following manner: Remove the array-spacer bar from the antenna case. See that the guide line on each boom clamp (at both ends of the spacer bar) is alined with the guide

line on the end of the spacer-bar insert. Also see that the guide line on the end of each spacer-bar insert is alined with the guide line marked VERT POL on each end of the spacer-bar centerpiece. If necessary, loosen the pinch clamp at the end of each insert and turn the inserts until they are properly alined. Then retighten the pinch clamps.

(7) Mount the array-spacer bar in the mast head casting groove which is at right angles to the antenna support mast (fig. 81.1). Be sure that the guide line near the center of the array-spacer bar is alined with the corresponding guide line marked VERT POL on the side of the mast head casting, and that the pilot pin on the spacer bar is in the corresponding pilot hole at the center of the casting.

(8) Secure the array-spacer bar to the mast head casting by means of the cap and captive bolts provided.

(9) The following steps apply for both horizontal and vertical polarization. Note the markings on the array-spacer bar: A1–A16 through A177–A200. These markings represent corresponding groups of channels and are used as guides for setting the array-spacer bar to the required length (fig. 81.1, dimension D). For a single-stacked installation, always set the array-spacer bar at A1–A16. This provides maximum separation of the antenna arrays for minimum coupling between antennas. For a double-stacked installation, set the array-spacer bar at the markings corresponding to the group of channels within which the assigned channel falls.

(10) Set the length of the array-spacer bar by loosening the bolts of the pinch clamps on the bar and sliding the two adjustable inserts in or out of the centerpiece as required for the desired channel setting, keeping the guide line as set in either (3) or (6) above.

(11) For both horizontal and vertical polarization, mount the antenna booms on the array-spacer bar by means of the boom clamps provided at the ends of bar. Locate the boom clamp on the longer (reflector) side of each boom against the edge of the matching transformer. The proper mounting position is indicated by guide lines and the words SPACER-BAR CLAMP etched on the booms. Aline the index line with the raised arrows on the clamp, and the arc with the edge of the clamp. Orient both booms so that the coaxial connectors on the matching transformers both face in the same direction, as shown in figure 81.1. This is especially important for double-stacked operation so as to prevent electrical cancellation.

Note. When the antenna system is completely assembled and the mast is raised, the matching transformers will always be on the director portions of the antenna booms that point toward the other station.

(12) The director, radiator, and reflector dipoles are mounted on the antenna booms. The locations of the director and reflector dipoles are clearly marked on each boom. The radiator elements are mounted on the matching transformers which are permanently fixed at approximately the center of the antenna booms. The director and reflector elements are mounted in dipole supports which must be positioned on the antenna booms to establish the proper spacing between the dipoles for the rf channel employed (fig. 18.1, dimensions E and F). Each dipole consists of four elements, two fixed-length elements and two insert elements. The insert elements are used to vary the overall length of the dipole as required for the channel used (fig. 81.1, dimensions A, B, and C). Proceed as follows to install the dipole elements.

(*a*) The booms bear markings corresponding to groups of rf channels exactly like those on the array-spacer bar described in (9) above. Loosen the bolts in the director and reflector dipole supports and move these supports to line up with the appro-

priate channel markings on the boom by alining the side of the dipole support bearing the faced arrow with the appropriate channel markings on the booms. Make sure that the lengthwise guide line on the boom is also alined with the faced arrow before tightening the bolts of the dipole supports.

Note. For single-stacked arrays, the operating channels of the transmitting and receiving antenna are different and, therefore, the spacings of the dipole supports on the two antenna booms will be different. For double-stacked arrays, both antennas operate on the same channel, and the spacings of the dipole supports on the two antenna booms are the same.

(*b*) Insert the threaded ends of the fixed dipole elements into the fittings provided in the dipole supports and matching transformers; tighten securely. All fixed dipole elements are interchangeable in all positions of the director, radiator, and reflector.

(*c*) The required lengths of the dipoles for any given channel are obtained by setting the dipole inserts which are inserted in the fixed dipole elements at the proper markings. These markings represent the length in inches from the center of the dipole support to the tip of the variable element. The table in figure 81.1 shows the required settings of the variable dipole elements for all the channels of the band. Note that two types of dipole inserts, long and short, are provided to permit flexibility in making up the required lengths of the dipoles. These elements are otherwise interchangeable.

Caution: **The dipole elements are easily bent, particularly when mounted. Handle them carefully. Bent dipole elements decrease the operating efficiency of the antenna system.**

(*d*) Referring to figure 81.1, determine the dipole settings required for the channel or channels to be used. Select, from the two sizes furnished, the dipole insert elements needed to obtain the lengths required. Insert the flat ends of the adjustable elements into the open ends of the fixed elements; adjust to the predetermined settings, and fasten in place by means of the knurled nuts provided. These settings are critical. Make all adjustments carefully when assembling the antenna system. See that the components, after being set for a given dimension, do not move while being tightened.

(13) To connect a single-stacked array, continue with (14) and (15) below. To connect a double-stacked array, continue with (16) through (18) below. Subparagraph (19) below applies to both.

(14) Unroll two 80-foot rf cables (Radio Frequency Cable Assembly CG–1030/U) from Cable Reel RC–404/TR. Remove the watertight cover from one end of each of these cables. Wind the uncovered end of one 80-foot rf cable around the array-spacer bar from the center outward, and fasten the end to the connector of the matching transformer on the antenna boom. Wind the uncovered end of the second 80-foot rf cable around the other half of the array-spacer bar from the center outward, and fasten the end to the connector of the matching transformer on the other antenna boom.

(15) Attach two cable clamps (fig. 75 and 78) stored in Antenna Case CY–1760/GRC, one on each side of the mast, by securing the snaps to the loops at the ends of the 70-foot guys. Fasten a cable clamp to each of the 80-foot rf cables. Leave some slack in the cables to ease strain at the matching transformer connectors (fig. 81.2, detail A).

(16) To double-stack an array, it will be necessary to fabricate a stacking harness (fig. 81.2, detail B). This is a six-part assembly consisting of two each 39-inch lengths of RG–11A/U coaxial cable terminated at one end with type UG–710A/U connectors

(which attach to the matching transformers on the antenna booms) and at the other end with type UG–572/U connectors; two each 25-inch lengths of RG–133/U coaxial cable terminated with type UG–573A/U connectors at each end; a type UG–566A/U tee-connector in the center; and a type UG–643A/U adapter to connect the antenna cable to the tee-connector junction of the stacking cable. The adapter is supplied in Antenna Case CY–1760/GRC; the remaining components must be requisitioned along with the additional mast and antenna required for the double-stacked installation (*a*(5) above).

(17) Wind the stacking harness around the array-spacer bar and attach the ends to the connectors of the matching transformers on the antenna booms (fig. 81.2, detail C). Unroll one 80-foot rf cable (Radio Frequency Cable Assembly CG–1030/U) from Cable Reel RC–404/TR. Remove the watertight cover from one end of the cable and attach the connector to the adapter at the center of the stacking harness.

(18) Attach a cable clamp (fig. 75 and 78), stored in Antenna Case CY–1760/GRC, to the mast by securing the snap to the loop at the end of one of the 70-foot guys. Fasten the clamp to the 80-foot rf cable. Leave some slack in the cable to ease strain at the stacking harness tee-connector.

(19) Extend both 80-foot rf cables along the entire length of the mast. Secure a cable clamp to each rf cable at a point about 6 inches below the guy plate that is located 20 feet from the mast base. When the mast is erect, the cable clamp secures the cable to the upper part of the mast (fig. 82). Secure the snap of the cable clamp to the loop at the end of a 58-foot guy.

Caution: **To avoid unnecessary electrical losses in the 80-foot rf cables, be sure that there are no kinks or bends in the cables and that each 80-foot rf cable is secured in opposing sides of the mast.**

Paragraph 69. Delete paragraph 69 and substitute:

69. Assembling Antenna System, B-, C-, and D-Bands

a. General. The following parts are required to install a complete B-, C-, or D-band transmitting and receiving system.

(1) Two Antenna Reflectors AT–414/TRC that are packed in Antenna Reflector Case CY–1385/TRC (fig. 16); they can be removed upon loosening the two captive hinge bolts on each reflector.

(2) Six Antenna Dipoles AT–412/TRC for the B-band range of frequencies; they are in Antenna Case CY–1371/TRC (fig. 17). Six Antenna Dipoles AT–413/TRC for the C-band range of frequencies; they are in Antenna Case CY–1370/TRC (fig. 17). Twelve Antenna Elements AT–566/GRC for the D-band range of frequencies which are in Antenna Case CY–1761/GRC (fig. 17.1).

(3) Two Radio Frequency Cable Assemblies CG–1030/U (each 80 feet long); they are wound on each Cable Reel RC–404/TR (fig. 15).

(4) Two harnesses (Radio Frequency Cable Assembly CG–1042/U), each 40 inches long, are contained in each of the B-band and C-band antenna cases (fig. 17). Six 3 foot 4 inch long (Radio Frequency Cable Assemblies CG–1370/U) and four 2 foot 2 inch long harnesses (Radio Frequency Cable Assemblies CG–1544/U) are contained in the D-band antenna case (fig. 17.1).

(5) Four Reflector Guys MX–1483/G, six cable clamps, four shackles and ring assemblies, and the tools and wrenches needed are in Antenna Reflector Support Case CY–1387/TRC (fig. 16).

b. Procedure.

(1) Remove the two reflectors from the reflector case, unfold them, and lock the reflector hinges (fig. 77) in the unfolded position with the captive bolts.

(2) The reflectors can be secured to the reflector support for either horizontal

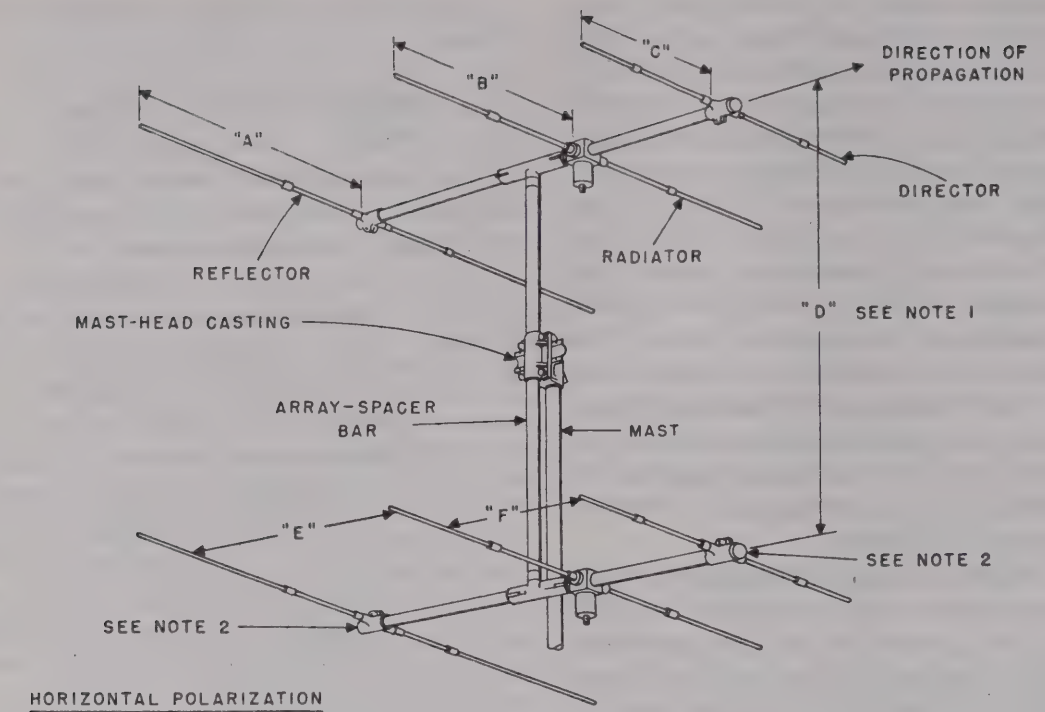

HORIZONTAL POLARIZATION

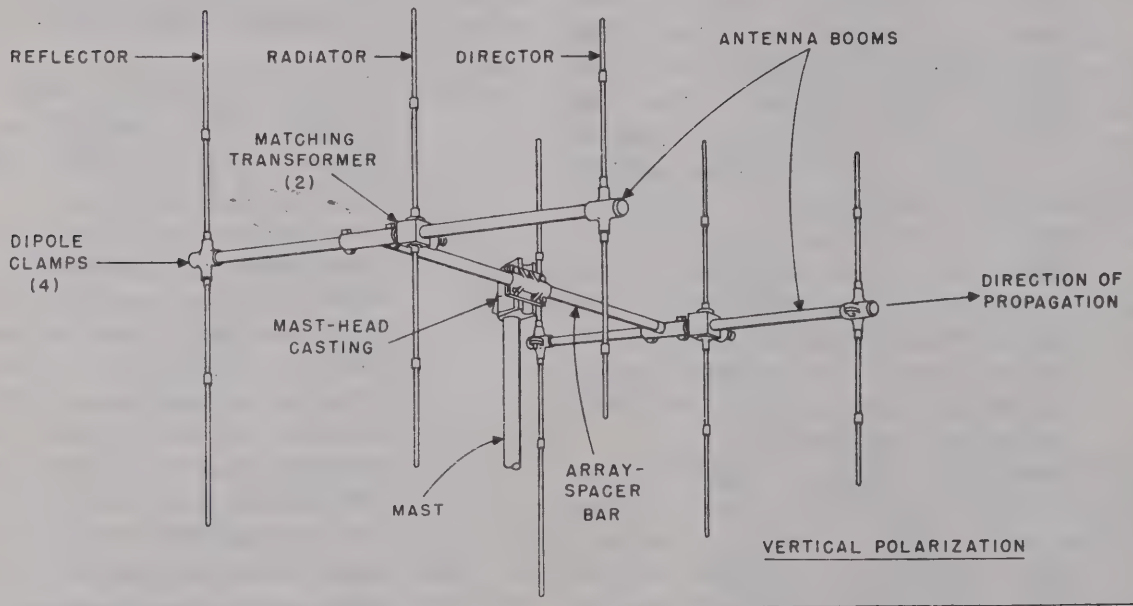

VERTICAL POLARIZATION

CHANNEL	FREQ. MC	"A"	"B"	"C"
1-16	50 - 54	$60\frac{3}{4}$	$56\frac{1}{4}$	$49\frac{1}{4}$
17-32	54 - 58	$56\frac{1}{2}$	$52\frac{1}{4}$	$45\frac{3}{4}$
33-48	58 - 62	52	$48\frac{1}{4}$	$42\frac{1}{4}$
49-72	62 - 67	$48\frac{3}{4}$	45	$39\frac{1}{2}$
73-88	67 - 72	$44\frac{1}{2}$	$41\frac{1}{4}$	36

CHANNEL	FREQ. MC	"A"	"B"	"C"
89 - 108	72 - 77	$41\frac{1}{4}$	$38\frac{1}{4}$	$33\frac{1}{2}$
109 - 128	77 - 82	39	36	$31\frac{1}{2}$
129 - 152	82 - 88	$36\frac{1}{2}$	$33\frac{3}{4}$	$29\frac{1}{2}$
153 - 176	88 - 94	$34\frac{1}{4}$	$31\frac{3}{4}$	$27\frac{3}{4}$
177 - 200	94 - 100	$32\frac{1}{4}$	$29\frac{3}{4}$	26

NOTES:

1. SETTINGS FOR "D", "E", AND "F" ARE CALIBRATED IN CHANNELS, AND MARKED DIRECTLY ON ARRAY-SPACER BAR AND ANTENNA BOOMS.
2. FACED ARROW ON DIPOLE CLAMP IS ON SIDE NEAREST RADIATOR.

TM 687-C5-6

Figure 81.1. (Added) *Assembly of A-band antenna system.*

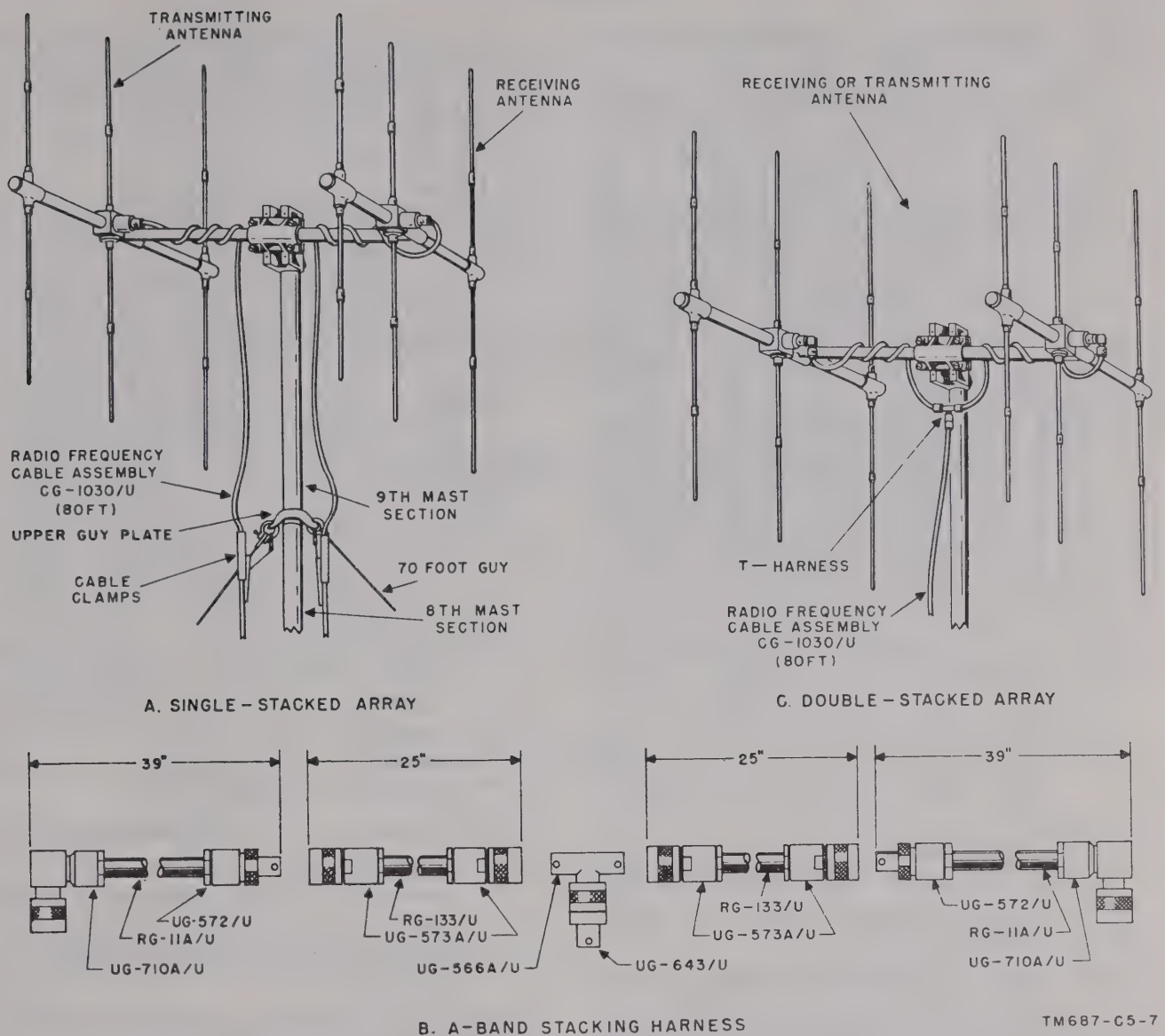

Figure 81.2. (Added) *A-band antenna arrays, showing connections for single and double stacking.*

polarization (dipoles horizontal) or vertical polarization (dipoles vertical) (figs. 82 and 83.1). Companion antennas must have the same polarization; if this is not done, considerable signal attenuation will occur. Dot not attempt to transmit to a vertically polarized antenna with a horizontally polarized antenna or vice versa.

(3) Remove the correct dipoles for the assigned radio-frequency channel or channels from the antenna cases. The C-band and D-band dipoles are shipped completely assembled in their respective cases; the B-band dipoles are shipped disassembled. To assemble the B-band dipoles before they are mounted on the reflector, screw two of the disassembled sections into each of the dipole V-heads.

(4) Tapped holes on each reflector are used for mounting the dipole antenna. For the B- and C-bands, these holes are marked with the channel ranges as given under the D position in figure 83. There is no positioning adjustment for the D-band dipoles. Select the proper holes on the reflector for the radio-frequency channel assigned and mount the dipole antenna in these

holes with the four captive screws on the dipole mounting.

(5) In addition to the D-position spacing for channel ranges, the B-band and C-band dipoles must be adjusted for dipole length and distance from the reflector, the L and S adjustments, respectively, on figure 83. The D-band dipoles are fixed in length and reflector spacing and require no adjustment. Follow the procedure outlined in (6) and (7) below for the required dipole adjustments.

(6) Loosen the chuck fitting on each dipole and slide the moving dipole section out to the channel marking corresponding to the assigned radio-frequency channel. Tighten the chuck fitting. This is the L adjustment shown in figure 83.

(7) Use the information given in figure 83 and determine for the assigned rf channel the correct distance between each dipole and the reflector (the S adjustment). Loosen the dipole mounting screw and any adjacent two of the four captive screws on the dipole mounting enough to allow sliding the dipole antenna to the channel marking corresponding to the assigned radio-frequency channel. Tighten the dipole mounting screw.

(8) After the dipoles have been properly positioned, remove the watertight connector cover at the end of each dipole antenna. For the B- and C-bands, fasten together the ends of the two cable harnesses (Radio Frequency Cable Assembly CG–1042/U) to the dipole antenna connectors (fig. 77). For the D-band, fasten the ends of four long cable harnesses to the dipole antennas, and two shorter cable harnesses to the center connectors of the long cables (fig. 83.1).

(9) Unroll two 80-foot rf cables (Radio Frequency Cable Assembly CG–1030/U) from Cable Reel RC–404/TR. Remove the watertight cover from one end of each of these cables. Fasten the uncovered end of one 80-foot rf cable to the connector at the center of one of the short cable harnesses, and the uncovered end of the other 80-foot rf cable to the connector at the center of the other short cable harness (figs. 77 and 83.1).

(10) Secure the cable clamp (figs. 75 and 78), stored in Antenna Reflector Case CY–1387/TRC, to each 80-foot rf cable at a point about 12 inches below the end that is coupled to the cable harness. Leave some slack in the cable to ease strain on the dipoles (fig. 77), then secure each cable clamp to the respective reflector with the cable clamp snap hook.

(11) Extend both 80-foot rf cables along the entire length of the mast. Secure a cable clamp to each 80-foot rf cable at a point about 6 inches below the guy plate that is located 30 feet from the mast base. When the mast is erect, the cable clamps secure the cable to the upper part of the mast (fig. 82). Secure the snap of each of the cable clamps to one of the loops at the ends of the 58-foot guys.

Caution: **To avoid unnecessary electrical losses in the 80-foot rf cables, be sure that there are no kinks or bends in the cable and that each 80-foot rf cable is secured on opposing sides of the mast.**

(12) Use the shackles supplied and attach the ends of the two sets of reflector guys (supplied in Antenna Reflector Support Case CY–1387/TRC) to the reflectors (figs. 77 and 83.1). Unreel the guys but do not fasten the free ends of the reflector guys.

Page 102, figure 82. Add "band B" to the caption.

Page 103, figure 83. Add "bands B and C" to the caption.

Page 105, paragraph 70. Make the following changes:

Subparagraph *c,* line 2. After "reflector guys," add: (if used).

Subparagraph *d,* line 3. After "reflector guys," add: (if used).

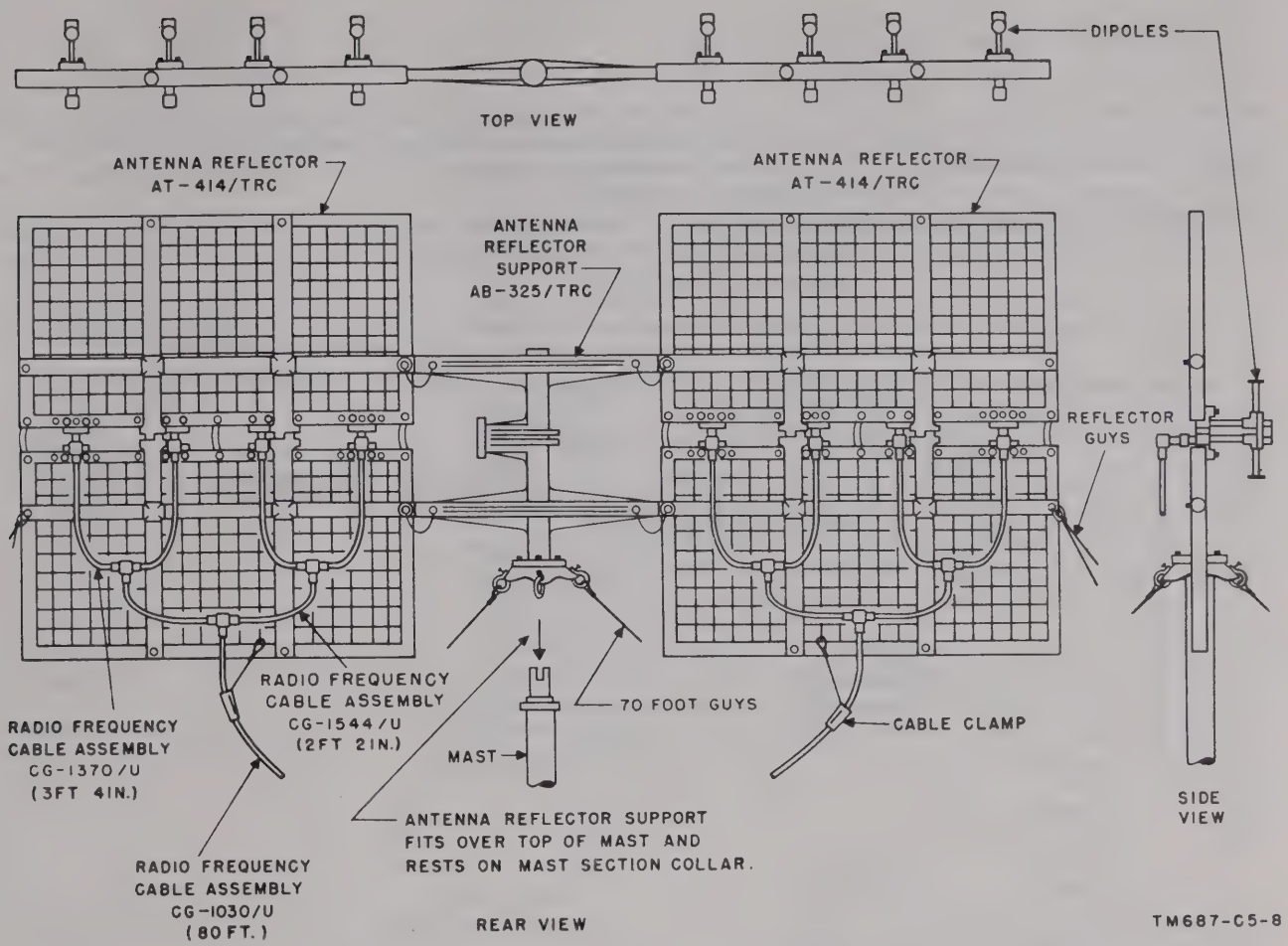

Figure 83.1. (Added) *Assembly of D-band antenna system.*

Page 108, figure 85. Delete "SEE NOTE 2" from the upper left-hand corner of the illustration.

Delete caption and substitute: **Cabling diagram at a radio terminal.**

Page 115, paragraph 80, chart, "Function" column, opposite "TEST switch (S104)." Make the following changes:

Line 11. Change "CATCH" to: **CATH.**

Line 15. After "C-band," add: or D-band.

Line 17. After "When the," add: A-band or.

Line 21. After "C-band," add: or D-band.

Line 23. After "When the" add: A-band or.

Page 116. Add paragraph 80.1 after paragraph 80:

80.1. Radio Frequency Amplifier AM-1180/GRC Controls

(fig. 87.1)

The following chart lists the front-panel controls of the transmitter A-band rf tuner and indicates what they do.

Control or instrument	Function
PLATE TUNE control	Tunes the plate circuit of the power amplifier. The PLATE TUNE dial, located above the PLATE TUNE control, is connected to this control. The PLATE TUNE dial is marked with the numbers of the rf channels and gives an approximate indication of the position of the PLATE TUNE control.
INPUT LOADING control	Adjusts the amount of loading (the effective grid-to-ground resistance) in the amplifier input circuit.

Control or instrument	Function
TRACKING ADJ control	Used to vary slightly the plate-to-ground capacitance of the amplifier. This control adjusts the frequency tracking of the amplifier.
SCREEN VOLTS ADJ control	Adjusts the voltage of the regulated +200- to +350-volt output from Power Supply PP-685/TRC.
OUTPUT COUPLING control	Adjusts the output coupling of the tuner amplifier. This control is adjusted to give maximum output power. The dial scale of this control is arbitrarily numbered from 0 to 12.

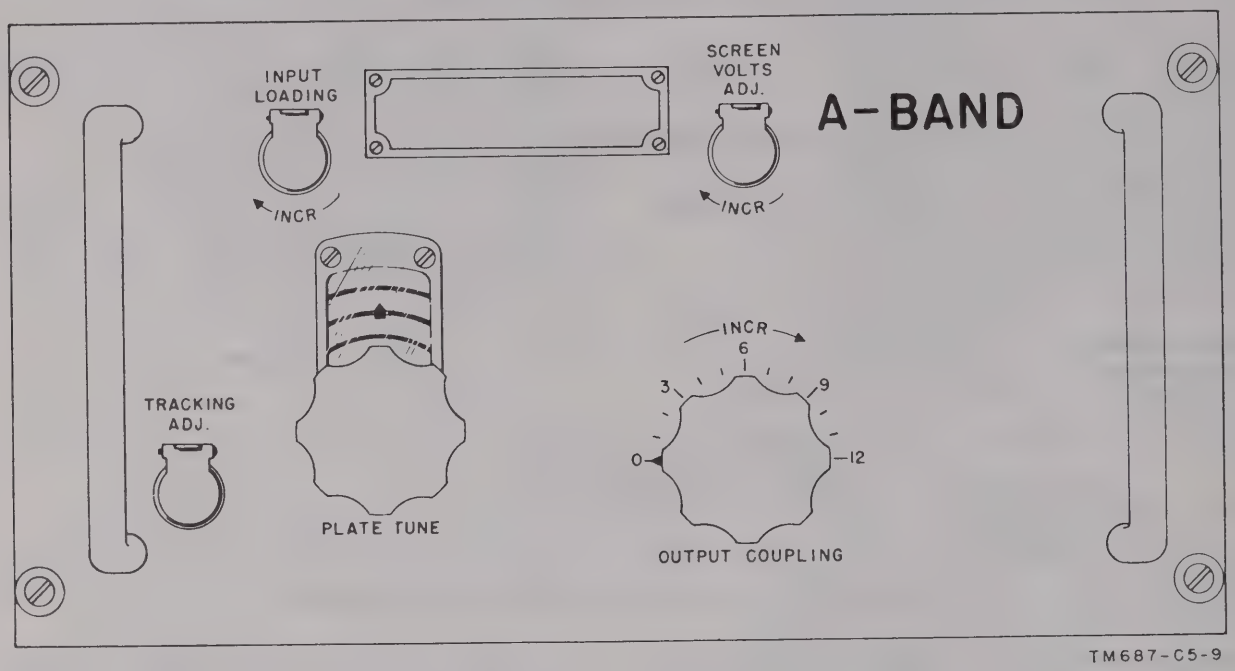

Figure 87.1. (Added) *Radio Frequency Amplifier AM-1180/GRC, front panel.*

Paragraph 81 chart, "Function" column,, item 2, last line. Change "plate" to: **PLATE.**

Page 120. Add paragraph 82.1 after paragraph 82:

82.1. Radio Frequency Amplifier-Multiplier AM-1178/GRC Controls (fig. 89.1)

The following chart lists the front-panel controls of the transmitter D-band rf tuner and indicates what they do.

Control or instrument	Function
MULTIPLIER GRID control	Adjusts the length of the grid cavity and the spacing between the plates of capacitor C29, thereby tuning the grid circuit of the multiplier. The MULTIPLIER GRID dial, located above and to the right of the MULTIPLIER GRID control knob, is geared to this control. The MULTIPLIER GRID dial is marked with the numbers of the rf channels and gives an approximate reading of the rf channel to which the MULTIPLIER GRID control is set.

Control or instrument	Function
MULTIPLIER PLATE control	Used to adjust the length of the plate cavity; it tunes the plate circuit of the frequency multiplier. The MULTIPLIER PLATE dial, located to the right of the MULTIPLIER PLATE control, is connected to this control. The MULTIPLIER PLATE dial is marked with the numbers of the rf channels and gives an approximate reading of the rf channel to which the MULTIPLIER PLATE control is set.
MULTIPLIER OUTPUT COUPLING control.	Adjusts the coupling between the tuner frequency multiplier and power amplifier. The dial scale of this control is arbitrarily numbered in a clockwise direction from 0 to 12.
POWER AMPLIFIER GRID control.	Used to vary the setting of capacitor C19; it tunes the grid circuit of the power amplifier. The POWER AMPLIFIER GRID dial, located above and to the right of the POWER AMPLIFIER GRID control, is connected to this control.
POWER AMPLIFIER PLATE control.	Adjusts the length of the plate cavity; it tunes the plate circuit of the power amplifier. The POWER AMPLIFIER PLATE dial, located to the right of the POWER AMPLIFIER control knob, is connected to this control. The POWER AMPLIFIER PLATE dial is marked with the numbers of the rf channels. It gives an approximate indication of the position of the POWER AMPLIFIER PLATE control.
AMPLIFIER OUTPUT COUPLING control.	Adjusts the output coupling of the tuner power amplifier. The control is adjusted to produce maximum output power. The dial scale of this control is arbitrarily numbered in a clockwise direction from 0 to 12.
SCREEN VOLTS ADJ control	Adjusts the voltage of the regulated +200- to +350-volt output from Power Supply PP-685/TRC.

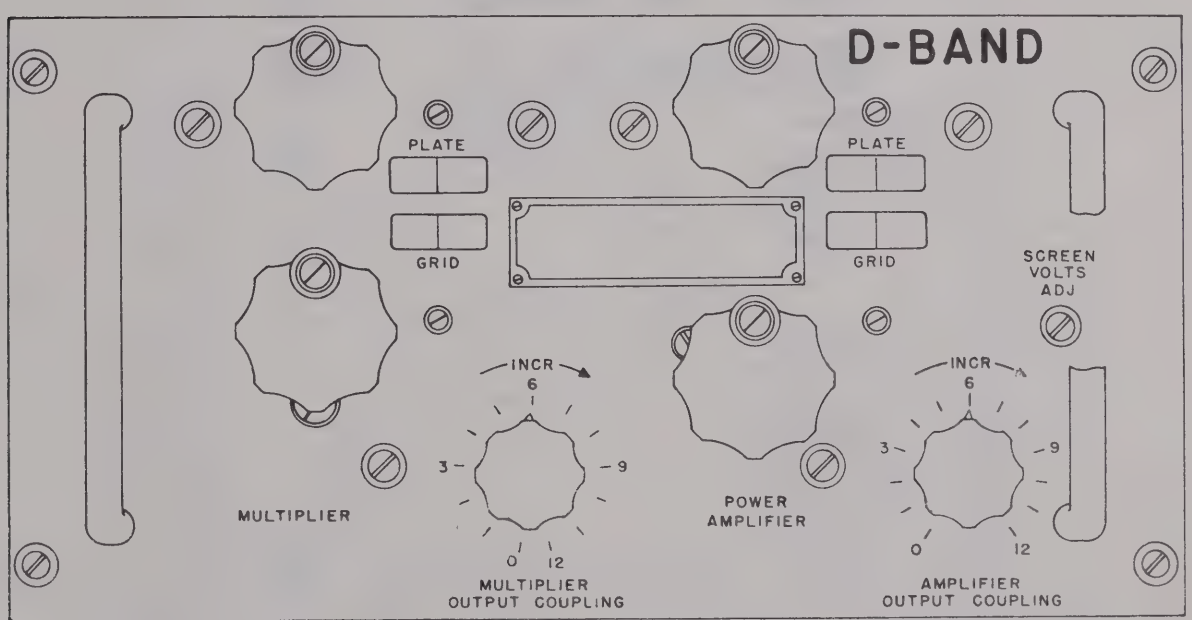

Figure 89.1. (Added) *Radio Frequency Amplifier-Multiplier AM-1178/GRC, front panel.*

Page 125, paragraph 87, chart, "Function" column, opposite OUTPUT ADJ control (R232). Delete the second sentence and substitute: The normal setting of this potentiometer is 25 for band A, 19 for band B, 15 for band C, and 12 for band D.

Page 127. Add paragraph 87.1 and figure 93.1 after paragraph 87:

87.1. Amplifier-Converter AM–1179/GRC Controls

(fig. 93.1)

The following chart lists the front-panel controls of the receiver A-band tuner and indicates what they do.

Control or instrument	Function
RF AMP control	Used to tune the oscillator and rf circuits of the receiver A-band tuner. The RF AMP dial, located above the tuning knob, is geared to it, is marked with the numbers of the rf channels, and gives an approximate indication of the position of the RF AMP control.
AFC control	A knob-controlled shaft that is coupled to the afc capacitor and provides manual control of this capacitor. The afc capacitor normally is controlled by the afc motor through a friction clutch. While the receiver afc circuits are operating, the afc capacitor will continuously correct the oscillator frequency to compensate for frequency drift of the incoming rf signal and of the oscillator.
INDEX control	Adjusts the index line of the RF AMP dial. Clockwise rotation of this control moves the index line to the left.

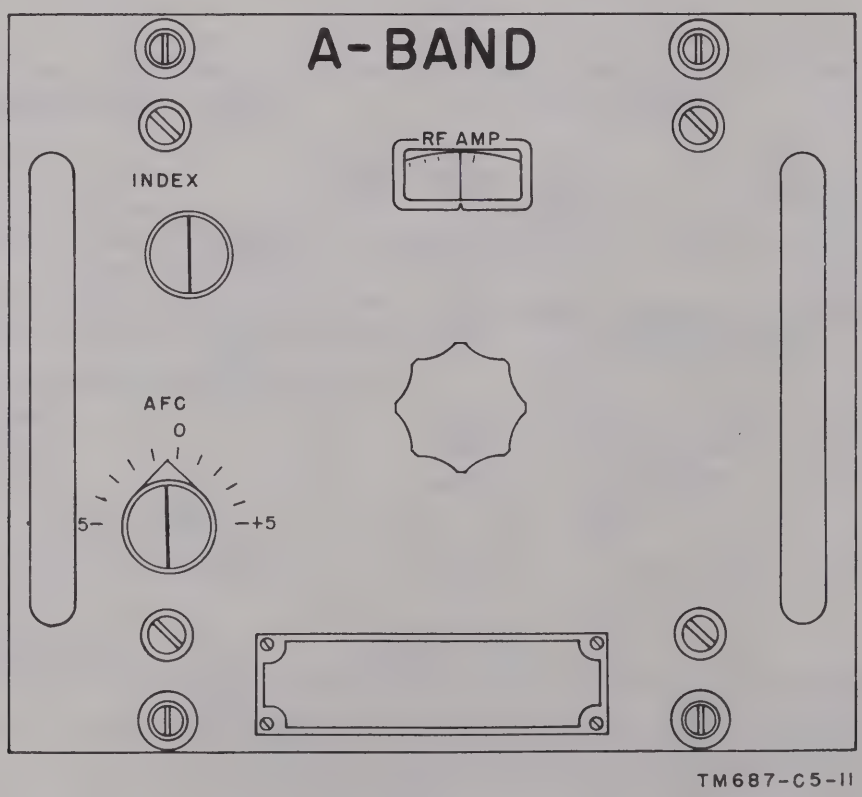

Figure 93.1. (Added) *Amplifier-Converter AM–1179/GRC, front panel.*

Page 128. Add paragraph 89.1 after paragraph 89:

89.1. Amplifier-Converter AM–1177/GRC Controls (fig. 95.1)

The following chart lists the front-panel controls of the receiver D-band tuner and indicates what they do.

Control or instrument	Function
RF AMP control	A knob-controlled shaft that is mechanically coupled to plungers in the coaxial line structures of first and second rf amplifiers V1 and V2; it tunes the two rf amplifiers of the receiver D-band tuner. The RF AMP dial, located above and to the left of the tuning knob, is connected to this control. The RF AMP dial is marked with the numbers of the rf channels and gives an approximate indication of the position of the tuning control.
FINE TUNE control	Used as a trimmer to make the second rf amplifier tuning track with the first rf amplifier over the entire D-band range.
OSC control	Adjusts the frequency of the local oscillator. The OSC dial, located above the OSC tuning knob, is geared to this control. The OSC dial is marked with the numbers of the rf channels to give an approximate indication of the position of the tuning control.
INDEX control	Adjusts the index line of the OSC dial. Clockwise rotation of this control moves the index line to the left.
AFC control	A knob-controlled shaft, coupled to the afc capacitor, that provides manual control of this capacitor. The afc capacitor normally is controlled by the afc motor through a friction clutch. While the receiver afc circuits are operating, this control will continuously correct the oscillator frequency to compensate for frequency drift of the incoming rf signal and of the oscillator.

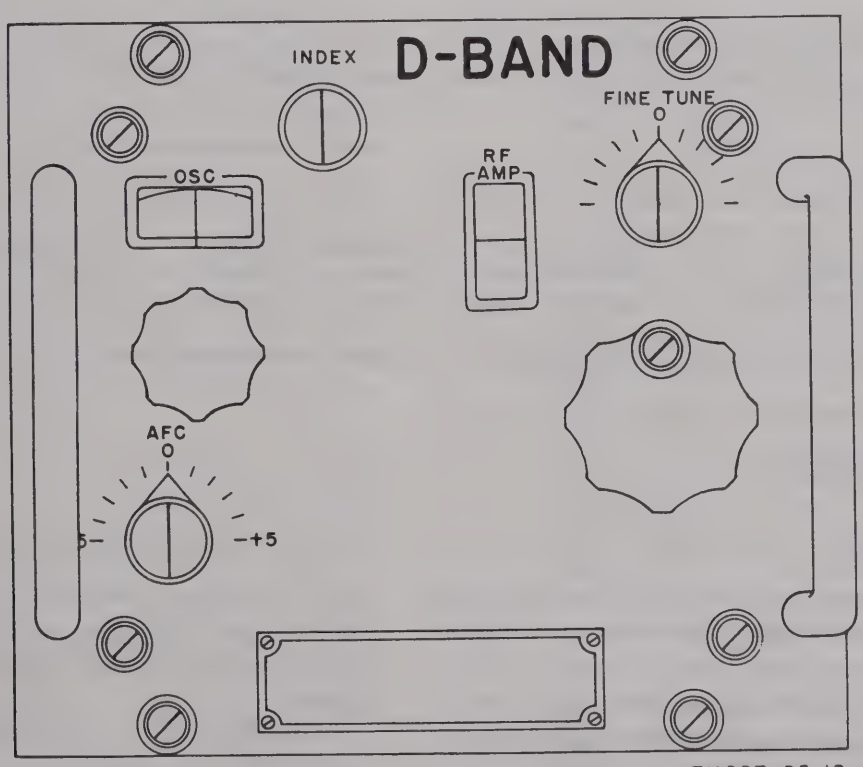

Figure 95.1. (Added) *Amplifier-Converter AM–1177/GRC, front panel.*

Paragraph 90. Delete the first sentence and substitute: Each of the band-pass filters (Band Pass Filters F–192/U through F–197/U, Band Pass Filters F–199/U through F–204/U, Band Pass Filters F–233/U through F–236/U, and Band Pass Filters F–238/U through F–243/U has two tuning knobs on its front panel (figs. 10 and 10.1).

Page 130, paragraph 95*a*, chart, "Control or switch" column, item 4. Change "SET" to: **SEL.**

Page 131, paragraph 95. Make the following changes:

Subparagraph *a*, chart, "Position" column, opposite "DRIVER TUNE control". Delete the last sentence in parentheses.

"Position" column, opposite "DRIVER OUTPUT COUPLING control". Delete and substitute: 10 for band A, 3 for bands B and C, 5 for band D (as indicated on the DRIVER OUTPUT COUPLING dial).

"Position" column, opposite "TEST switch." After "CATH," add: (PWR AMPL GRID if A-band tuner is used).

Subparagraph *b*. Delete the first sentence and substitute: Set the controls of the transmitter rf tuner to the position given in (1) below if the A-band tuner is used, to the position in (1.1) below if the B-band tuner is used, to the position given in (2) if the C-band tuner is used, or to the position given in (3) if the D-band tuner is used.

Designate existing subparagraph (1) **(1.1).**

Add subparagraph (1) after the first sentence in subparagraph *b*.

(1) *Presetting Radio Frequency Amplifier AM–1180/GRC controls.*

Control	Position
PLATE TUNE	For the desired rf channel as indicated on the PLATE TUNE dial.
OUTPUT COUPLING	6.

Add subparagraph (3) after subparagraph (2):

(3) *Presetting Radio Frequency Amplifier-Multiplier AM–1178/GRC Controls.*

Control	Position
MULTIPLIER GRID	For the desired rf channel as indicated on the MULTIPLIER GRID dial.
MULTIPLIER PLATE	For the desired rf channel as indicated on the MULTIPLIER PLATE dial.
POWER AMPLIFIER GRID	For the desired rf channel as indicated on the POWER AMPLIFIER GRID dial.
POWER AMPLIFIER PLATE	For the desired rf channel as indicated on the POWER AMPLIFIER PLATE dial.
MULTIPLIER OUTPUT COUPLING.	6.
AMPLIFIER OUTPUT COUPLING.	6.

Page 133, paragraph 103. Make the following changes: Subparagraph *b*. Delete subparagraph *b* and substitute:

b. Adjust the MOD ADJ screw-driver control for a +2-db reading on the MEASURE meter if Radio Frequency Amplifier AM–1180/GRC is used in the transmitter, for a 0-db reading if Radio Frequency Amplifier AM–912 TRC or Radio Frequency Amplifier-Multiplier AM–915/TRC is used, or for a —4-db reading if Radio Frequency Amplifier-Multiplier AM–1178/GRC is used.

Subparagraph *f*. Delete subparagraph *f* and substitute:

f. Adjust the MOD ADJ control for either a +2-db reading on the MEASURE meter if

Radio Frequency Amplifier AM–1180/GRC (A-band) or Radio Frequency Amplifier AM–912/TRC (B-band) is used in the transmitter, or for a 0-db reading if Radio Frequency Amplifier-Multiplier AM–915/TRC (C-band) or Radio Frequency Amplifier-Multiplier AM–1178/GRC (D-band) is used.

Page 134, paragraph 105. Make the following changes:

Delete the first sentence and substitute: Follow the procedure outlined in *a* below if Radio Frequency Amplifier AM–1180/GRC is used in the transmitter, in *a.1* if Radio Frequency Amplifier AM–912/TRC is used, in *b* if Radio Frequency Amplifier-Multiplier AM–915/TRC is used, and in *b.1* if Radio Frequency Amplifier-Multiplier AM–1178/GRC is used.

Designate existing subparagraph **a.1.**

Add subparagraph *a* after the first sentence.

Delete the designation "*a*" and substitute: *a.1.*

Add the following after the first sentence:

a.1. Tuning Radio Frequency Amplifier AM–1180/GRC (Channels A1 through A200). The procedures in (1) through (10) below describes the tuning of the rf tuner to any channel. The procedure in (11) through (15) below apply to the adjustment of the INPUT LOADING control, an adjustment that is made only after long periods of shut down or replacement of tubes. The procedures in (16) through (18) cover setting of the TRACKING ADJ control. This control requires infrequent attention after initial adjustment.

(1) Set the rf tuner PLATE TUNE control (fig. 87.1) and the transmitter frequency controls (par. 95) to the desired frequency.

(2) Connect Wattmeter ME–82/U to the ANTENNA jack. Place the DC TEST switch (fig. 90) on the power supply in the 750 LOWER SCALE position.

(3) Turn the 750V ADJ switch on the power supply to position 1.

(4) Place the DC TEST switch on the power supply to the 275 LOWER SCALE position.

(5) Adjust the SCREEN VOLTS ADJ control on the rf tuner panel for a reading of +275 volts on the power supply DC VOLTS meter.

(6) Set the transmitter TEST switch to the PWR AMPL GRID position (fig. 87).

(7) Adjust the DRIVER TUNE and DRIVER OUTPUT COUPLING controls on the transmitter for maximum PWR AMPL GRID reading. Adjust the PLATE TUNE and OUTPUT COUPLING controls on the rf tuner for a maximum reading on the wattmeter.

(8) Change the 750 VOLT ADJ switch on the power supply to position where 800 ±30 volts is indicated on the DC VOLTS meter (with the DC TEST switch in the 750 LOWER SCALE position). Readjust the power supply voltage to 115 volts if necessary. Adjust the SCREEN VOLTS ADJ control to obtain a PWR AMPL CATH current of 21 ua. Adjust the DRIVER OUTPUT COUPLING and retune the DRIVER TUNE control until the PWR AMPL GRID is maximum.

(9) Increase the DRIVER OUTPUT COUPLING and retune the DRIVER TUNE control until the peak PWR AMPL GRID is reduced to 23 ua or until the DRIVER OUTPUT COUPLING is completely clockwise. If the PWR AMPL CATH meter exceeds 23 ua during the tuning procedure, adjust the SCREEN VOLTS ADJ to reduce the reading to 21 ua.

(10) Readjust the PLATE TUNE and OUTPUT COUPLING controls for maximum reading on the wattmeter.

Note. Subparagraphs (11) through (15) below cover INPUT LOADING adjustment. This adjustment is made only if the PWR AMPL CATH meter reading cannot be reduced to 21 ua or if the PWR AMPL GRID reading is not 35 ±2 ua as in (8) above.

(11) Set the rf tuner PLATE TUNE control and the transmitter frequency controls (par. 95) to channel A1.

(12) Repeat the procedures given in (2) through (7) above.

(13) Set the INPUT LOADING control fully counterclockwise. Increase the voltage to 800 ±30 volts ((8) above) and adjust the DRIVER TUNE and DRIVER OUTPUT COUPLING controls for maximum PWR AMPL GRID reading. The PWR AMPL GRID reading should be 45 ua or more. If the meter reading goes off scale during these adjustments, turn the INPUT LOADING control in a clockwise direction to obtain an on scale indication.

(14) Adjust the INPUT LOADING, DRIVER OUTPUT COUPLING, and DRIVER TUNE controls in turn until a peak PWR AMPL GRID current reading of 35 ±1 ua is obtained.

(15) Adjust the SCREEN VOLTS ADJ control for a PWR AMPL CATH meter reading of 21 ua. Adjust the PLATE TUNE and OUTPUT COUPLING controls for maximum reading on the wattmeter. Recheck the PWR AMPL GRID meter reading and if it has changed from 35 ua, readjust the INPUT LOADING control for 35 ua. If the PWR AMPL CATH meter reading exceeds 23 ua at any time during the procedure, adjust the SCREEN VOLTS ADJ control to reduce the reading to a value of 21 ua.

Note. Adjustment of the TRACKING ADJ control, covered (16) through (18) below, will rarely need to be done after initial setting. Readjust the TRACKING ADJ control only if, after the tuning procedure ((1) through (10) above), the PLATE TUNE dial indicates more than 15 channels off the correct channel.

(16) Tune the rf tuner PLATE TUNE control and the transmitter frequency controls (par. 95) to channel A100.

(17) Repeat the procedures given in (2) through (10) above.

(18) Set the PLATE TUNE control on channel A100 and adjust the TRACKING ADJ and OUTPUT COUPLING controls for maximum reading on the wattmeter.

Page 136, paragraph 105. Add subparagraph *b.1* after subparagraph *b:*

b.1. Tuning Radio Frequency Amplifier-Multiplier AM–1178/GRC (Channels D68 through D200).

(1) Connect Wattmeter ME–82/U to the ANTENNA jack.

(2) Set the rf tuner controls (fig. 89.1) and the transmitter frequency controls (par. 95) to the desired channel.

(3) Turn the SCREEN VOLTS ADJ control on the rf tuner completely counterclockwise. Place the power supply 750V ADJ switch (fig. 90) in position 1 and turn the 750V DC switch to ON.

(4) Tune the DRIVE TUNE on the transmitter control and MULTIPLIER GRID control on the rf tuner for maximum MULT GRID current.

(5) Vary the POWER AMPLIFIER PLATE tuning control to either side of the desired channel, and if an indication of power is obtained on the wattmeter, adjust the MULTIPLIER PLATE and POWER AMPLIFIER GRID controls for maximum reading on the wattmeter.

(6) If no indication of power is obtained on the wattmeter, change the power supply 750V ADJ switch to position 2; repeat the procedure given in (5) above.

Note. Even if no power output indication is obtained on the wattmeter proceed to (7) below.

(7) Change the power supply 750V ADJ switch to the position where the 750 ±40 volts is indicated on the DC VOLTS meter. Adjust the POWER AMPLIFIER PLATE, the POWER AMPLIFIER GRID, and the MULTIPLIER PLATE controls for a maximum reading on the wattmeter.

***Caution:* If the power output is not obtained on the wattmeter within 60 seconds after application of the 750 ±40 volts in (7) above, turn the 750V DC switch to the OFF position. Start again with the procedure given in (2) above.**

(8) Adjust the SCREEN VOLTS ADJ potentiometer for a PWR AMPL CATH current of 25 ua.

(9) Sequentially adjust the DRIVER OUTPUT COUPLING control in small increments and retune the DRIVER TUNE and MULTIPLIER GRID controls until a MULT GRID current of 30 to 45 ua is obtained.

(10) Similarly adjust the MULTIPLIER OUTPUT COUPLING, MULTIPLIER PLATE and the POWER AMPLIFIER GRID controls for a maximum PWR AMPL GRID current. If no PWR AMPL GRID current is obtained, tune for a maximum indication on the wattmeter.

(11) Check whether the PWR AMPL CATH current is 25 ±1 ua. If it is not, readjust the screen VOLTS ADJ control for a PWR AMPL CATH reading of 25 ua. Then repeat this procedure and those given in (9) and (10) above.

Page 138, paragraph 110. Make the following changes:

Subparagraph *a*, chart, "Position" column, opposite "OUTPUT ADJ control."

Delete and substitute: 25 (for operation in the A-band).
19 (for operation in the B-band).
15 (for operation in the C-band).
12 (for operation in the D-band).

Subparagraph *b*. Delete the first sentence and substitute: Set the controls of the receiver rf tuner to the position given in (1) below if the A-band tuner is used, to the position given in (1.1) if the B-band tuner is used, to the position given in (2) if the C-band tuner is used, or to the position given in (3) if the D-band tuner is used.

Designate the existing subaparagraph (1) (1.1).

Add subparagraph (1) after the first sentence.

(1) *Presetting Amplifier-Converter AM–1179/GRC controls.*

Control	Position
RF AMP control	To the red calibration mark nearest the desired frequency channel as indicated on the RF AMP dial.
INDEX control	For a centered position of the index line.
AFC control	0.

Add subparagraph (3) after subparagraph (2):

(3) Presetting Amplifier-Converter AM–1177/GRC controls.

Control	Position
AFC control	0.
OSC control	To the red calibration mark nearest the desired frequency channel as indicated on the OSC dial.
INDEX control	For a centered position of the index line.
RF AMP control	Same as the OSC dial.
FINE TUNING control	0.

Add paragraph 111.1 after paragraph 111:

111.1. Discriminator Alinement Procedure with 10-mc Crystal

Note. Perform this adjustment only when the receiver is first used with an A-band receiver tuner.

a. Because of the presence of an if preamplifier stage in the A-band tuner, the receiver bandwidth with this tuner is very narrow. It is therefore necessary for the receiver discriminator network Z111 to be tuned precisely to the

30-mc receiver intermediate frequency. A 10-mc crystal is supplied for use in the calibrator in place of the normal 11-mc crystal. With this crystal, the calibrator produces harmonics of 10 mc, the third harmonic of which is used to provide an accurate 30-mc signal source for this alinement procedure.

b. To aline the receiver discriminator with the 10-mc crystal, proceed as follows:

(1) Replace the 11-mc crystal of the receiver calibrator with the 10-mc crystal.

(2) Set the receiver POWER switch to the ON position. Allow the receiver to warm up for 10 minutes before proceeding.

(3) Disconnect the cable from if input jack J113 (fig. 238). Also disconnect the cable from calibrator output jack J110 (fig. 250).

(4) Connect Radio Frequency Cable Assembly CG–789A/U with Adaptor UG–491A/U on one end from the CAL OUT jack (J110) to input jack J113 of the if amplifier.

(5) Hold the AFC-OFF-CAL switch in the CAL position.

(6) Turn the receiver MEASURE switch to the SIG LEV position and note that the reading is greater than 15 microamperes. If the reading does not decrease when the AFC-OFF-CAL switch is released, check the crystal calibrator unit of the receiver (par. 353).

(7) Tune the slug in the top of discriminator network Z111 (fig. 235) to adjust L132 until the FREQ DRIFT meter reads zero.

(8) Remove the 10-mc crystal and the test cable from the receiver. Replace the crystal in the mounting socket inside the A-band tuner.

(9) Replace the 11-mc crystal in the receiver calibrator and, if necessary, retune the calibrator to its original condition.

Caution: **Do not tune any other alinement screws in the if amplifier or the limiter, discriminator, and afc plug-in assemblies, except the one required in (7) above.**

(10) Leave the receiver power switch at the ON position, and proceed immediately to the adjustment of the receiver afc circuit.

Page 139, paragraph 113*a*(5). Delete subparagraph (5) and substitute:

(5) When using the A-band tuner (Amplifier-Converter AM–1179/GRC) or the B-band tuner (Amplifier-Converter AM–913/TRC), follow the procedure outlined below. When using the C-band tuner, refer to (6) below; when using the D-band tuner, refer to (6.1) below.

Page 140, paragraph 113. Make the following changes: Subparagraph *a.* Add subparagraph (6.1) after subparagraph (6).

(6.1) When using the D-band tuner (Amplifier-Converter AM–1177/GRC), follow the procedure outlined below.

(*a*) Adjust the OSC control (fig. 95.1) until the red calibration marking nearest the desired rf channel marking coincides with the index line.

(*b*) Adjust the RF AMP control until an rf channel marking that corresponds approximately to the frequency of the desired red calibration marking ((*a*) above) on the OSC dial coincides with the index line on the RF AMP dial.

(*c*) Hold the AFC-OFF-CAL switch to the CAL position and adjust the OSC control until the FREG DRIFT meter reads zero. Check to see that for a small clockwise rotation of the OSC control, the FREQ DRIFT meter deflects to the left from zero, and that for counterclockwise rotation, the deflection is to the right. Reset the control for a meter reading of zero.

(*d*) Adjust the RF AMP control for a maximum reading on the MEASURE meter; adjust the FINE TUNING control for a maximum reading on the same meter.

(*e*) Release the AFC-OFF-CAL switch to the OFF position.

(*f*) Adjust the OSC control so that the desired channel coincides with the index line.

(*g*) Adjust the RF AMP control in a like manner.

(*h*) Adjust the FINE TUNING control for a maximum noise reading on the MEASURE meter. Readjust the RF AMP control for a peak reading.

Subparagraph *b*(8). Delete subparagraph (8) and substitute:

(8) When using the A-band tuner (Amplifier-Converter AM–1179/GRC) or the B-band tuner (Amplifier-Converter AM–913/TRC), follow the procedure outlined below. When using the C-band tuner, refer to (9) below; when using the D-band tuner, refer to (9.1) below.

Add subparagraph (9.1) after subparagraph (9):

(9.1) When using the D-band tuner (Amplifier-Converter AM–1177/GRC), follow the procedures outlined below.

(*a*) Adjust the OSC and RF AMP controls to the desired rf channel.

(*b*) Tune the OSC control so that the FREQ DRIFT meter reads zero. Check to see that a slight clockwise rotation causes a meter deflection to the left and that counterclockwise rotation causes deflection to the right. Turn off the transmitter. Do not readjust the OSC control.

(*c*) Adjust the tuner INDEX control until the index line is coincident with the desired rf channel marking.

(*d*) Operate the receiver MEASURE switch to the 2ND LIM position.

(*e*) Adjust the RF AMP control for a maximum noise reading on the MEASURE meter. Adjust the FINE TUNING control in a like manner, and then retune the RF AMP control for a peak reading. (Do not readjust the OSC control.)

Page 141, paragraph 114. Subparagraph *g*. Delete subparagraph *g* and substitute:

g. Position the AFC knob to zero and adjust the FREQ DRIFT meter to zero by means of the RF AMP control if the A-band or B-band tuner is used, the OSC FINE control if the C-band tuner is used, or the OSC control if the D-band tuner is used.

Subparagraph *i*, line 1. After "C-band," add: or D-band.

Subparagraph *p*. Delete the second sentence and substitute: If the receiver AFC control is off zero by more than ±2 divisions, adjust the RF AMP control if the A-band or B-band tuner is used, the OSC FINE control if the C-band tuner is used, or the OSC control if the D-band tuner is used.

Page 143, paragraph 118*b*(3). Delete subparagraph (3) and substitute:

(3) Adjust the MOD ADJ control for a 0-db reading on the transmitter MEASURE meter when the C-band or D-band tuner is used, and for a ±2-db reading when the A-band or B-band tuner is used.

Page 144, paragraph 118*c*(2). Delete subparagraph (2) and substitute:

(2) Adjust the MOD ADJ control for a 0-db indication on the transmitter MEASURE meter if the C-band or D-band tuner is used, or for a ±2-db indication if the A-band or B-band tuner is used.

Page 145, paragraph 119. Make the following changes:

Subparagraph *b*(2), line 7. After "C-band," add: or D-band.

Last line. Change "B-band" to: **A-band or B-band.**

Subparagraph *c*(2), line 7. After "C-band," add: or D-band.

Line 8. Change "B-band" to: **A-band or B-band.**

Page 146, paragraph 120*b*(5). Delete subparagraph (5) and substitute:

(5) The normal operating reading on the power supply DC VOLTS meter is approximately +800 volts when the A-band tuner is used, approximately +850 volts when the B-band tuner is used, and approximately +750 volts when the C-band or D-band tuner is used.

Page 147, paragraph 121*b*, chart, "Normal indication on meter" column. Make the following changes:

Opposite "MOD 1KC IN" position. Delete and substitute: 0 db for C-band or D-band operation; +2 db for A-band or B-band operation.

Opposite "MULT GRID" position. Delete and substitute: 30–40 ua for C-band tuner; and 30–45 ua for D-band tuner (not used for A-band or B-band tuner).

Opposite "MULT CATH" position. Delete and substitute: 14 ua or lower for C-band tuner; and 10–25 ua for D-band tuner (not used for A-band or B-band tuner).

Opposite "PWR AMPL GRID" position. Change "B-band" to: **A-band or B-band.**

Add after the last entry: 0–30 ua for D-band.

Opposite "PWR AMPL CATH" position. Add before the first entry: 21 ua maximum for A-band.

After "C-band," add: or D-band.

Page 148, paragraph 121*b*, chart, "Normal indication on meter" column, opposite "750 LOWER SCALE" position. Make the following changes:

Add before the first entry: 800 volts for A-band tuner.

Add after the last entry: 750 volts for D-band tuner.

Page 153, paragraph 132*a*, last line. Change "C-band tuner" to: **A-, C-, and D-band tuners.**

Lubricant	Interval
PL Special, Lubricating Oil, General Purpose, Preservative (MIL–L–6085A).	
All temperatures	A—1 year.
GL–GREASE, Aircraft and Instruments (MIL–G–3278).	
All temperatures	D—Dismantling.

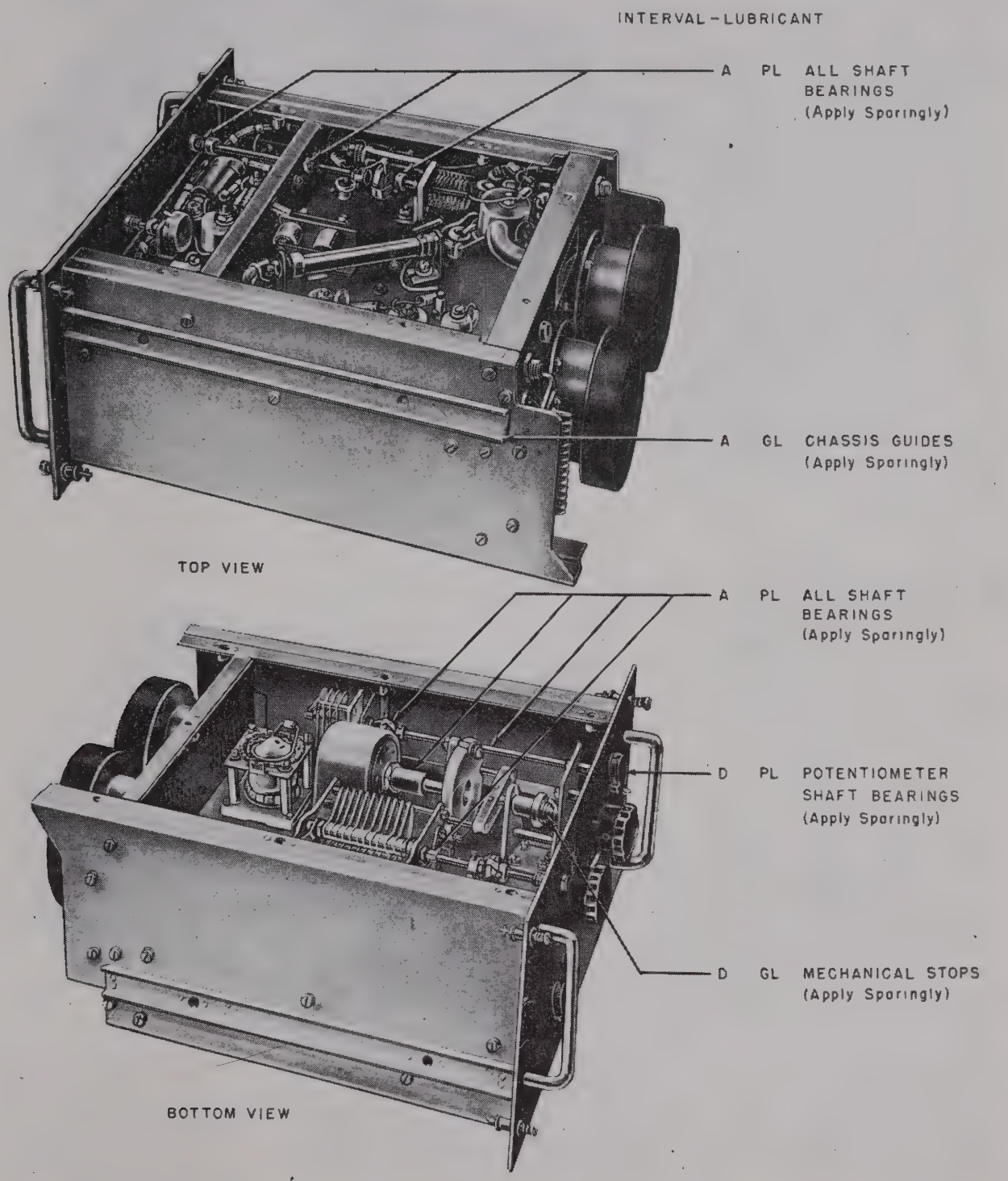

Figure 102.1. (Added) *Lubrication of Radio Frequency Amplifier AM–1180/GRC, covers removed.*

Page 162, figure 104. Make the following changes:

Delete reference to "CAVITY CONTACT SURFACES".

In Chart, "LUBRICANT" column, delete line beginning "GL-GREASE".

In Chart, "Interval" column, delete "D-Dismantling".

Page 164, figure 108. Delete figure 108.

Lubricant	Interval
PL Special, Lubricating Oil, General Purpose, Preservative (MIL–L–6085A). All temperatures	A—1 year. D—Dismantling.

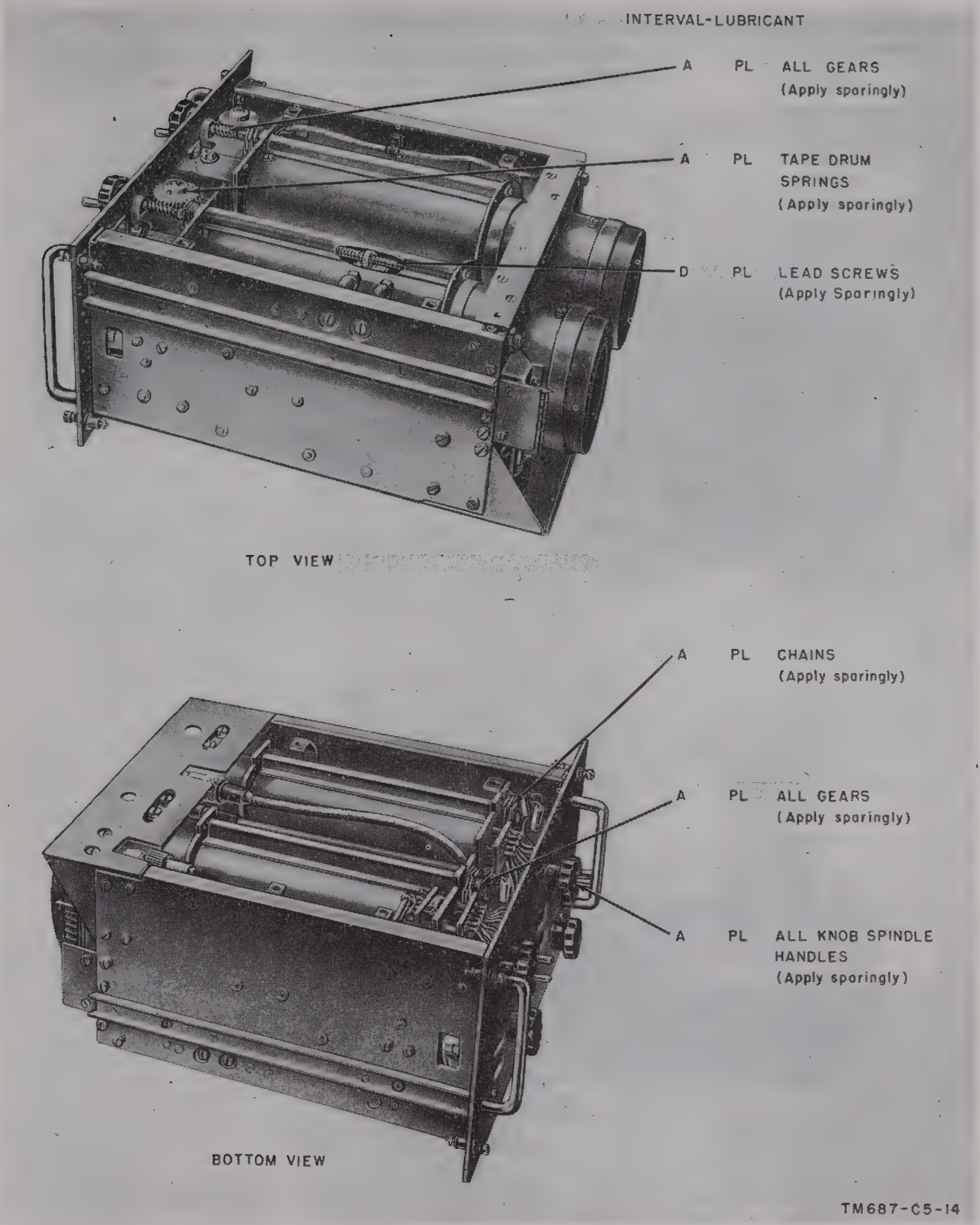

Figure 108.1. (Added) *Lubrication of Radio Frequency Amplifier-Multiplier AM–1178/GRC, covers removed.*

Lubricant	Interval
PL Special, Lubricating Oil, General Purpose, Preservative (MIL–L–6085A). All temperatures	A—1 year.

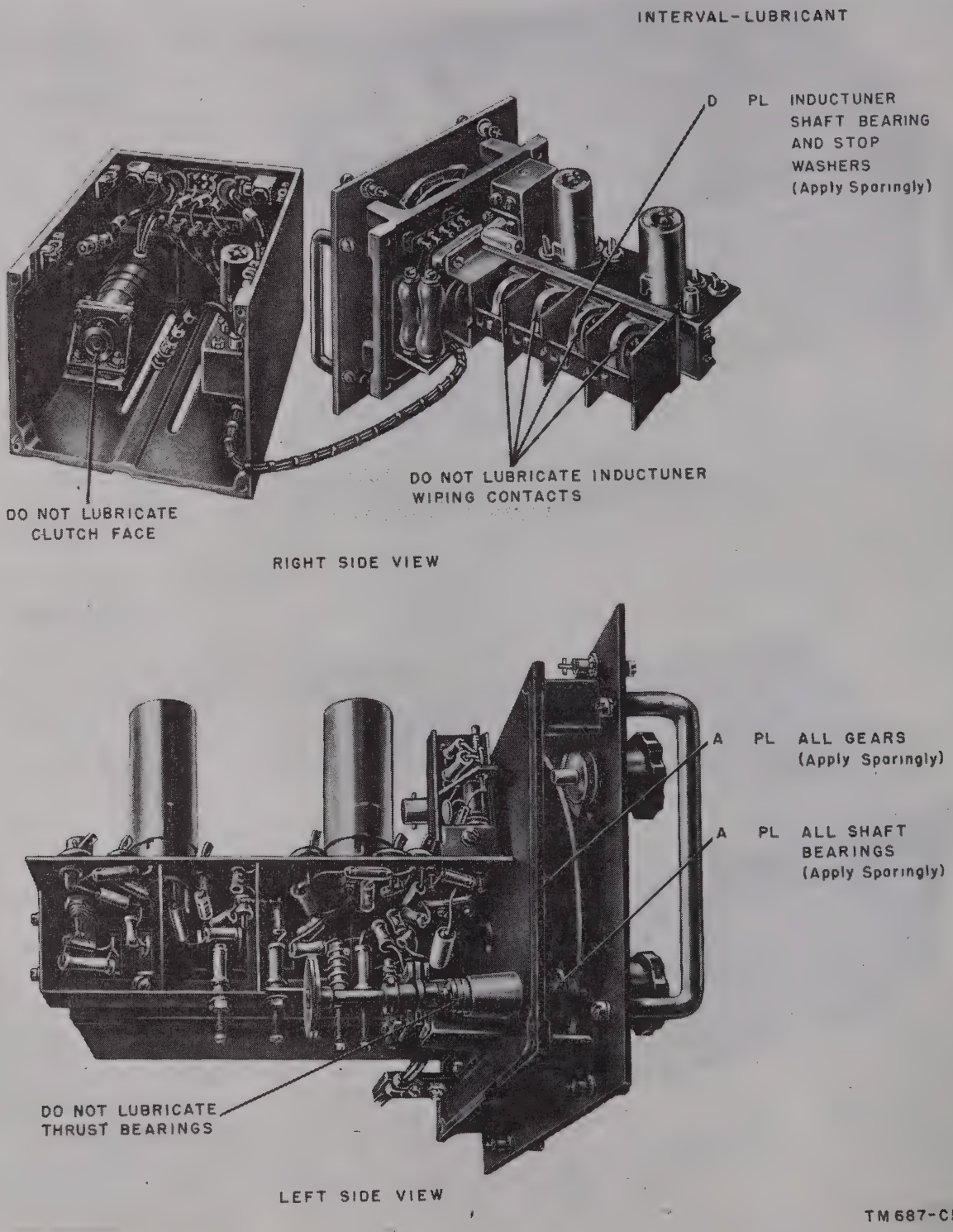

Figure 116.1. (Added) *Lubrication of Amplifier-Converter AM–1179/GRC, side views.*

Page 170, figure 118. Delete reference to "BALL THRUST BEARING".

Lubricant	Interval
PL Special, Lubricating Oil, General Purpose, Preservative (MIL–L–6085A). All temperatures	A—1 year.

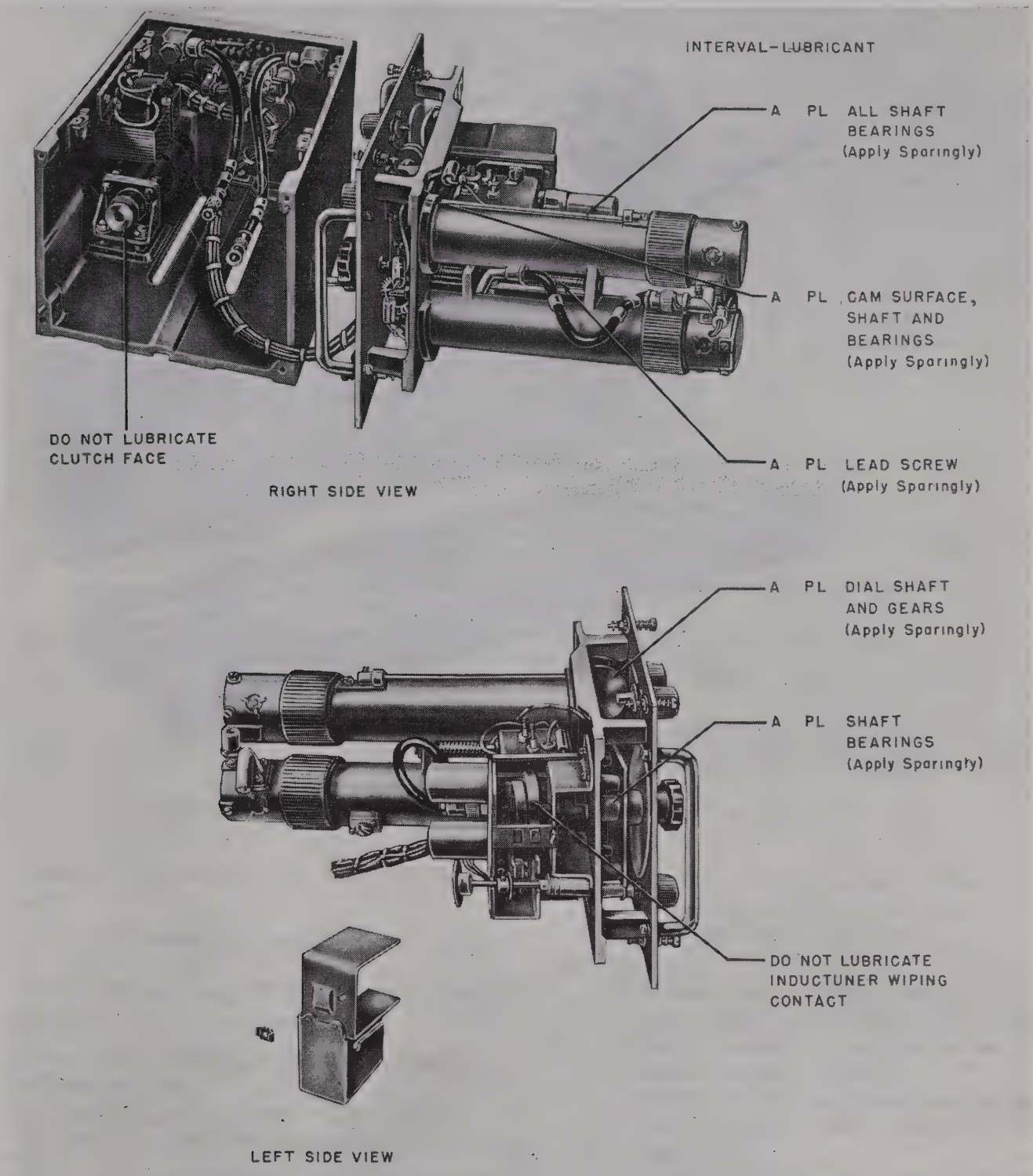

Figure 118.1 (Added) *Lubrication of Amplifier-Converter AM-1177/GRC, side veiws.*

Lubricant	Interval
All temperatures. PL Special, Lubricating Oil, General Purpose, Preservative (MIL–L–6085A).	A—1 year.

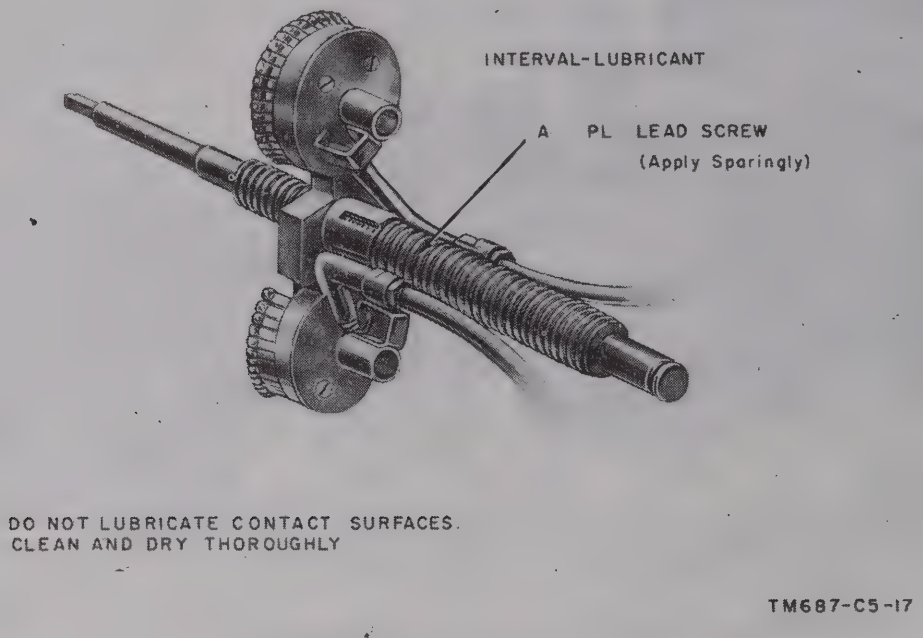

Figure 118.2. (Added) *Lubrication of Amplifier-Converter AM–1177/GRC shorting plunger, disassembled.*

Lubricant	Interval
PL Special, Lubricating Oil, General Preservative (MIL–L–6085A). All temperatures GI–GREASE, Aircraft and Instruments (MIL–G–3278). All temperatures.	A—1 year.

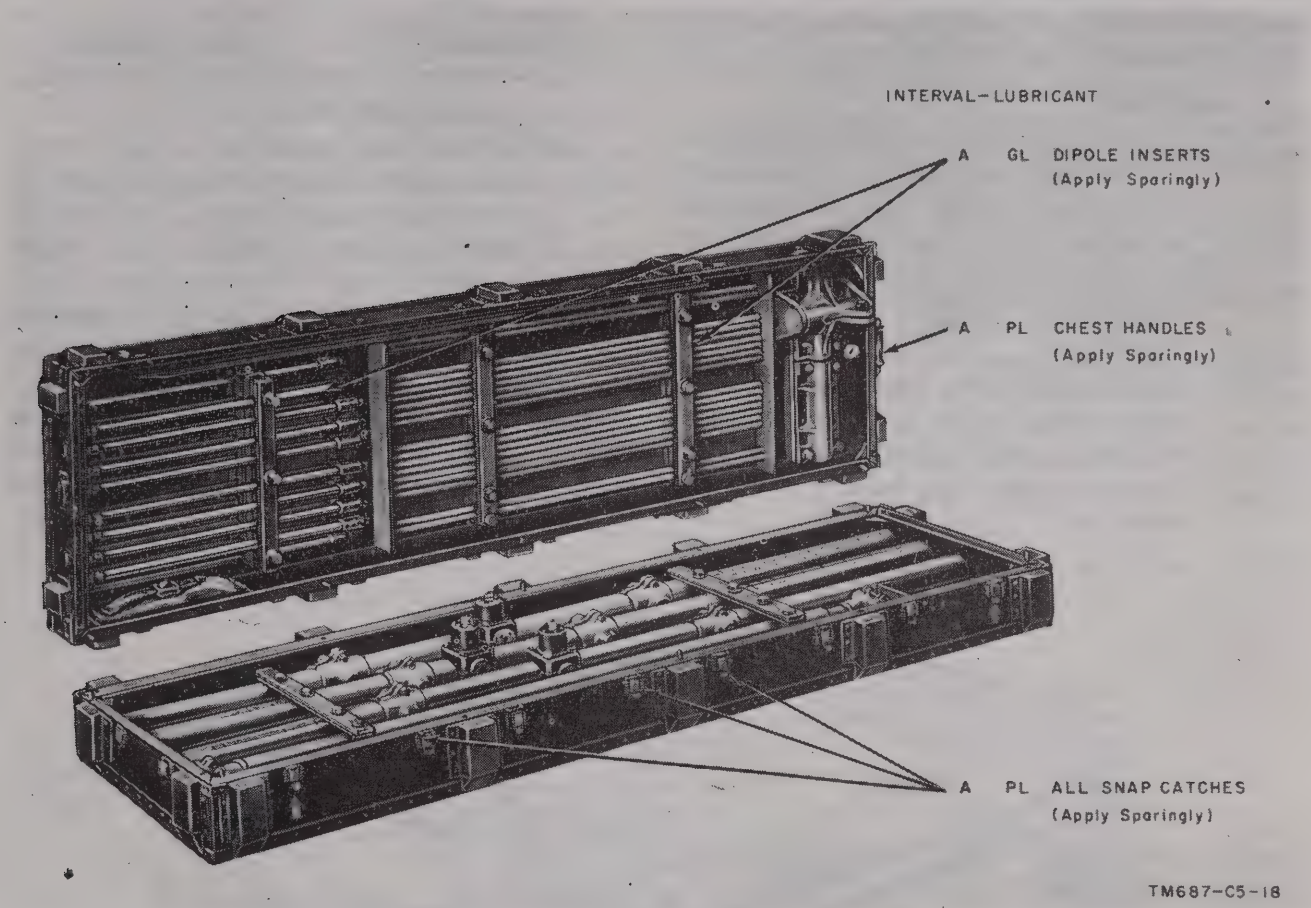

Figure 119.1. (Added) *Lubrication of transmitter and receiver antennas, band-A.*

Page 171, figure 120. Add "band C" to the caption.

Page 172, paragraph 139*b*(3), line 3. Change "118" to: **118.2.**

Page 173, paragraph 142*a*(3), line 2. Change "breakdown" to: **break down.**

Page 175, paragraph 148*a*(1). Make the following changes:

Line 10. After "C-band," add: or D-band.
Line 11. After "B-band," add: or A-band.

Page 176. Add paragraph 148.1 after paragraph 148:

148.1. Removal and Replacement of Tube 4X–150A from Radio Frequency Amplifier-Multiplier AM–1178/GRC

a. Removal.

(1) Remove the rf tuner from the transmitter (par. 165). The 4X150A tube is shown installed in the transmitter D-band rf tuner in figure 123.1.

(2) Rotate the insulated tube retainer so that it will not obstruct the top of the tube.

(3) Squeeze the prongs of the tube puller together (fig. 123) until they are the

same distance apart as the slots at the sides of the tube.

(4) Push the prongs of the tube puller into the slots at the sides of the tube until the prong lips are behind the plate ring of the tube. Be careful not to bend the cooling fins of the tube when inserting the tube puller.

(5) Pull the tube out by using the tube puller.

b. Replacement.

(1) A black arrow marks the keyway location on the outside of the tube socket and, on most tubes, the key position is marked on the anode structure of the tube. Carefully position a replacement tube so that it is alined with the keyway.

(2) Press the tube into the socket with an even pressure after it is certain that the tube is properly positioned. *Do not rotate the tube after the key has been positioned.*

(3) Rotate the insulated tube retainer until it is positioned over the center of the tube.

Page 177. Add paragraphs 150.1 and 150.2 after paragraph 150:

150.1. Removal and Replacement of Tube 4X150A from Radio Frequency Amplifier AM–1180/GRC

a. Removal.

(1) Remove the rf tuner from the transmitter (par. 165).

(2) Release the seven cam-lock fasteners that secure the bottom cover plate to the chassis (par. 155*c*). The 4X150A tube is shown installed in the transmitter A-band rf tuner in figure 123.2.

(3) Free the prongs of the tube retaining spring from the latch and rotate the retaining spring out of the way.

(4) Squeeze the prongs of the tube puller together (fig. 123) until they are the same distance apart as the slots at the sides of the tube.

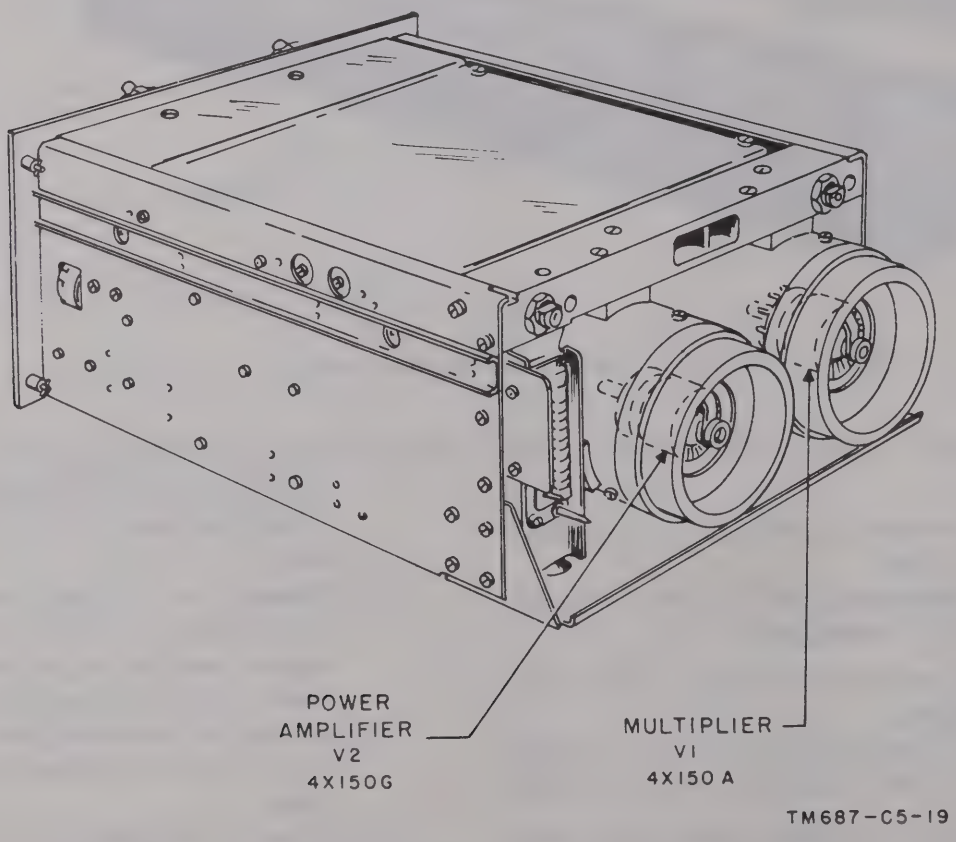

Figure 123.1. (Added) *Transmitter rf tuner tube location, band-D.*

(5) Push the prongs of the tube puller into the slots at the sides of the tube until the prong lips are behind the plate ring of the tube. Be careful not to bend the cooling fins of the tube when inserting the tube puller.

(6) Pull the tube out by using the tube puller.

b. Replacement.

(1) A red dot marks the keyway location on the outside of the tube socket and, on most tubes, the key position is marked on the anode structure of the tube. Carefully position a replacement tube so that it is alined with the keyway.

(2) Press the tube into the socket with an even pressure after it is certain that the tube is properly positioned. *Do not rotate the tube after the key has been positioned.*

(3) Rotate the tube retaining spring down into position over the tube and insert the prongs under the latch.

(4) Replace the bottom cover plate and secure it by means of the seven cam-lock fasteners.

150.2. Removal and Replacement of Tube 4X150G from Radio Frequency Am-Amplifier-Multiplier AM–1178/GRC

a. Removal.

(1) Remove the rf tuner from the transmitter (par. 165). The 4X150G tube is shown installed in the transmitter D-band rf tuner in figure 123.1.

(2) Rotate the insulated tube retainer aside so that it will not obstruct the top of the tube.

(3) Squeeze the prongs of the tube puller together (fig. 123) until they are the same distance apart as the slots at the sides of the tube.

(4) Push the prongs of the tube puller into the slots at the sides of the tube until the prong lips are behind the plate ring of the tube. Be careful not to bend the cooling fins of the tube when inserting the tube puller.

(5) Pull the tube out by using the tube puller.

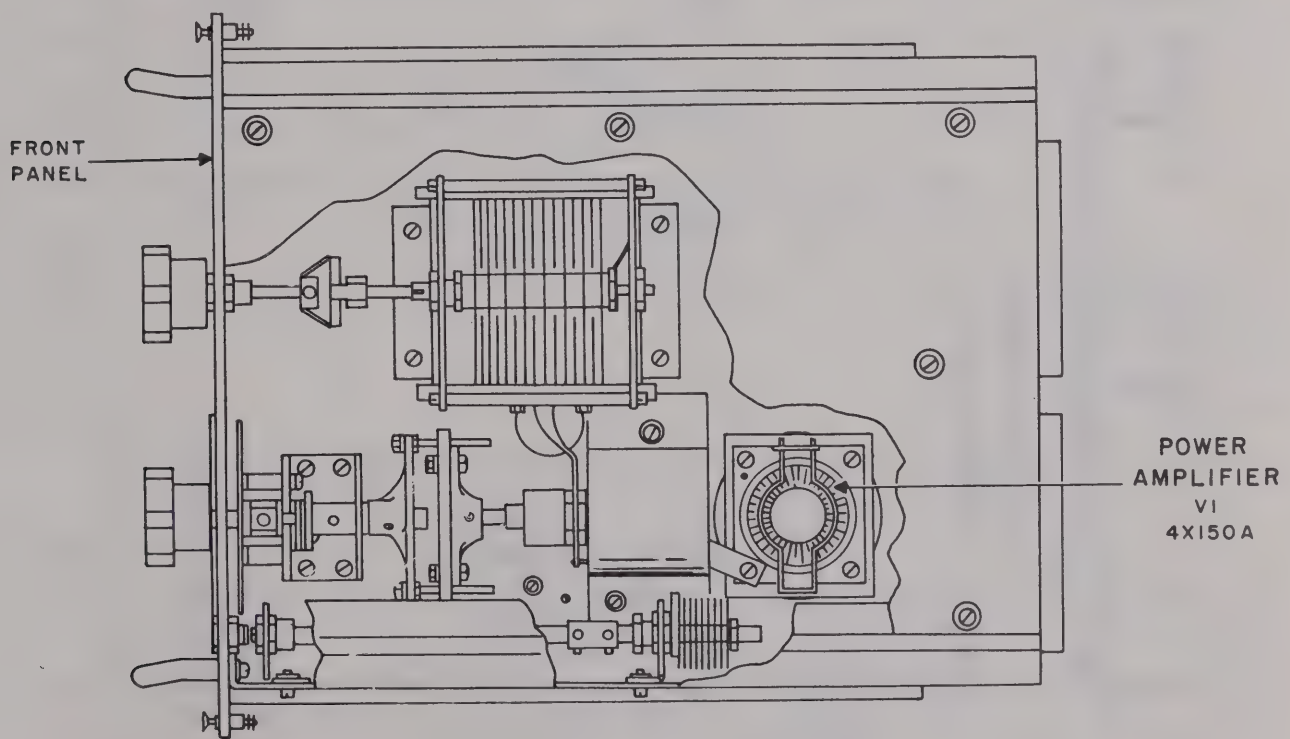

Figure 123.2 (Added) *Transmitter rf tuner tube location, band A.*

b. Replacement.

(1) Push the tube into its socket. It is not necessary to position the tube with a key because the base of the tube engages concentric contact rings in the tube socket.

(2) Rotate the insulated tube retainer until it is positioned over the center of the tube.

Add paragraph 151.2 after paragraph 151.1 (page 3 of C 2) :

151.2. Removal and Replacement of Tube 5768 from Amplifier-Converter AM–1177/GRC

a. Removal.

(1) Remove the rf tuner from the receiver (par. 165).

(2) Release the four cam-lock fasteners that secure the cover plate to the top of the tuner (fig. 133.2).

(3) Using the $\frac{5}{16}$-inch open end wrench (mounted at the rear of the running spares panel on the D-band filter case), remove the four cap screws which secure the front casting (behind the front panel) to the black casting. Remove cable harness from cable clamp located at the top side edge of black casting.

(4) Pull the front casting forward out of the frame.

(5) Unscrew and remove the caps from each rf amplifier cavity. Grasp the exposed half of the tubes and pull them out of the cap.

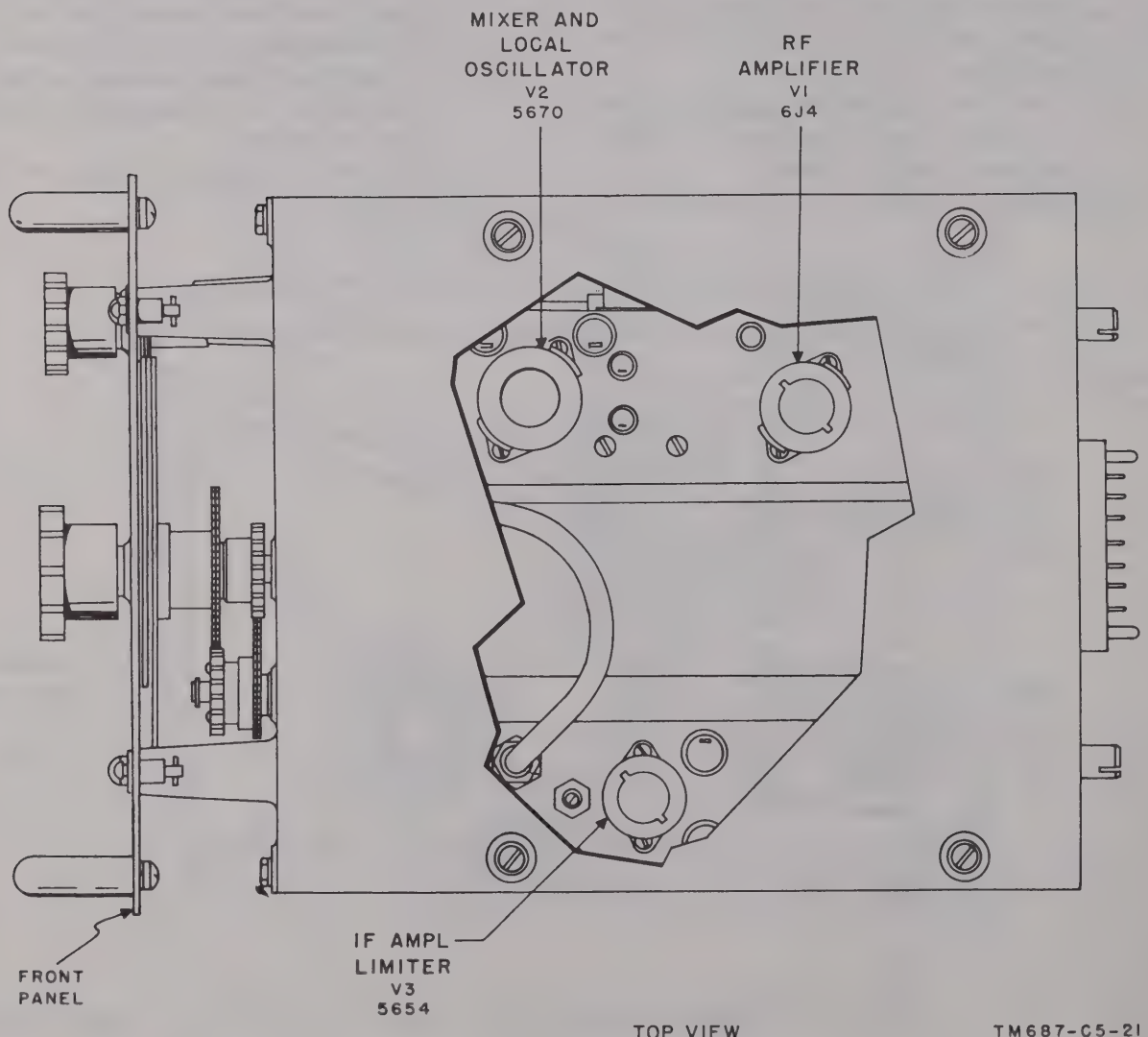

Figure 131.1. (Added) *Amplifier-Converter AM–1179/GRC, tube location.*

Note. Do not use levers to pry the tubes loose.

b. Replacement.

(1) Insert the coaxial pin end of the replacement tube into the socket in the cap. Seat the grid ring of the tube flush with the tube clamp.

(2) Aline the locating pins in the cap with the slots in the cavity, and screw the cap down into place.

(3) Return the front casting to the frame and replace the cap screws.

(4) Return the cable harness to the cable clamp.

(5) Replace the top cover plate and secure the cam-lock fasteners.

Page 178, figure 124. Add "bands B and C" to the caption.

Page 194, paragraph 179, chart, "Item" column:

Item No. 18. Delete and substitute: Receiver rf tuner.

Item No. 20. Delete and substitute: Transmitter rf tuner.

Page 195, paragraph 179, chart. Make the following changes:

"Normal indication" column, item No. 30, second entry. Delete and substitute: DC VOLTS meter M2 of power supply reads 800 volts if A-band tuner is used in the transmitter, 850 volts if B-band tuner is used, and 750 volts if C-band or D-band tuner is used.

"Corrective measures" column, item No. 30, seventh entry. Delete and substitute: Adjust 750V ADJ switch S2 until meter M2 reads proper voltage.

Page 197, paragraph 179, chart, "Normal indication" column, item No. 56. Delete the second sentence and substitute: Normal meter indication 0 db if C-band or D-band tuner is used and +2 db if A-band or B-band tuner is used.

Page 198, paragraph 179, chart. Add the following after item No. 63: Items 63.1 through 63.6 below apply when the transmitter is equipped with Radio Frequency Amplifier AM–1180/GRC.

	Item No.	Item	Action or condition	Normal indication	Corrective measures
EQUIPMENT PERFORMANCE	63.1	TEST switch S104	Operated to PWR AMPL GRID position.		
	63.2	DRIVER TUNE control L110.	Adjusted for max reading on TEST meter of approximately 22 ua.	TEST meter reading varies as control is operated.	Replace tube V1. Check for agreement of dial position of RF CHAN TUNE and DRIVER TUNE controls. Check for filament supply on tube V1.
	63.3	DRIVER OUTPUT COUPLING CONTROL.	Adjusted to provide TEST meter indication of 22 ua.	TEST meter reading varies as control is operated.	Same as item 63.2 above.
	63.4	TEST switch S104	Operated to PWR AMPL CATH position.		
	63.5	PLATE TUNE control of rf tuner.	Adjusted for min. reading on TEST meter; not to exceed 23 ua.	Wattmeter ME–82/U indicates maximum reading.	Replace tube V1.
	63.6	OUTPUT COUPLING control of rf tuner.	Adjusted for min. reading on TEST meter not to exceed 23 ua.	Wattmeter ME–82/U indicates maximum reading.	Replace tube V1.

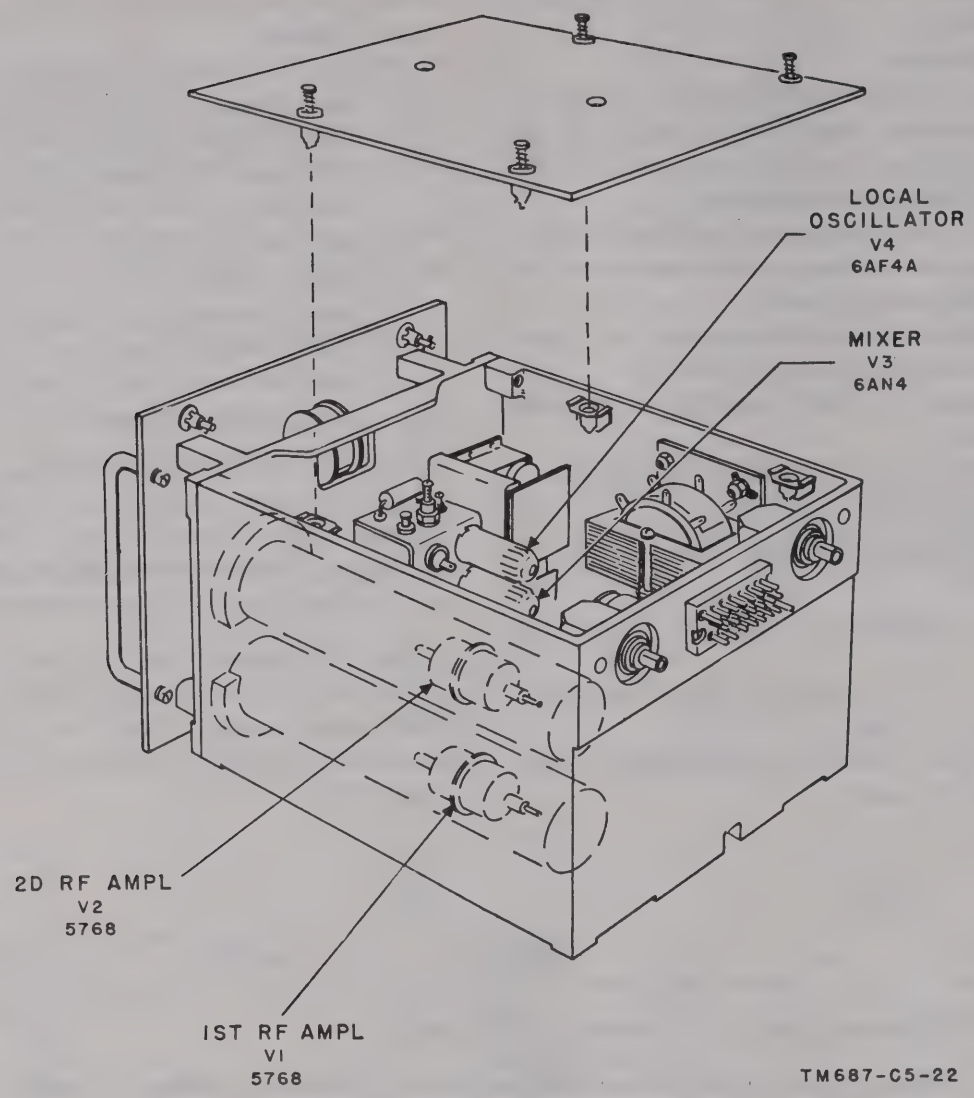

Figure 133.1. (Added) *Amplifier-Converter AM–1177/GRC, tube location.*

Page 199, paragraph 179, chart. Add the following after item No. 82: Items 82.1 through 82.11 below apply when the transmitter is equipped with Radio Frequency Amplifier-Multiplier AM–1178/GRC.

	Item No.	Item	Action or condition	Normal indication	Corrective measures
EQUIPMENT PERFORMANCE	82.1	TEST switch S104	Operated to MULT GRID position.		
	82.2	DRIVER TUNE control L110.	Adjusted for maximum reading on TEST meter.	TEST meter reading varies as control is adjusted.	CHECK for agreement of dial positions of RF CHAN TUNE and DRIVER TUNE controls. Replace tube V1. Check for filament supply on tube V1.

	Item No.	Item	Action or condition	Normal indication	Corrective measures
EQUIPMENT PERFORMANCE	82.3	DRIVER OUTPUT COUPLING control.	Adjusted to provide TEST meter indication of 30–45 ua.	TEST meter reading varies as control is adjusted.	Same as item No. 82.2 above.
	82.4	MULTIPLIER GRID control of rf tuner.	Adjusted for maximum reading on TEST meter.	TEST meter reading varies as control is operated.	Same as item No. 82.2 above.
	82.5	TEST switch S104_____	Operated to MULT CATH position.		
	82.6	MULTIPLIER PLATE control of rf tuner.	Adjusted for minimum reading on TEST meter.	Wattmeter ME–82/U indicates maximum reading.	Replace tube V1.
	82.7	TEST switch S104_____	Operated to PWR AMPL GRID position.		
	82.8	MULTIPLIER OUTPUT control of rf tuner.	Adjusted so that TEST meter reads maximum.	Test meter reading varies as control is operated.	Replace tube V2.
	82.9	POWER AMPLIFIER GRID control of tuner.	Adjusted so that TEST meter reads maximum.	TEST meter reading varies as control is operated.	Replace tube V2.
	82.10	TEST switch S104_____	Operated to PWR AMPL CATH position.		
	82.11	POWER AMPLIFIER PLATE control of tuner.	Adjusted for maximum indication on watt-meter.		
	82.12	AMPLIFIER OUTPUT COUPLING control of rf tuner.	Adjusted for maximum indication on watt-meter.	Rf output, with TEST meter reading of 23 ua should be at least 50 watts.	Replace tube V2.

Page 201, paragraph 179, chart. Make the following changes: Delete item No. 109 and substitute:

Item No.	Item	Action or condition
109	A-band tuner (if used)_____	Adjust RF AMP dial to the red calibration markings nearest desired channel (same channel to which transmitter is tuned).
	B-band tuner (if used)_____	Adjust RF AMP dial to the red calibration markings nearest desired channel (same channel to which transmitter is tuned).
	C-band tuner (if used)_____	Adjust RF AMP and OSC dials to the red calibration markings nearest desired channel (same channel to which transmitter is tuned).
	D-band tuner (if used)_____	Adjust RF AMP and OSC dials to the red calibration markings nearest desired channel (same channel to which transmitter is tuned).

Item No. 112, "Item" column. Delete and substitute: OSC control of C-band or D-band tuner or RF AMP control of A-band or B-band tuner.

Page 206, paragraph 186.

Subparagraph *a*, line 3. Change "100 to 400" to: **50 to 600.**

Subparagraph *b* (1), line 10. Delete the fifth and sixth sentences and substitute: The output frequency of the oscillator is applied to the A-band, B-band, C-band, or D-band rf tuner. When the A-band tuner is used, there is no frequency multiplication. When the B-, C-, or D-band is used, the output frequency of the rf oscillator is doubled before being applied to the tuner. The B-band tuner serves as a straight amplifier, the C-band tuner provides an additional frequency-doubler

stage, and the D-band tuner, a frequency-tripler stage.

Subparagraph (2). Delete subparagraph (2) and substitute:

(2) The frequency range of the relay system is 50 to 600 megacycles. The range from 50 to 100 megacycles is designated the A-band; the range from 100 to 225 megacycles is the B-band; the range from 225 to 400 megacycles is the C-band; and the range from 400 to 600 megacycles is the D-band. The band in which the system operates is determined by the rf tuner used.

Page 207, paragraph 186*c*(2), line 4. Change "B-band or the C-band" to: **A-band, B-band, C-band, or D-band.**

Page 208. Delete paragraph 187 and substitute:

187. General

The transmitter circuits consist of the following components: Radio Transmitter T–302/TRC; Radio Frequency Amplifier AM–1180/GRC, Radio Frequency Amplifier AM–912/TRC, Radio Frequency Amplifier-Multiplier AM–915/TRC, or Radio Frequency Amplifier-Multiplier AM–1178/GRC; the dummy filter or one of the band-pass filters of Filter Kit MK–236/GRC, Filter Kit MK–123/TRC, Filter Kit MK–124/TRC or Filter Kit MK–228/GRC; Antenna AS–756/GRC, Antenna AS–639/TRC, Antenna AS–640/TRC, or Antenna AS–755/GRC; Power Supply PP–685/TRC; Autotransformer Fixed Power Transformer TF–167/TRC; Interconnecting Box J–532/U; and Switch Box SA–331/U. A brief description of the function of the transmitter circuit is contained in paragraph 186*b*. The block diagram of the transmitter circuits is shown in figure 136. A detailed discussion of the block diagram is contained in paragraphs 188 through 213.

Figure 136. (Contained in separate envelope.) Make the following changes:

Change note 1 to: **THE B-BAND RF TUNER IS REPLACEABLE BY THE A-BAND, C-BAND, OR D-BAND RF TUNER FOR OPERATION IN THE CORRESPONDING BAND.**

Delete the blocks labeled "B-BAND R-F TUNER" and "C-BAND R-F TUNER" and substitute the detail shown below.

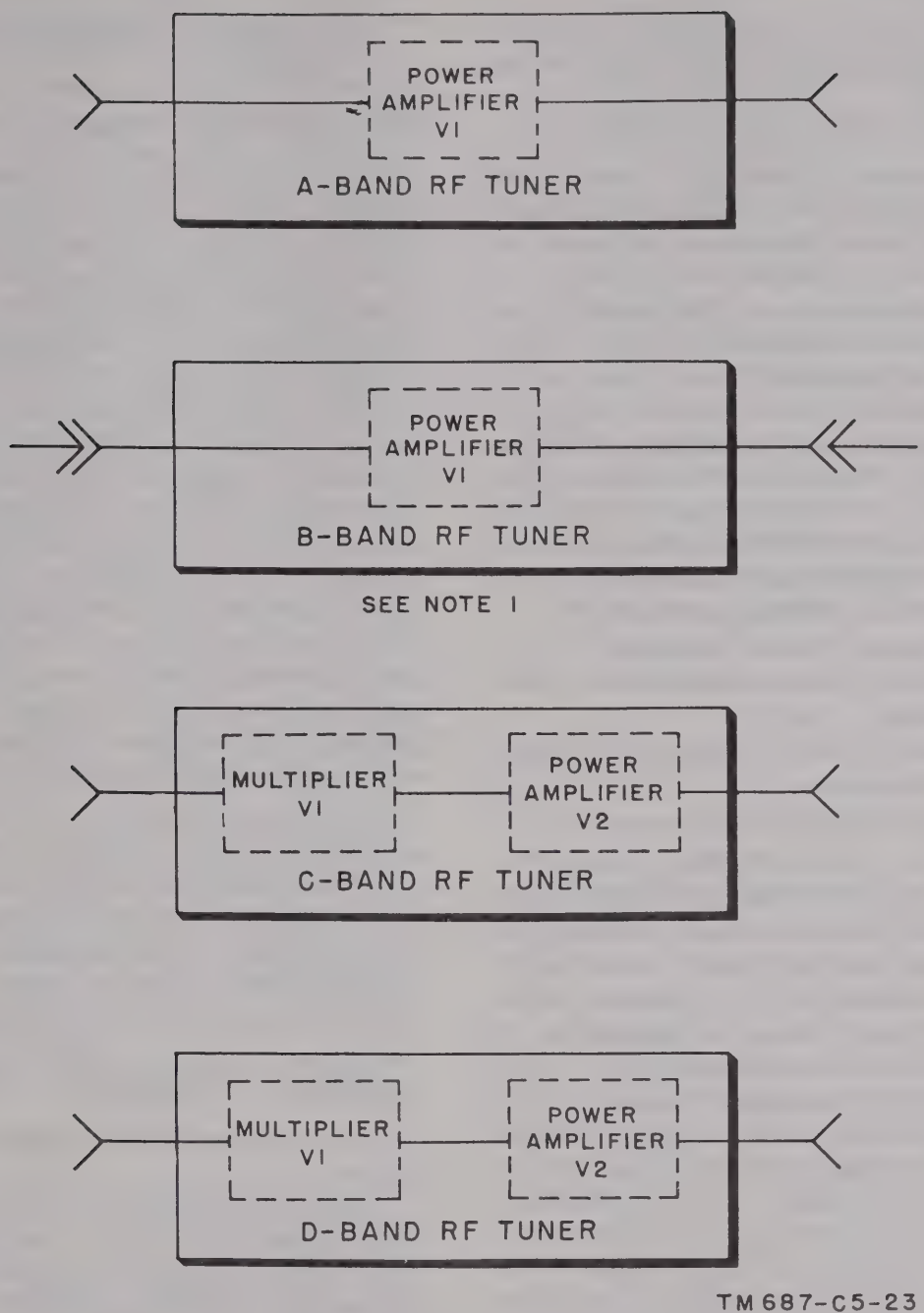

Figure A. Change to figure 136.

Page 209, paragraph 193. Delete the second sentence and substitute:

When the transmitter is operating in the A-band, the driver operates as a straight amplifier over the 50- to 100-megacycle portion of its frequency range. When the transmitter is operating in the B-, C-, or D-band, the driver operates as a class C frequency doubler and the output of the driver covers the 100- to 225-megacycle portion of its frequency range.

Paragraph 194. Make the following changes:

Subparagraph *a*. Delete subparagraph *a* and substitute:

a. General. Four types of rf tuners are available. One tuner covers the A-band, another the B-band, the third the C-band, and the last, the D-band. These tuners are plug-in units and are interchangeable. Replacement of one type of rf

tuner with another type changes the output frequency of the transmitter. The tuners are described below.

Add subparagraph *a.1* after subparagraph *a*:

a.1. Transmitter A-Band Rf Tuner. Radio Frequency Amplifier AM–1180/GRC is the transmitter A-band tuner. The A-band rf tuner consists of one power amplifier that operates over the driver frequency range of 50 to 100 megacycles. The circuit employed is a class C amplifier. In this frequency range, the required circuit constants can be obtained by the use of resistors, capacitors, and inductors of the conventional type. Resonant cavities such as those employed in the B-, C-, and D-band tuners are not necessary. The detailed analysis of the A-band tuner is contained in paragraph 220.1.

Subparagraph *b*, heading. Delete "*and.*"

Line 5. Change "same frequency as the driver" to: **100- to 225-mc portion of the driver frequency range.**

Subparagraph *c*, line 5. Change "the alternate" to: **an alternate.**

Add subparagraph *d* after subparagraph *c*:

d. Transmitter D-Band Rf Tuner. Radio Frequency Amplifier-Multiplier AM–1178/GRC is the transmitter D-band rf tuner. When this tuner is plugged into the circuit, the output of the driver is applied to the frequency-tripler stage of the tuner. When the transmitter is operating in the D-band, the driver is not tuned over its full range. The output frequency of the driver on the D-band covers only that portion of the driver tuning range that is between 133 and 200 mc. The output of tuner frequency-tripler tube V1 is three times the frequency of its input, and therefore, covers the range of 400 to 600 mc. This output is applied to the power amplifier stage, tube V2. A detailed description of the D-band tuner is given in paragraphs 224.1 through 224.3.

Paragraph 195*a*. Make the following changes:

Line 3. Change "12" to: **22.**

Line 6. Delete the third and fourth sentences and substitute:

Six of the band-pass filters for each are supplied to cover the A-, B-, and C-bands; four band-pass filters are supplied to cover the D-band. Each of the band-pass filters is tunable within a different portion of its respective band.

Paragraph 197. Delete paragraph 197 and substitute:

197. Functioning of Antenna

The transmitting antenna is identical with the receiving antenna and may be mounted on the same mast with it. Two Yagi arrays, each consisting of a dipole radiator, a dipole director, and a dipole reflector, are provided with the A-band antenna system. These antenna arrays may be used separately, one for transmitting and one for receiving, or they may be used together as a stacked array for either transmitting or receiving. The B-band and C-band system antennas each consists of a pair of adjustable dipoles on a plane reflector. The D-band system employs two pairs of fixed dipoles on a plane reflector for each antenna. The antenna arrays may be rotated for either vertical or horizontal polarization. However, A-band antenna arrays on the same mast must have the same polarization, whereas B-, C-, or D-band antenna arrays on the same mast may have opposite polarization.

Page 214, paragraph 213*d*(1). Delete the second sentence and substitute: This voltage is adjustable from +300 to +900 volts and is normally adjusted to +800 volts for operation in the A-band, +850 volts for operation in the B-band, +750 volts for operation in the C-band, and +825 volts for operation in the D-band.

Page 217, paragraph 215*c*, line 2. Change "paraphrase" to: **paraphase.**

Page 224, paragraph 220. Make the following changes:

Delete the first sentence and substitute:

The driver uses a class C amplifier as a frequency doubler for operation in the B-, C-, or D-band, and as a straight amplifier for operation in the A-band.

Subparagraph *a*, line 7. Change "drive" to: **driver.**

Page 226, paragraph 220*d*. Make the following changes:

Delete the second sentence and substitute: The plate supply voltage normally is adjusted to +800 volts for operation in the A band, +850 volts for the B band, and +750 volts for the C band and D band.

Line 12. Delete the last two sentences and substitute:

When the A-band or C-band rf tuner is in place in the transmitter, switch S103 is closed and resistor R189 is connected between the screen grid and ground. As a result, the screen grid voltage is decreased and the operating levels of the 4X150A and 4X150G tubes (driver and tuner) are reduced. This reduced level of operation in the A- and C-bands is possible because, in the A-band, the exciter delivers more than 15 watts of drive (at its fundamental frequency) to the A-band rf tuner; this is sufficient to obtain the optimum power output from the power amplifier stage of the tuner. The second harmonic output of the exciter is approximately one-quarter of the fundamental, and the drive levels to the B-, C-, and D-band rf tuners is marginal. Unlike the B-band rf tuner, the C-band tuner has a multiplier (doubler) stage that also increases the drive to the power amplifier to a level that permits a lower screen voltage and more conservative operation. The D-band rf tuner has the same number of stages as the C-band rf tuner, but the multiplier stage is a tripler and the drive to the power amplifier stage is again marginal, especially at the higher frequency.

Figure 144. Delete note 3 and substitute:

3. SWITCH S103 IS OPERATED AUTOMATICALLY BY THE INSERTION OF THE RF TUNER. THE SWITCH IS OPEN FOR THE B-BAND AND D-BAND RF TUNERS AND CLOSED FOR THE A-BAND AND C-BAND RF TUNERS.

Add paragraph 220.1 after paragraph 220:

220.1. Transmitter A-Band Tuner

a. General. Radio Frequency Amplifier AM–1180/GRC is the transmitter A-band rf tuner, and it is used as a power amplifier in the frequency range from 50 to 100 megacycles. Figure 144.1 is a simplified schematic diagram of the A-band tuner; the complete schematic diagram is shown in figure 268.1.

b. Electrical Description.

(1) The output of the driver circuit in Radio Transmitter T–302/TRC is applied to the grid of tube V1 through input connector P1 and inductor L5, which matches the input impedance to the grid circuit impedance and reduces the effect of the grid-to-ground capacitance. INPUT LOADING capacitor C17, resistor R1, and inductor L6 form a loading circuit for the grid; the amount of resistive loading is determined by the setting of variable INPUT LOADING capacitor C17. Inductor L6 balances the stray capacitance of resistor R1. Tube V1 is biased for class C operation by the voltage drop across cathode resistor R6, and by the voltage drop caused by grid current flowing through inductors L5 and L3 and resistors R3 and R2 when the grid is driven positive by the incoming rf signal. The grid current is sampled by the transmitter TEST meter circuit; this voltage is applied through inductor L3, another impedance-matching device for the grid, to a voltage divider consisting of resistors R3 and R2. The voltage to ground at the junction of these resistors is applied to the transmitter TEST meter when the transmitter TEST switch is in the PWR AMPL GRID position. Capacitor C1 is an rf bypass capacitor for resistor R3, and capacitor C2 serves the same function for resistor R2.

(2) Cathode current flows through bias resistor R6 which is bypassed by capacitors C3, C4, C6, and C7. A voltage divider consisting of resistors R5 and R7 is connected across the cathode bias resistor. Resistor R7 is bypassed by capacitor C8, and the voltage across resistor R7 is applied to the TEST meter on the transmitter panel when the transmitter TEST switch is in the PWR AMPL CATH position.

(3) The screen grid of tube V1 is connected to the regulated screen-voltage output of the transmitter power supply through dropping resistor R8. The voltage delivered to the screen grid is adjusted by means of resistor R11, SCREEN VOLTS ADJ potentiometer R12, and resistor R13. The screen grid is bypassed by capacitor C16. Capacitors C9, C11, and C18 along with R11 serve as a decoupling network.

(4) The filament-supply lead of tube V1 is bypassed by capacitor C5. Resistor R4 reduces the supplied filament voltage to the proper value.

(5) The amplified voltage appearing at the plate of tube V1 is developed across a pi-section network consisting of PLATE TUNE inductor L1, TRACKING ADJ capacitor C13, OUTPUT COUPLING capacitor C14, and coupling capacitor C15. The circuit is tuned by inductor L1, and the frequency is made to track by means of capacitor C13. The degree of coupling to the antenna is adjusted by capacitor C14 and the output of the plate circuit is coupled to the antenna by capacitor C15. Inductor L4 is a protective device. If capacitor C15 becomes short-circuited, inductor L4 will ground the high-voltage plate supply and thus prevent the direct connection of +750 volts to the antenna. Inductor L2, resistors R9 and R10, and capacitors C12 and C10 form a decoupling network.

Page 229, paragraph 222*b*. Make the following changes:

Line 12. Change "amplified" to: **amplifier.**

Line 26. Change "F" to: **J.**

Page 232. Add paragraph 224.1 through 224.3 after paragraph 224:

224.1. Transmitter D-Band Tuner

a. General. Radio Frequency Amplifier-Multiplier AM–1178/GRC is the transmitter D-band tuner and operates over a range of output fre-

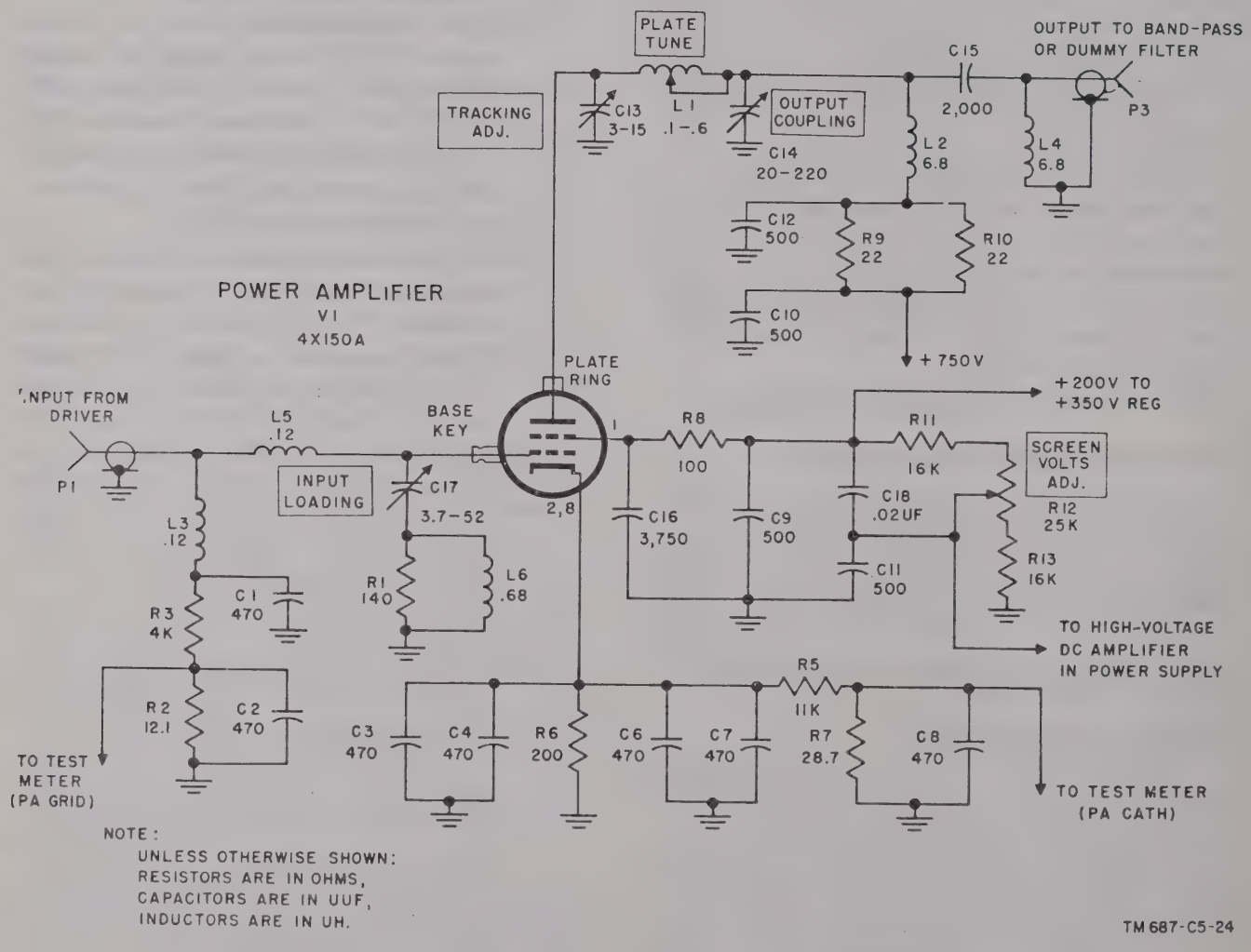

Figure 144.1. (Added) *Transmitter A-band tuner, simplified schematic diagram.*

quencies from 400 to 600 mc. This tuner consists of a multiplier (frequency tripler) and a power amplifier stage. Mechanical diagrams showing cutaway views of the multiplier and power amplifier are shown in figures 149.1 and 149.2, respectively; equivalent electrical diagrams are shown in figures 149.3 and 149.4; the complete schematic diagram of the tuner is shown in figure 270.1.

b. Mechanical Description. Two sets of concentric cylindrical cavities are included in the D-band tuner (fig. 227.2). One set is in the multiplier stage, and the other is in the power amplifier stage. Each has the output cavity folded back over the input cavity.

(1) The multiplier stage consists of three cylinders (fig. 149.1): an inner cylindrical rod A, a middle cylinder B covered by a sleeve C (to protect the three lead-out wires of cylinder B), and an outer cylinder D. Grid gravity Z2 is formed by rod A, shorting plunger E, and the inside of cylinder B. Plate cavity Z1 is formed by the outside of sleeve C, shorting plunger F, and the inside of cylinder D. Plunger E is moved by the rotation of threaded rod G which, in turn, is controlled by the front panel MULTIPLIER GRID knob. Plunger F is moved by the rotation of the two outer threaded rods, one of which is shown at H. These rods are geared to the front panel MULTIPLIER PLATE knob. Rod J, which is geared to the MULTIPLIER GRID knob, controls capacitor C29. Loop K is attached to plunger E and couples the input signal into cavity Z2. MULTIPLIER OUTPUT COUPLING capacitor C11 is formed by the capacitance existing between disk L and the knob-like projection on sleeve C. The spacing between the plates of C11 is varied by movement of the disk. Tube V1 is the 4X–150A multiplier.

(2) There are four cavities in the power amplifier stage (fig. 149.2). Grid cavity Z4 is formed by the straight portion of rod M and the inner surface of cylinder N. Input cavity Z5 is formed by the smaller branch of rod M and the inner surface of one of the cavities of grid structure O. Tuning cavity Z6 is formed by the larger branch of rod M within the other cavity of grid structure O and plunger S. Plate cavity Z3 is formed by the outer surface of middle cylinder P, plunger Q, and outer cylinder R. Grid tuning plunger S is moved by the rotation of the threaded rod connected to the POWER AMPLIFIER GRID knob. Plunger Q is moved by the rotation of the two outer threaded rods, one of which is shown at T. These rods are geared to the front panel POWER AMPLIFIER PLATE knob. AMPLIFIER OUTPUT COUPLING capacitor C25 is formed by the capacitance existing between disk U and the knob-like projection on cylinder P. The spacing between the plates of C25 is varied by movement of the disk. Tube V2 is the 4X150G power amplifier.

224.2. Transmitter D-Band Tuner Multiplier (fig. 149.3)

a. The output of the driver is inductively coupled to cavity Z2 by loop K (fig. 149.1), which is represented by inductor L2 (fig. 149.3). Cavity Z2, represented in the figure by inductor L3 and capacitor C29, is of such a length as to present inductive reactance at the input frequency. The cavity is tuned to resonance by the plunger, capacitor C29, and the input capacitance of tube V1. One end of the tuned circuit is held at cathode rf reference potential by cathode bypass capacitors C5 and C6. The other end of the tuned circuit is connected through capacitor C7 to the grid. When the grid is driven positive, grid current flows and charges capacitor C7. When the rf grid voltage decreases, capacitor C7 discharges slightly through a length of wire, which is represented as inductor L4, and through resistors R7, R21, and R10, which are bypassed by capacitors C10 and C15. Inductor L4 serves as an rf choke which prevents capacitor C10 from placing the grid at rf ground potential. The voltage across resistor R10 is proportional to the grid drive and is applied to the transmitter TEST meter when the transmitter TEST switch is in the MULT CATH position.

b. Rf plate current flows through blocking capacitor C12 to cavity Z1, represented in figure 149.3 by inductor L5 and capacitor C30. Cavity Z1 is of such length as to act as a parallel-tuned circuit that is resonant at three times the input frequency. Therefore, the multiplier operates as a frequency tripler. The plate end of cavity Z1 is grounded for rf; the other end is connected through capacitors C8 and C9 to the cathode rf reference potential and through MULTIPLIER OUTPUT COUPLING capacitor C11 and connectors J1 and P3 to the power amplifier of the tuner. Capacitors C8 and C9 isolate the dc cathode circuit from cavity Z1. Capacitor C11 provides impedance matching and couples the output of Z1 to the 50-ohm coaxial cable. The dc plate circuit is isolated from the rf circuit by a length of wire which is represented as inductor L6. Resistor R12 provides additional isolation between the rf and dc plate circuits.

c. The screen grid is held at the cathode rf potential by capacitor 4. The dc screen-grid circuit is isolated from the rf circuit by the distributed inductance of the screen-lead wire, designated L7 in the figure. Capacitors C1 and C28 and the parallel combination of resistors R4 and R5 provide decoupling for the regulated high-voltage output of the power supply.

d. Cathode bias is developed across resistor R19. Capacitors C2 and C26, inductor L1, and the lead inductance (L8) form a two-section L-type filter to isolate the dc cathode circuit from the rf circuits which are connected to the cathode. The voltage divider, which consists of resistors R18 and R20, is connected across the cathode bias resistor. The voltage across resistor R20 is proportional to the total dc tube current and is applied to the transmitter TEST meter when the transmitter TEST switch is in the MULT CATH position.

224.3. Transmitter B-Band Tuner Power Amplifier

(fig. 149.4)

a. Rf Circuits. The output of the multiplier is coupled from connector P6 to cavity Z5 at a point within the cavity to provide an impedance match for the connecting coaxial cable. The input circuit consists physically of three coaxial lines (cavities) of a different characteristic impedance, represented in figure 149.4 as L9, L12, and the combination of L16 and stray capacitance C32. Coaxial line Z5 is short-circuited at one end, and the input power is fed through J3 into a tap on this line. Line Z6, consisting of inductance L12 in series with GRID capacitor C19, tunes the input to the operating frequency. These two lines are joined in parallel to the cathode-grid structure of type 4X150G tube V2 by means of Z4 (L16 and C32). This circuit may be looked upon as a three-quarter wave line in which variable capacitance loading (C19) has been added so as to reduce the physical length of the line. One end of line Z5 is at rf reference potential and is connected through bypass capacitors C16 and C23 to the control grid, and through capacitor C14 to the screen grid. Thus, the control and screen grids are held at the rf reference voltage, and the circuit functions as a grid separation amplifier. The other end of input line Z5 is connected through line Z4 to the cathode, and causes the cathode voltage to vary at an rf rate with respect to the grid. When the grid is driven positive, grid current flows and charges capacitor C16. When the rf grid voltage decreases, capacitor C16 discharges slightly through a length of wire, represented as L10, and through resistors R15, R16, and R17. The rf plate current is coupled to plate cavity Z3 through blocking capacitor C13. Cavity Z3 (inductance L11 and capacitor C31) is tuned to the same frequency as the input circuit by means of the POWER AMPLIFIER PLATE control, which adjusts the position of the shorting plunger, and hence, the physical length of the cavity. The cavity is tuned when its length corresponds to one-quarter wave length at the operating frequency. The plate end of the cavity is grounded and the other end is at the rf reference voltage. The reference voltage with respect to ground is the voltage across cavity Z3 and is connected to the output through AMPLIFIER OUTPUT COUPLING capacitor C25 and connectors J2, P4, and P5.

b. Dc Circuits.

(1) The dc cathode circuit path is formed by L16, L9, and L10 (fig. 149.4). The rf energy is contained on the top side of L10 (the lead inductance) and is thus isolated from the dc circuit. Cathode bias is developed across resistor R15 which is bypassed by capacitor

C22. Capacitor C16 prevents the dc cathode voltage from being shorted to ground through cavity Z3. A voltage divider, consisting of resistors R16 and R17, is connected across the cathode bias resistor. The voltage across resistor R17 is proportional to the total tube current and is applied to the transmitter TEST meter when the transmitter TEST switch is in the PWR AMPL CATH position.

(2) When the cathode becomes more negative than the control grid, grid current flows in pulses which are smoothed out by capacitor C23. The average dc grid current flows through a length of wire, represented by rf choke L14, and through resistors R13, R22, and R14, which are bypassed for rf by capacitors C20 and C21. The voltage across R14 is roughly proportional to the amount of drive to the cathode and is applied to the transmitter TEST meter when the TEST switch is in the PWR AMPL GRID position. Crystal CR1, connected across resistors R22 and R14, prevents positive grid current from flowing through the meter circuit.

(3) The dc screen-grid circuit is isolated from the rf circuit by the inductance of a length of shielded wire (L13). Capacitor C18 provides additional coupling for the regulated high-voltage output of the power supply.

(4) Inductance L15, a length of shielded wire, isolates the dc from the rf plate circuit. Resistor R12 provides additional decoupling for the +750-volt output of the power supply.

Page 232. Delete paragraph 225 and substitute:

225. Band-Pass Filter

a. General. A brief description of the band-pass filters is contained in paragraph 195. In the A band, each filter can be tuned over an approximate range of 8½ mc; each B-band filter can be tuned over a range of 21 mc; each C-band filter covers 30 mc; and in the D band, each filter tunes over a 50-mc range. Each filter inserts a loss of about 1 db at the operating frequency. The A-band filters cause a loss of about 40 db at all frequencies more than 12 mc from the operating frequency. A loss of about 45 db occurs at all frequencies more than 21 mc away from the operating frequency in the B band, and more than 30 mc away in the C band, when each of these filters is used. The D-band filters cause a loss of about 35 db at all frequencies more than 30 mc from the operating frequency.

b. Mechanical Description. Simplified cross sections of the band-pass filters are shown in A, figures 149.5 and 150. The two cavities of each band-pass filter are identical. The input cavity consists of an outer cylinder, E, with two end plates, F and G. Located on end plate F is input coaxial connector P1 to which coupling loop A is connected. Rod B, which lies along the axis of outer cylinder E, supports fixed inner cylinder C. In A, figure 150, C is shown as a single cylinder for the B-, C-, and D-bands. In A, figure 149.5, C is shown as two single cylinders for the three filters covering the high end of the A-band, and as two sets of concentric cylinders in the three low-end A-band filters. Rotation of knob I, which is coupled to the shaft through a gearing arrangement, causes inner cylinder D to move along the axis within cylinder C. In the high-end A-band filters, there is nothing within the second cylinder C; in the low-end filters, a set of concentric cylinders, S, fits within second cylinder C. In the figures, the gearing arrangement at the front has been simplified and is represented by screw H. A second coupling loop J is connected to coupling loop K, which is in output cavity O and corresponds to input coupling loop A.

c. Equivalent Electrical Diagram (B, fig. 149.5 and 150). At the vhf or uhf range for which the band-pass filter is used, rods B and L present inductance. These inductances are represented on the equivalent electrical diagrams as inductors L2 and L5, respectively, and are also represented by dotted lines in figures 270.2 and 271. The fixed capacitance of each cavity consists of the distributed capacitance between the center rod and the outer cylinder, and the capacitance between the fixed inner cylinder C or M and outer cylinder E or O. The sum of these distributed capacitances is represented by capacitor C1 for the input cavity and capacitor

C4 for the output cavity. The fixed inner cylinders are represented as the connection dots appearing above capacitors C1 and C4. In the input cavity, capacitance exists between adjustable inner cylinder D and fixed inner cylinder C. This capacitance appears on the equivalent diagrams as capacitor C2. In the three low-end A-band filters, additional capacitance exists between the concentric sets of cylinders C and S. This is represented in figures 149.5 and 270.2 by capacitor C5. The adjustable inner cylinders and the outer cylinders of both cavities are at ground potential and are represented by the common ground line. In the output cavity, capacitors C3 and C6 correspond to capacitors C2 and C5, respectively. Coupling loops A, J, K, and R are shown as inductors L1, L3, L4, and L6, respectively.

d. Theory of Operation. Because the theory of operation of the input cavity is identical with the output cavity, only the input cavity will be discussed.

(1) Clockwise rotation of front-panel control I causes the adjustable cylinder to move into the fixed inner cylinder. Thus capacitor C2 increases and therefore increases the total capacitance of the input cavity. As a result, the frequency to which the circuit is tuned de-

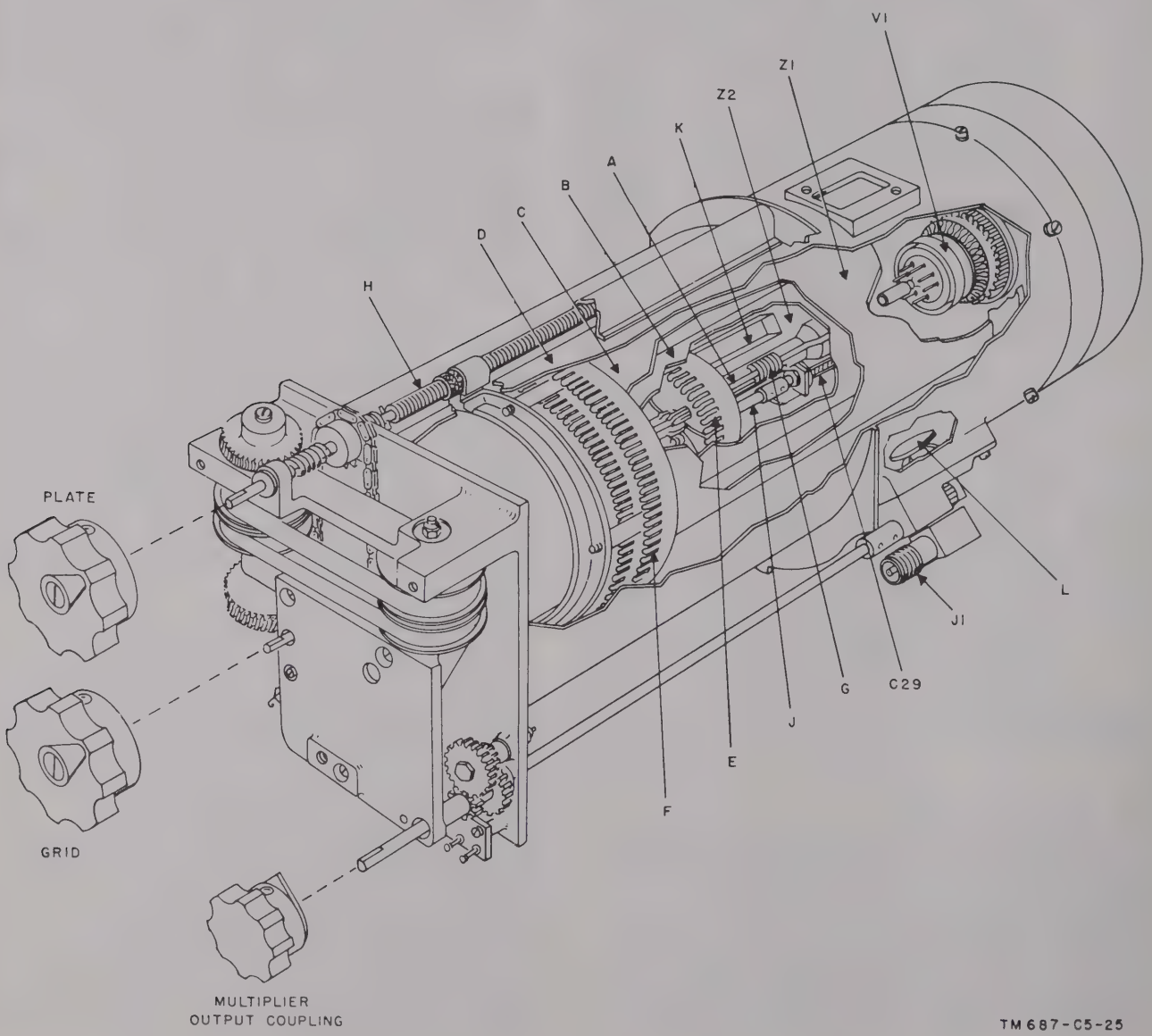

Figure 149.1. (Added) *Transmitter D-band rf tuner multiplier, cutaway view.*

creases, and is indicated on the dial connected to knob I.

(2) The input signal is applied to connector P1 and is inductively coupled into the input cavity through coupling loop L1. The physical positioning of loop L1 produces a good impedance match between the coaxial cable that is connected to P1 and the cavity. The signal from the input cavity is coupled to the output cavity by loops L3 and L4. Typical selectivity curves for the band-pass filters are shown in figure 53.

e. Differences in Band-Pass Filters. Each of the band-pass filters covers a different portion of the frequency range. The spacing between end plate F and the front panel is necessarily the same for all the filters because each must be fitted into the same space in the transmitter or receiver. The spacing between end plates F and G is smaller in the higher frequency filters, and the inductance of rods B and L is also smaller. The result is higher resonant frequencies. Additional inner cylinders are used in the lower frequency filters to obtain the greater capacitance required to resonate at those frequencies.

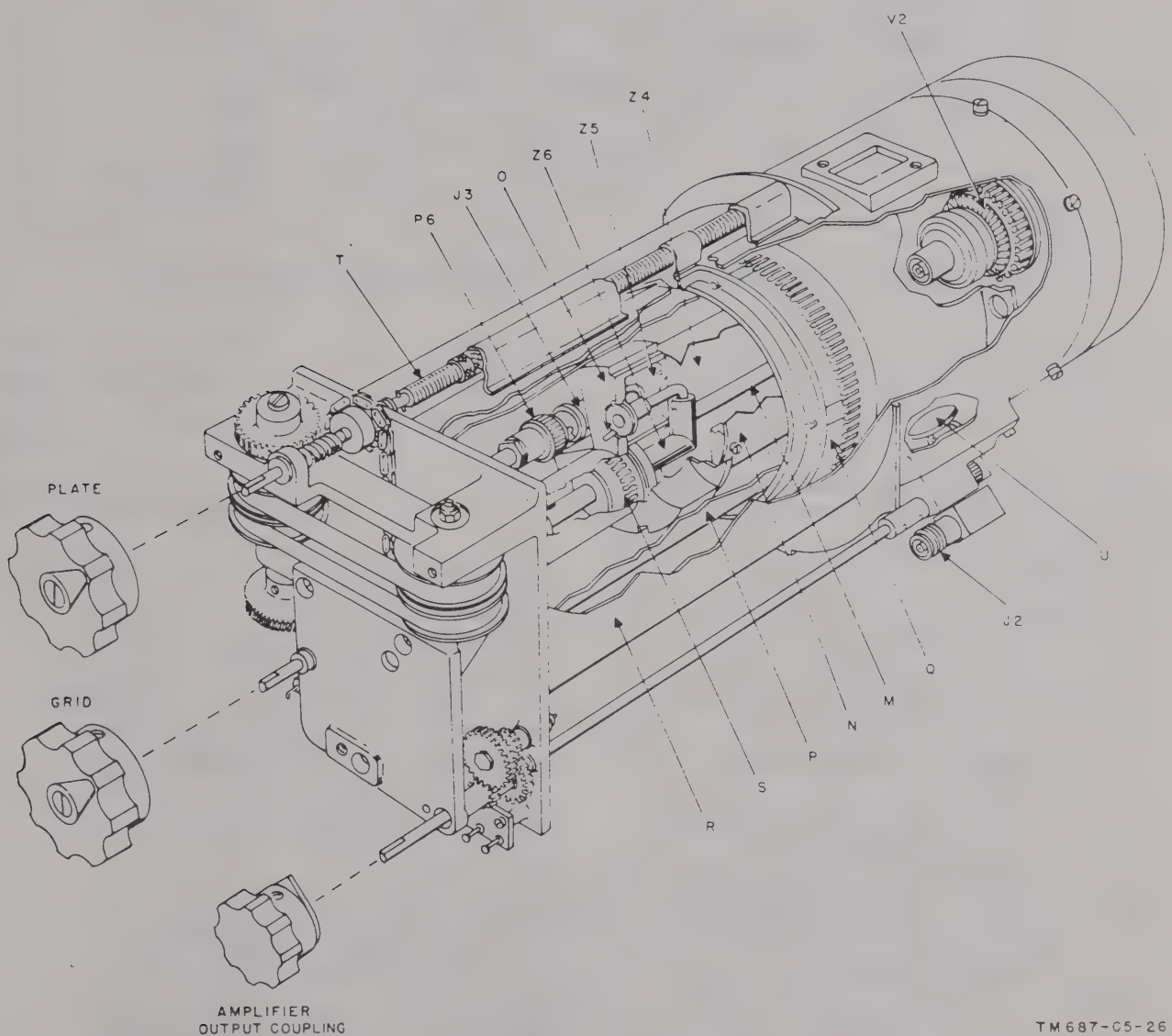

Figure 149.2. (Added) *Transmitter D-band rf tuner power amplifier, cutaway view.*

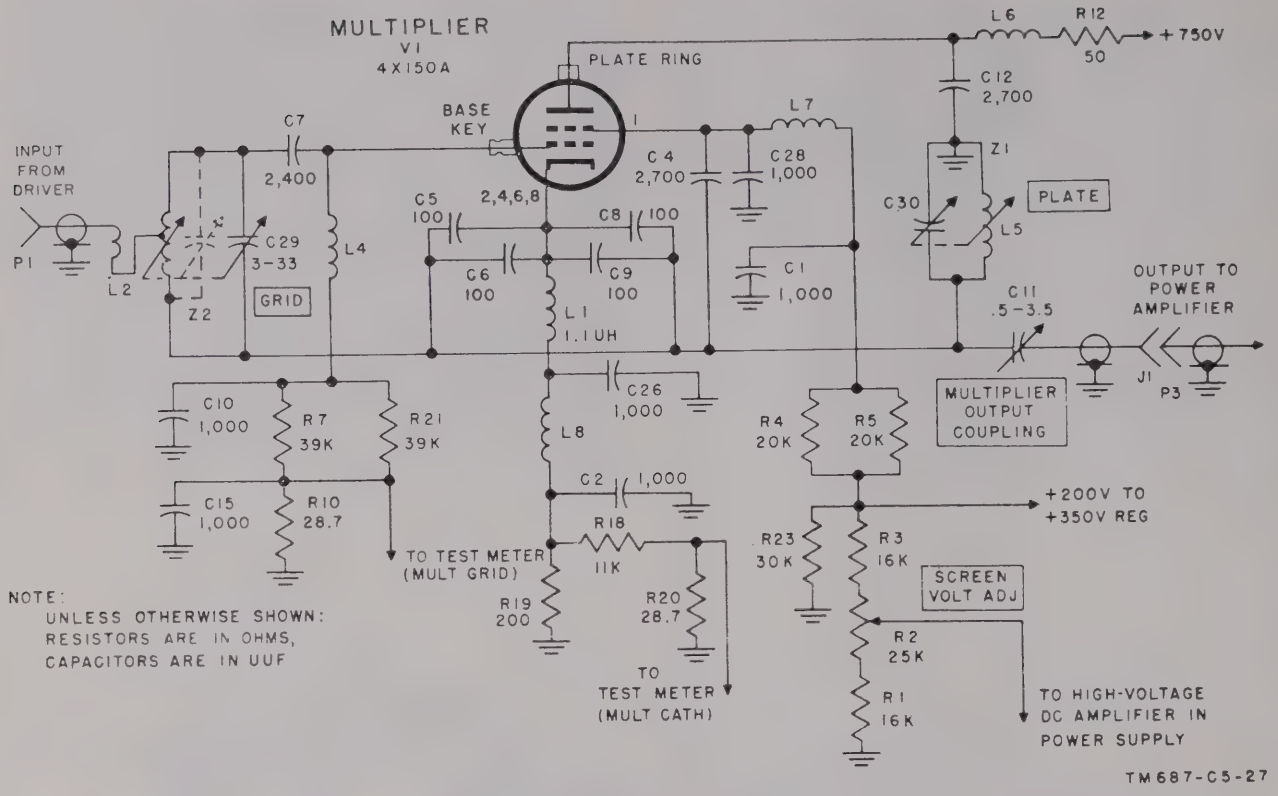

Figure 149.3. (Added) *Transmitter D-band rf tuner multiplier, equivalent electrical diagram.*

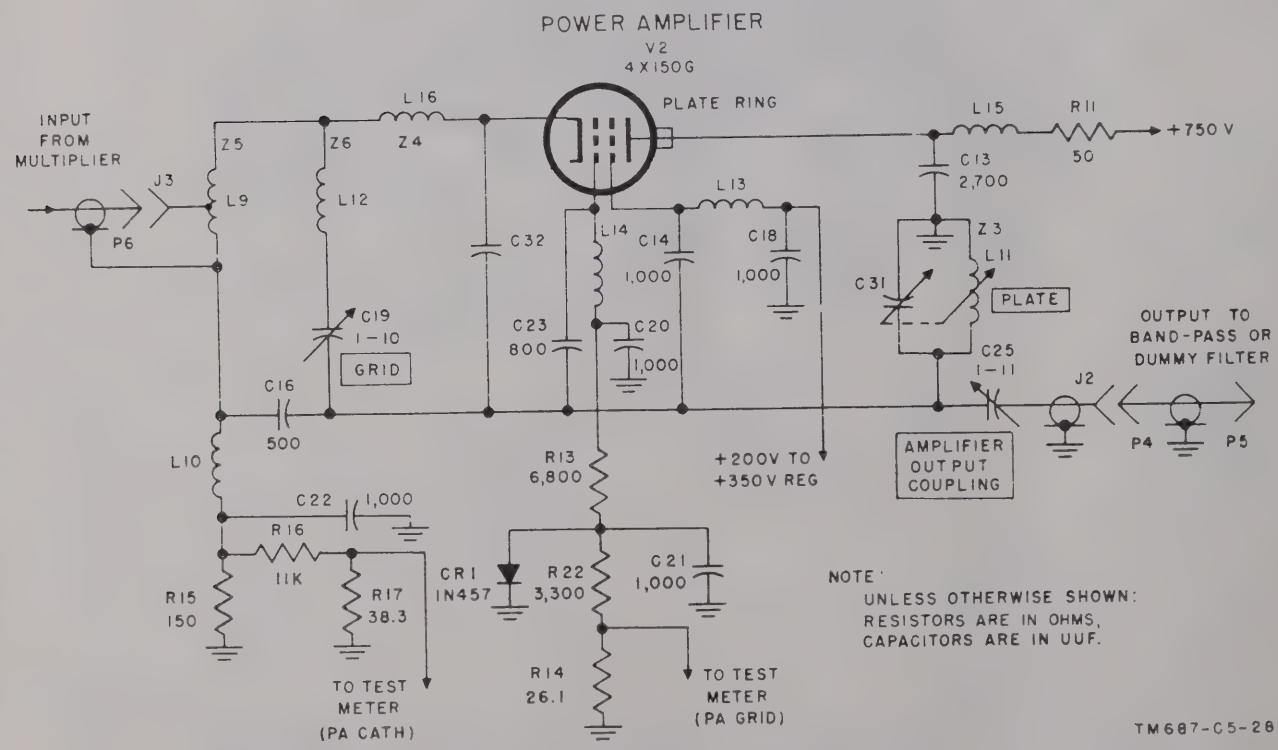

Figure 149.4. (Added) *Transmitter D-band rf tuner power amplifier, equivalent electrical diagram.*

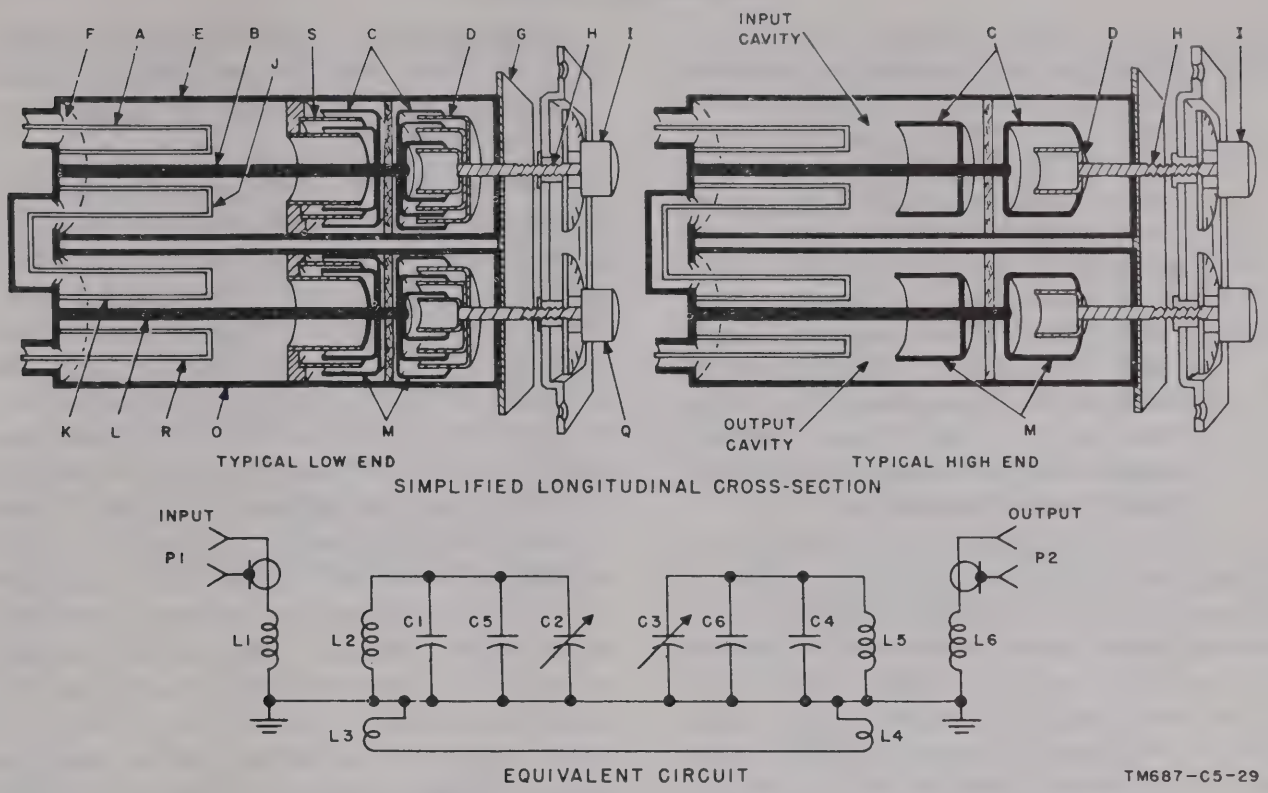

Figure 149.5. (Added) *Band-pass filters, mechanical and electrical diagram, A-band.*

Page 234, figure 150. Add "B-, C-, and D-bands" to the caption.

Page 237. Delete paragraph 227 and substitute:

227. Transmitting Antenna

a. A-Band.

(1) Two Yagi antenna arrays, each consisting of a dipole director, a dipole radiator, and a dipole reflector, are provided with the A-band antenna system. These antenna arrays are mounted on a single mast; they may be used separately, one for transmitting and one for receiving, or together, when maximum range is necessary, as a stacked array. The lengths of the elements on each array, the spacing between the elements, and the spacing between arrays are adjustable to permit tuning the antenna through the A-band frequency range. Coaxial-cable transmission line is used to connect the antennas to the receiver and transmitter. A special matching transformer is provided at the center of each dipole radiator to match the unbalanced coaxial cable to the balanced dipoles.

(2) The antenna matching transformer is basically a broad-band coupled network whose primary purpose is to feed the balanced Yagi antenna radiator from the unbalanced coaxial transmission line. The transformer also provides mechanical support for the dipole radiator elements. The equivalent electrical diagram of the antenna matching transformer is shown in figure 152.1. The input circuit consists of primary inductance L1, a 1-turn coil wound on a teflon form in series with fixed capacitor C1. These components, in combination with stray capacitance C4, form a resonant circuit at the lower end of the band. The output circuit consists of L2, a symmetrical 2-turn coil surrounding the primary winding, with the center tap grounded to provide a balanced output. The

series capacitor in each output lead also serves to resonate the secondary inductance and stray capacitance at the bottom of the band. An electrostatic shield is placed between the two windings to reduce the capacitive coupling and to insure a balanced output. The magnetic coupling between the windings is determined by the spacing between them. The matching transformer reflects a 50-ohm unbalanced load on the transmission line when terminated by the 50-ohm balanced antenna with a voltage standing-wave ratio (vswr) of 2.5 to 1.

b. B-, C-, and D-Bands. The transmitting antenna, like the receiving antenna, consists of dipoles mounted on a plane reflector. Two V-type dipoles are used in the B-band, two conventional rod-type dipoles are used in the C-band, and four rod-type dipoles are used in the D-band. In the B- and C-bands, the lengths of the dipoles, the spacing between dipole and reflector, and the spacing between adjacent dipoles are adjustable to provide for the best possible directivity over the operating range. All dimensions are fixed in the D-band. Typical directivity patterns are shown in figure 154.

Page 263, paragraph 245. Make the following changes:

Subparagraph *e*. Delete the first sentence and substitute:

The dc return path for the grid of multiplier V1 is through grid-leak resistor R7 (paralleled by R21 in the D-band rf tuner) and metering resistor R10 (figs. 148 and 149.3).

Subparagraph *f*, heading. Change "(fig. 148)" to: **(figs. 148 and 149.3).**

Subparagraph *g*. Delete subparagraph *g* and substitute:

g. Position 6, PWR AMPL GRID. Resistors R2 and R3 provide the dc return path for the power amplifier grid circuit of the A-band rf tuner (fig. 144.1). The potential developed across resistor R2 is used for grid-current metering. In the B-band tuner (fig. 146), the dc voltage developed across resistor R9 is used for metering the grid current of the power amplifier. The dc return path for the grid circuit is provided by resistors R13 and R14 in the C-band rf tuner (fig. 149) and by resistors R13, R22, and R14 in the D-band rf tuner (fig. 149.4). In the C- and D-bands, the potential developed across resistor R14 is used for grid-current metering. This meter indication may be used for tuning the multiplier plate circuit of the C- or D-band tuner and the power-amplifier grid circuit of any one of the four rf tuners. Full-scale deflection of the meter corresponds to a grid current of 15 ma. A 30-ua reading is normal for this circuit; that is, about 9 ma of grid current.

Subparagraph *h*, heading. Change "(figs. 146, 149, and 170)" to: **(figs. 144.1, 146, 149, 149.3, and 170).**

First sentence. Delete the first sentence and substitute: Resistors R16 and R17 in the C-band and D-band rf tuners and resistors R5 and R7 in the A-band and B-band rf tuners provide for metering the cathode current of their respective power amplifier stages.

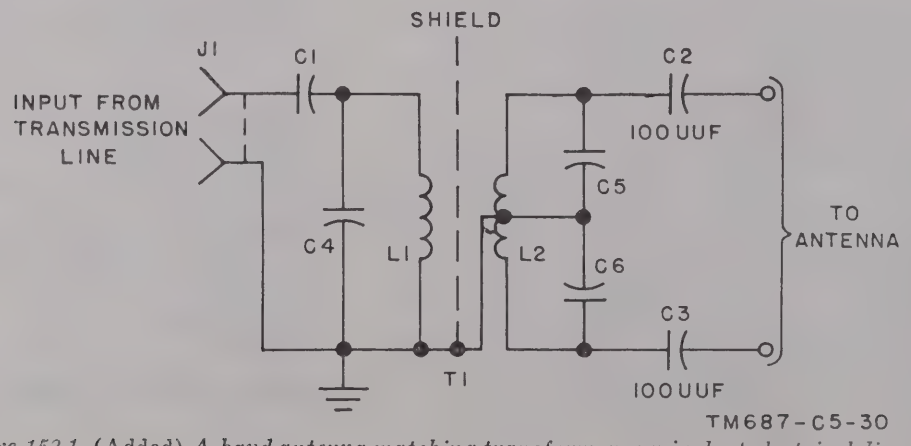

Figure 152.1. (Added) *A-band antenna matching transformer, equivalent electrical diagram.*

Page 264, figure 170. Make the following changes:

Change "NOTE" to: **NOTES.**

Designate the existing note, 1.

Add the following:

2. EACH RF TUNER IS REPLACEABLE BY ANY OF THE OTHER THREE FOR OPERATION IN THE CORRESPONDING BAND.

Replace the block showing the rf tuners with the diagram below.

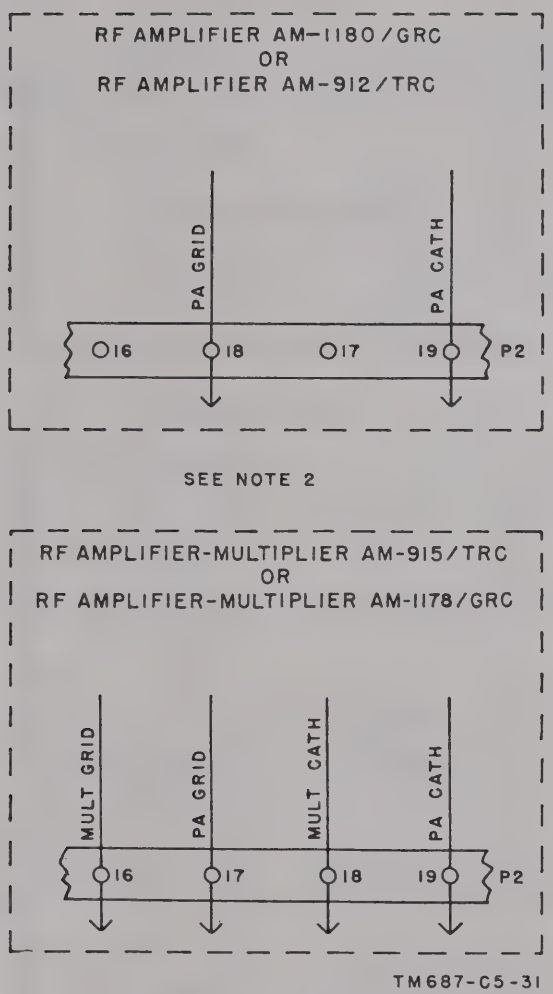

Figure B. Change to figure 170.

Page 268, paragraph 251*c*(1). Make the following changes:

Line 15. After "potentiometer R2," add: (B-, C-, and D-bands), or fixed resistors R11 and R13 and SCREEN VOLTS ADJ potentiometer R12 (A-band).

Line 16. Change "of potentiometer R2" to: **of the potentiometer.**

Last line. Delete the last line.

Page 269, figure 171. In the small block on the right hand side of the drawing, change "IN B-BAND OR C-BAND TRANSMITTER TUNER" to: **IN TRANSMITTER RF TUNER.**

Page 271, figure 172. Make the following changes:

In the block on the right hand side of the drawing, change "IN B-BAND OR C-BAND TRANSMITTER TUNER" to: **IN B-BAND, C-BAND, OR D-BAND TRANSMITTER TUNER.**

Add the block shown below to the right hand side of the figure.

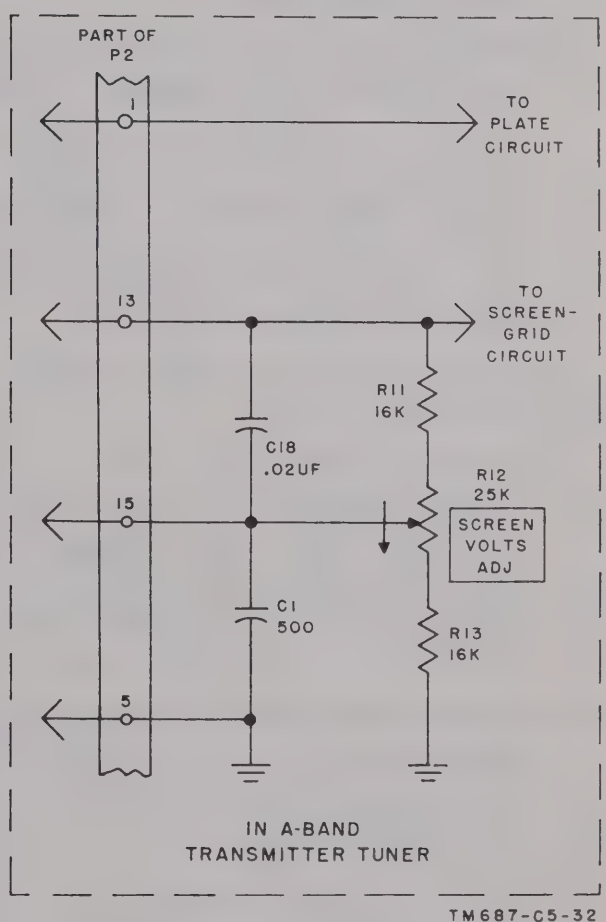

Figure C. Change to figure 172.

Page 274, paragraph 255. Make the following changes:

Subparagraph *a*. Delete the first sentence and substitute: The receiver circuits described in this section are a functional grouping that consists of the following components: all of Radio Receiver R–417/TRC, except the order-wire and signaling circuits (pars. 300–308); Amplifier-Converter AM–1179/GRC, Amplifier-Converter AM–913/TRC, Amplifier-Converter AM–914/TRC, or Amplifier-Converter AM–1177/GRC; the dummy filter or one of the band-pass filters; and Antenna AS–756/GRC, Antenna AS–639/TRC, Antenna AS–640/TRC, or Antenna AS–755/GRC.

Subparagraph *b*. Delete the second sentence and substitute: The receiver is continuously tunable over the frequency range from 50 to 100 mc when equipped with the A-band rf tuner, from 100 to 225 mc with the B-band tuner, from 225 to 400 mc with the C-band tuner, and from 400 to 600 mc with the D-band tuner.

Figure 174. (Contained in separate envelope.) Make the following changes:

Delete note 3 and substitute:

3. THE D-BAND RF TUNER IS REPLACEABLE BY THE A-BAND, B-BAND, OR C-BAND RF TUNER FOR OPERATION IN THE CORRESPONDING BAND.

Replace the two blocks at the left side of the drawing labeled "C-BAND R-F TUNER" and "B-BAND R-F TUNER" with the blocks shown below.

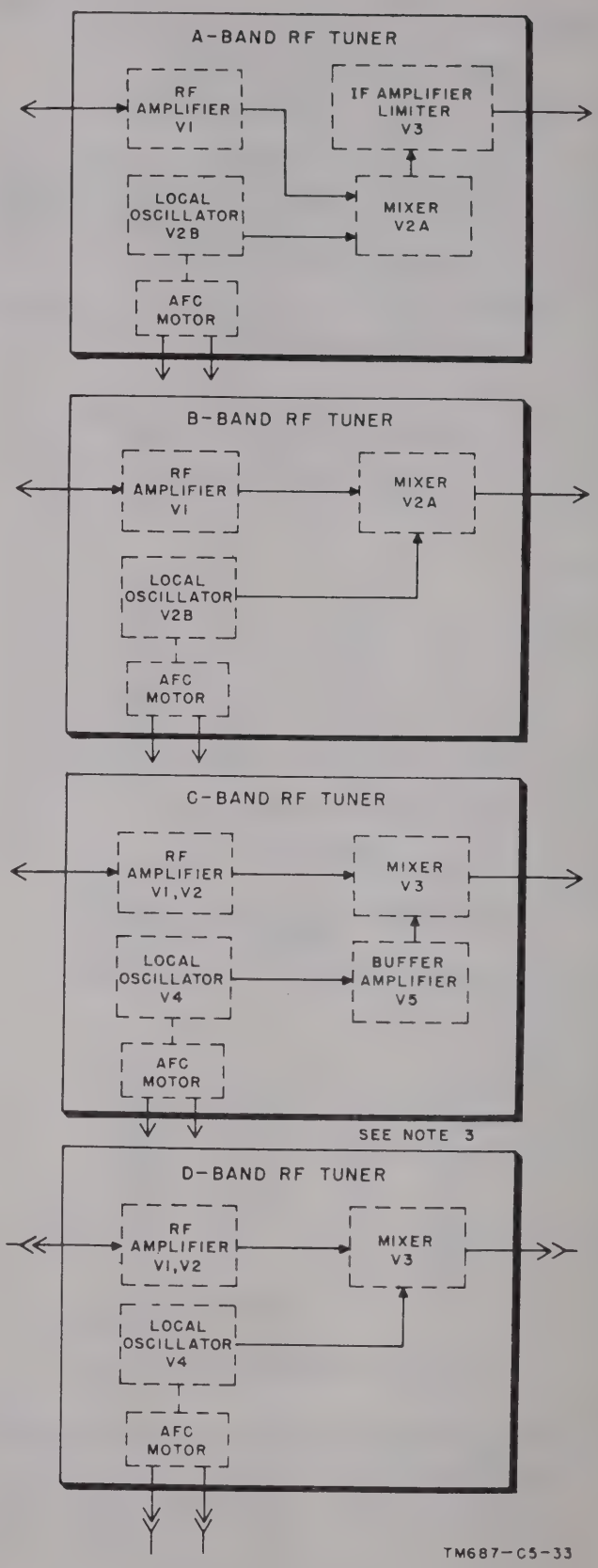

Figura D. Change to figure 174.

Paragraph 256, line 3. Change "twelve" to: 22.

Add paragraph 256.1 after paragraph 256:

256.1. A-Band Receiver Tuner

a. General. Amplifier-Converter AM–1179/TRC is the receiver A-band tuner. It operates in the 50- to 100-mc frequency range and consists of a single rf amplifier stage, a local oscillator, a mixer, and an if preamplifier stage (fig. 174). Tuning of the first three stages is accomplished by the front-panel RF AMP tuning control.

b. Rf Amplifier Stage. The rf signal from the band-pass filter is coupled through the cathode of rf amplifier stage V1. This stage operates as a grounded grid amplifier. Some of the functions of the rf amplifier section are to improve sensitivity, to reduce image response, to improve the signal-to-noise ratio, and to limit oscillator radiation by isolating the local oscillator from the antenna circuit. The amplified output of the rf stage is applied to the tuned input circuit of mixer tube V2A.

c. Local Oscillator. Oscillator tube V2B produces the local-oscillator signal required for the heterodyne action of the receiver. The oscillator is tuned to operate 30 mc above the incoming rf signals, and its frequency is maintained constant by an afc system. The output of the local oscillator is fed to the input circuit of the mixer.

d. Mixer. The output of the rf amplifier heterodynes or beats with the output of the local oscillator in mixer tube V2A. The combination of the two frequencies produces a different frequency in the mixer output, which is the intermediate frequency of the receiver. This difference frequency is applied to the if preamplifier stage.

e. Preamplifier. The output of the mixer is applied to if preamplifier stage V3. The main function of this stage is to decrease the overall bandwidth of the receiver. The if signal output is applied to the if amplifier of the receiver.

Page 275. Add paragraph 258.1 after paragraph 258:

258.1. D-Band Receiver Tuner

a. General. Amplifier-Converter AM–1177/GRC is the receiver D-band tuner. It operates in the 400- to 600-mc frequency range. It consists of two stages of cascade rf amplification, a local oscillator, and a mixer output stage (fig. 174).

b. Rf Amplifier Stages. The rf signal from the band-pass filter is fed to first rf amplifier V1, where it is amplified and fed to second rf amplifier V2. These two coaxial-cavity rf stages operate as grounded grid amplifiers and are tuned by means of the front-panel RF AMP control. The FINE TUNE control, also located on the front panel, provides additional tuning of the second rf stage to make it track with the first stage.

c. Local Oscillator. Oscillator tube V4 produces the local-oscillator signal required for the heterodyne action of the receiver. The tuning of the oscillator to its operating frequency 30 mc below the incoming rf signals is performed by the front-panel OSC control. The frequency of the oscillator is maintained constant by an afc system. The output of the local oscillator is fed to the input of the mixer.

d. Mixer. The mixing of the outputs of both the second rf amplifier and the local oscillator takes place in the input circuit of mixer tube V3. The 30-mc difference frequency produced is fed to the if amplifier section of the receiver.

Page 277, paragraph 270*b*. Delete the second and third sentences and substitute: Each A-band (50–100 mc) antenna consists of a three-element Yagi array; the B-, C-, and D-band antennas consist of dipoles mounted on a plane reflector. Two V-type dipoles are used for the 100- to 225-mc B-band range; conventional rod-type dipoles are used for the others, two for the 225- to 400-mc C-band range and four for the 400- to 600-mc D-band range.

Paragraph 271*a*. Delete subparagraph *a* and substitute:

a. Plug-in tunable rf filters are used in each band to provide the required selectivity, six each in the A-, B- and C-bands, and four in the D band. The frequency range covered by each filter is approximately 8½ mc in the A-band, 21 mc in the B-band, 30 mc in the C-band, and 50 mc in the D-band. Each filter inserts a loss of about 1 db at the operating frequency. The A-band filters cause a loss of about 40 db at all

frequencies more than 12 mc from the operating frequency; the B-band and C-band filters cause a loss of about 45 db at all frequencies more than 21 mc and 30 mc, respectively, from the operating frequency; and the D-band filters cause a loss of about 35 db at all frequencies more than 30 mc from the operating frequency. The filter consists of two independently tunable, inductively coupled circuits. Each circuit is a one-quarter wave length coaxial line, the open end being capacitance loaded. Refer to paragraph 225 for the theory discussion of these filters.

Add paragraphs 271.1 through 271.4 after paragraph 271:

271.1. Rf Amplifier, Receiver A-Band Tuner (fig. 277.1)

a. Rf amplifier tube V1 operates as a grounded-grid triode. The incoming rf signal from the band-pass filter is fed through 50-ohm coaxial cable W103 and through inductor L3 and capacitor C2, which comprise a 30-mc trap, to the input tuned circuit. The input tuned circuit consists of variable inductor L1A and capacitor C1 in series with the cathode-to-grid capacitance of tube V1. The rf signal developed across the tuned input circuit is applied to the cathode of the grounded grid amplifier; the amplified rf signals appear in the tuned plate circuit. This tuned circuit consists of variable inductor L1B, capacitor C6, and trimmer capacitor C7. Capacitor C6 serves a dual function as a loading and temperature-compensating capacitor. Capacitor C7 is used to obtain proper circuit tracking with the dial calibrations. Resistor R4 and inductor L19 form a parasitic suppressor network.

b. Rf choke L2 keeps the cathode at rf potentials above ground, and provides dc connection. Resistor R1 is the cathode bias resistor, which is bypassed by capacitor C5. Inductor L5 and capacitor C12 form a decoupling network in the filament-supply lead. Resistor R2 and capacitor C13 form a decoupling network in the plate-supply lead. Resistors R14 and R18 load the 150-volt plate and 6.3-volt heater supplies, respectively. Inductor L16 and capacitor C37 filter the dc plate supply; the ac heater supply is filtered by inductor L17 and capacitor C38.

271.2. Local Oscillator, Receiver A-Band Tuner (fig. 277.1)

Local-oscillator tube V2B utilizes a series-fed Colpitts oscillator with the cathode grounded. The tuned circuit consists of variable inductors L1D, L14, L15, capacitors C31, C32, C34, C35, C36, and the tube interelectrode capacitances. Variable inductors L14 and L15 and trimmer capacitor C34 are adjusted so that the local oscillator and rf tuned circuits will track properly at all settings of the tuning dial. Capacitor C34 sets the total capacitance in the oscillating circuit; inductor L15 is a variable shunt trimmer which controls the oscillating frequency principally at the lower end of the A-band range; inductor L14 is a variable series trimmer inductor which affects the oscillating frequency mainly at the higher end of the range. Capacitor C31 is the grid leak capacitor. Capacitors C35 and C32 form the oscillator feedback divider. The afc trimmer capacitor C36 is driven by the afc servo-drive motor B1 to correct the oscillator frequency in accordance with the afc error information. Resistor R15 is the grid leak. Resistor R16, bypassed by capacitor C33, provides a grid-current metering point. Inductor L18 and capacitor C39 filter the meter current. Resistor R14 decouples the plate-supply lead, which is filtered by choke coil L8 and capacitor C19. The oscillator output from the plate is applied to the mixer stage.

271.3. Mixer, Receiver A-Band Tuner (fig. 277.1)

a. Signals from the rf amplifier and the local oscillator are coupled to the grid of mixer V2A. The rf signals are coupled through a capacitive T-network consisting of capacitors C8, C4, and C9. The output of the local oscillator is coupled through C15. The tuned input circuit of the mixer consists of variable inductor L10, capacitors C10 and C11, and the tube interelectrode capacitance. The coupling between the tuned output circuit of the rf amplifier and the tuned input circuit of the mixer is approximately critical over the A-band range. Capacitor C11 is adjusted for proper circuit tracking. The mixer plate circuit is tuned to the 30-mc difference frequency, the receiver intermediate frequency. The plate-tuned circuit consists of variable inductor L6, capacitors C16 and C18, and the

capacitances of the tube and the coupling circuit from the mixer to the succeeding stage.

b. The mixer plate is operated with the full +150-volt output of the power supply, without dropping (decoupling) resistors. Bias is obtained through resistors R5 and R6 in series, with R6 bypassed by capacitor C14. This circuit arrangement tends to reduce to a minimum all signals produced by the mixer except the sum and the difference of the input signals. The if, or difference frequency, output of the mixer is applied to the if preamplifier stage. Inductor L7 and capacitor C18 form a decoupling network in the plate-supply lead. Inductor L13 and capacitor C30 decouple the filament-supply lead.

271.4. If Amplifier Limiter, Receiver A-Band Tuner
(fig. 277.1)

The if amplifier-limiter stage reduces the bandwidth of the receiver to approximately 185 kc between half-power points (3 db down) and 425 kc between one-thousandth power points (20 db down); this is less than half the bandwidths of the receiver with the B-, C-, or D-band tuners. The overall circuit includes four tuned networks and tube V3, which offsets the loss incurred in producing the required bandwidth. Each of the four tuned networks has an effective Q of approximately 90. The first of these tuned networks consists of plate load L6 and capacitors C16 and C18, in the mixer output circuit; the circuit is loaded to obtain the required Q by resistor R19. This network is coupled to a similar network at the grid of tube V3, consisting of inductor L9 and capacitor C22, with resistor R7 serving the dual function of loading resistor for the tuned circuit and grid leak for the tube. The coupling between the first two tuned circuits is achieved by a capacitive T-network made up of capacitor C17 and C20 as the series arms, with the distributed capacitance of a short length of coaxial cable forming the shunt arm. The signal from the second tuned network is coupled to the grid of tube V3 through capacitor C21. The third tuned network is formed by inductor L11 and capacitor C26 in the plate circuit of tube V3. The required Q of this network is obtained by the loading action of resistor R8. Resistor R3 is a parasitic suppressor for V3. This tuned circuit is inductively coupled to the fourth tuned circuit, which consists of inductor L12 and capacitor C28. The required Q of this fourth tuned network is obtained by coupling the tuned circuit output through capacitor C29 to a resistive pi-network consisting of resistors R11, R12, and R13. This network, a 6-db 72-ohm pad, also serves to isolate the output of the A-band receiver tuner from the main if amplifier in the receiver. Resistor R10 and capacitors C25 and C27 form a decoupling network in the plate-supply lead; resistor R9 and capacitor C23 form a decoupling network in the screen-supply lead. The filament-supply lead is decoupled by a network consisting of rf choke L10 and capacitor C24.

Page 278, paragraph 274*a*, line 13. After "intermediate," add: frequency.

Page 280. Add paragraphs 279.1 through 279.3 and figures 174.1 and 174.2 after paragraph 279:

279.1. First and Second Rf Amplifiers, Receiver D-Band Tuner

a. Mechanical Description. Two cylindrical coaxial cavities are included in the D-band tuner, comprising the first and second rf amplifiers (fig. 174.1). Each cavity consists of an inner rod A, outer cylinder B, and shorting plunger C which makes contact between them. The shorting plungers are moved simultaneously by the rotation of threaded rod D, which in turn is controlled by the front panel RF AMP knob. Loop E is attached to shorting plunger C and couples the signal out of the cavity through a short length of coaxial tubing F, to which coaxial cable G is connected. Cavity Z1 with tube V1 comprises the first rf amplifier; cavity Z2 and tube V2 form the second rf amplifier. The two cavities are nearly identical. Trimmer capacitor C4 (fig. 248.2) in the first cavity is factory-set and is not normally varied in the field; trimmer capacitor C11 (H) in the second cavity is adjustable by means of the front-panel FINE TUNE knob attached to it by rod J.

b. Electrical Description (fig. 174.2).

(1) The incoming rf signal from the bandpass filter is fed through 50-ohm coaxial cable W1 to first amplifier input connector J1, and coupled to the cathode of tube V1 through capacitor C2. The input is developed across rf choke

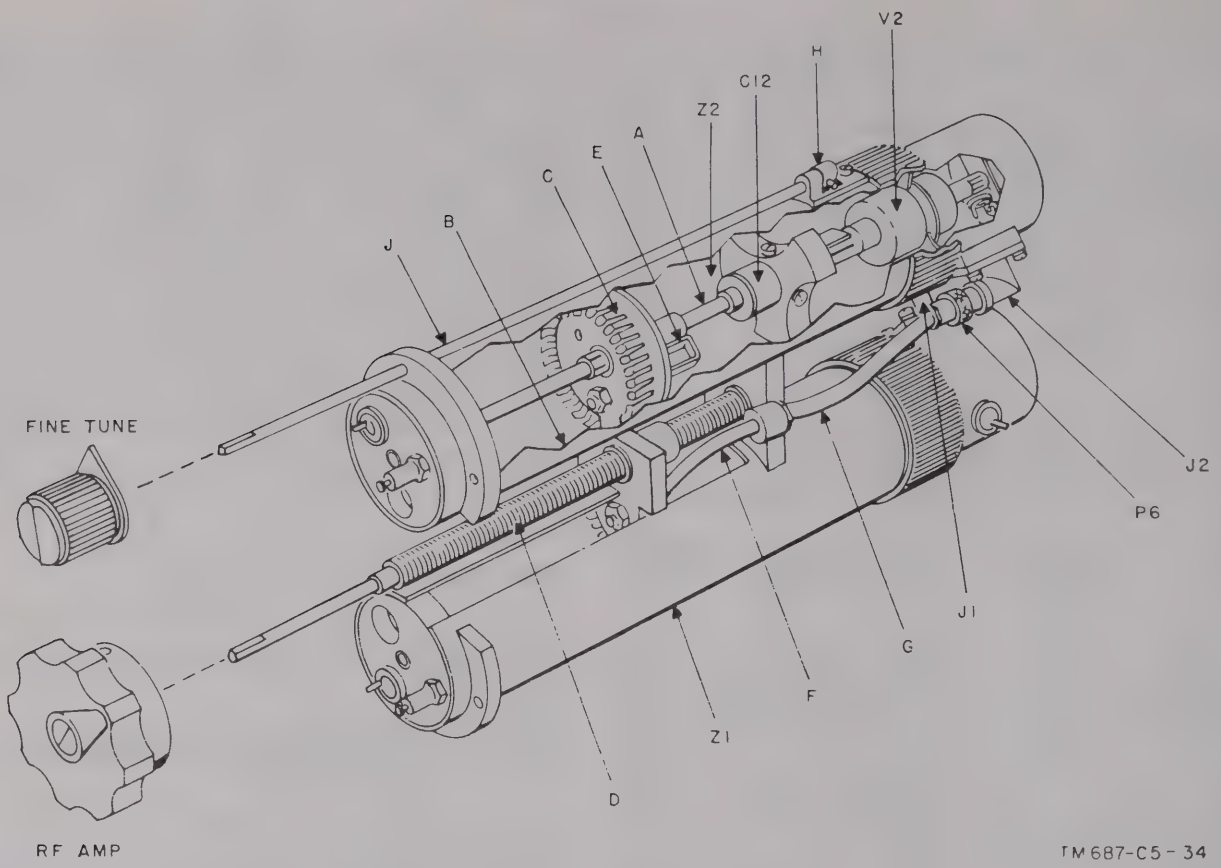

Figure 174.1. (Added) *Receiver D-band rf tuner amplifier cavity, cutaway view.*

L1, and the amplifier output is developed across the plate-tuned circuit. This circuit consists of Z1, a tuned, shorted, coaxial one-quarter wave length line (represented in the equivalent electrical diagram of figure 174.2 by capacitor C32 and inductor L21), the plate capacitance of tube V1, and trimmer capacitor C4. The amplifier output is taken from the plate-tuned circuit by a coupling loop (L22) and is applied through coaxial cable W3 and connectors P6 and J2 to the second rf amplifier stage.

(2) Cathode resistor R1 is bypassed by capacitor C1. Feed-through capacitor C5 serves both as a dc blocking capacitor for the plate lead and as a mechanical support for this lead at the point where it enters the plate-coaxial line. Capacitor C6, rf choke L3, and resistor R2 form a decoupling network for the plate-supply lead.

(3) The heater is energized by filament transformer T1 (fig. 279.1). This transformer has two separate secondary windings, which energize the heaters of tubes V1 and V2, respectively. Choke coils L1 and L2, in series with the heater leads, keep the cathode and heater at rf potentials above ground to prevent the heater-cathode capacitance from shunting the input. Capacitor C3 is an rf bypass. Rf choke coil L18 and capacitor C27 provide further decoupling of the heater lead.

(4) The second rf amplifier is virtually identical with the first, and the discussion of the first is largely applicable to the second except for the differences in the reference symbol designations of components. Note also that in addition to the RF AMP control, which varies the length of the plate coaxial lines in both rf amplifier stages, a FINE TUNE control (a cam-operated variable capacitor) is provided in the second rf amplifier. This control is

Page 316, paragraph 315, chart, item 23, "Correction" column. Delete the first entry and substitute: Check resistance readings of rf tuner (fig. 196.1, A-Band; fig. 197, B-Band; fig. 198, C-Band; fig. 198.1, D-Band).

Page 317, paragraph 316, chart, item 3, "Correction" column, fifth entry. Change "(par. 320*d* or *e*)" to: **(par. 320*c*.1–*e*.1).**

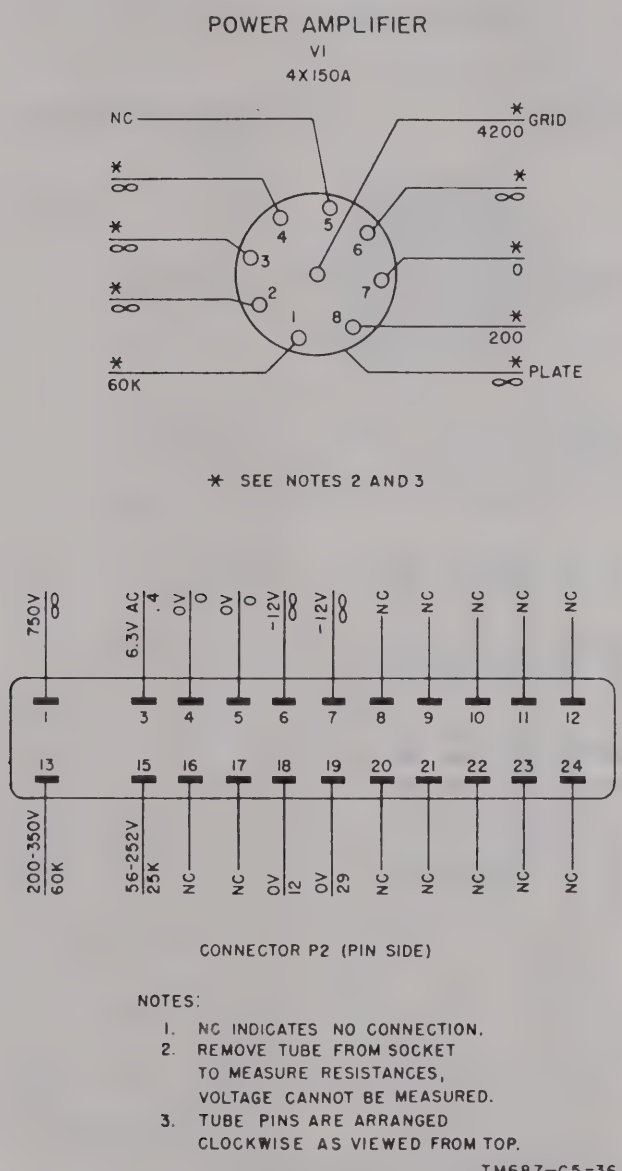

Figure 196.1. (Added) *Transmitter A-band tuner, voltage and resistance diagram.*

Page 318, paragraph 316, chart, item 8, "Correction" column, second entry. Change "(par. 320*d* or *e*)" to: **(par. 320*c*.1–*e*.1).**

Page 337, paragraph 318. Add subparagraph *i*.1 after subparagraph *i*:

i. 1. Coils of Receiver A-Band Tuner.

Reference symbol	Resistance (ohms)	Reference symbol	Resistance (ohms)
L1		L11	.051
L2		L12	.051
L3		L13	.07
L5		L14	Negligible
L6		L15	.051
L7		L16	1.2
L8		L17	.05
L9		L18	1.2
L10		L19	a

Add subparagraph *l* after subparagraph *k*:

1. Coils of Receiver D-Band Tuner.

Reference symbol	Resistance (ohms)	Reference symbol	Resistance (ohms)
L1		L11	Negligible
L2		L12	.046
L3		L13	Negligible
L4		L14	1.2
L5		L15	.04
L6		L16	.04
L7		L17	.04
L8		L18	.05
L9		L19	1.2
L10			

Page 339, paragraph 320, line 5. Change "*d*" to: ***c*.1.**

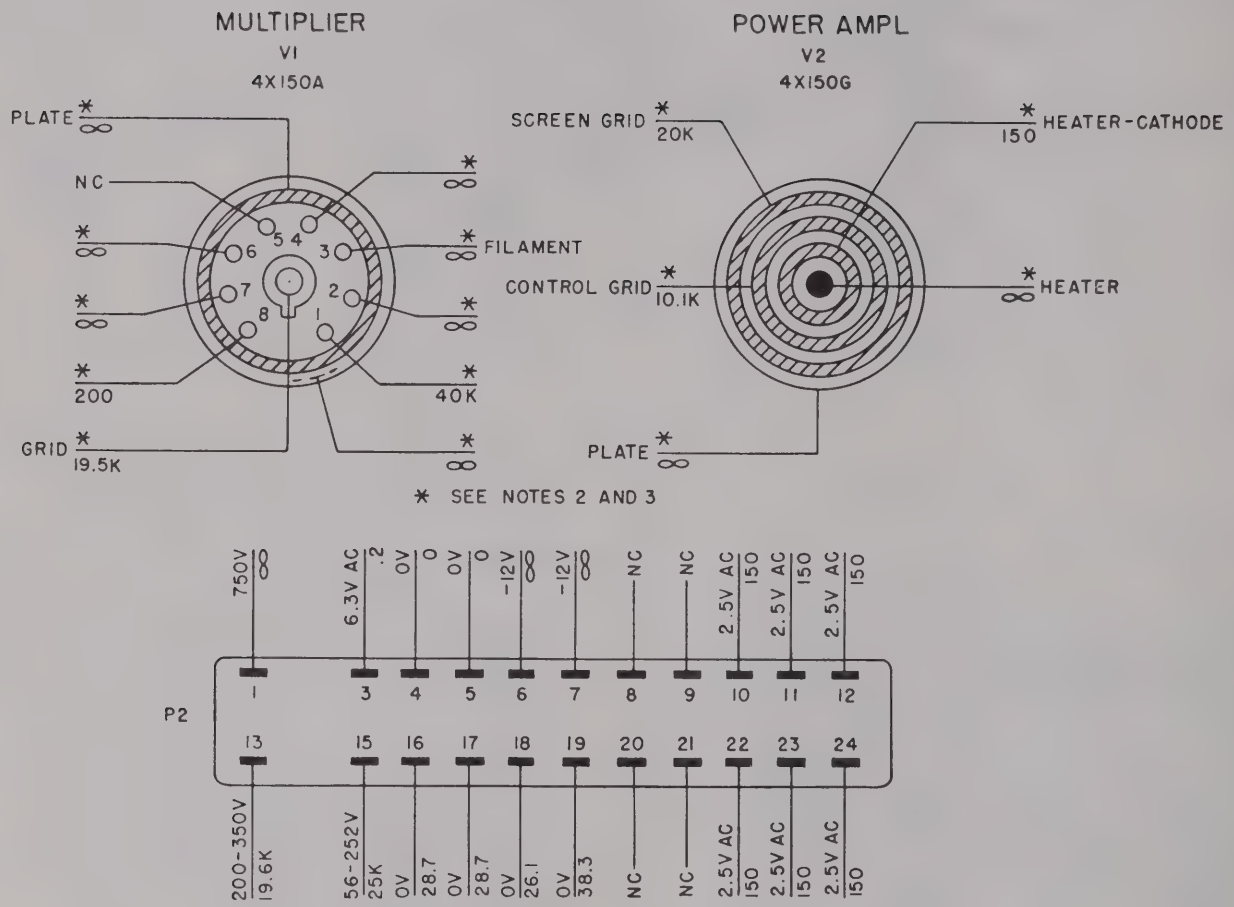

NOTES:

1. NC INDICATES NO CONNECTION.
2. REMOVE TUBE FROM SOCKET TO MEASURE RESISTANCES, VOLTAGES CANNOT BE MEASURED.
3. TUBE PINS ARE ARRANGED COUNTERCLOCKWISE AS VIEWED FROM TOP.

TM 687-CS-37

Figure 198.1. (Added) *Transmitter D-band tuner, voltage and resistance diagram.*

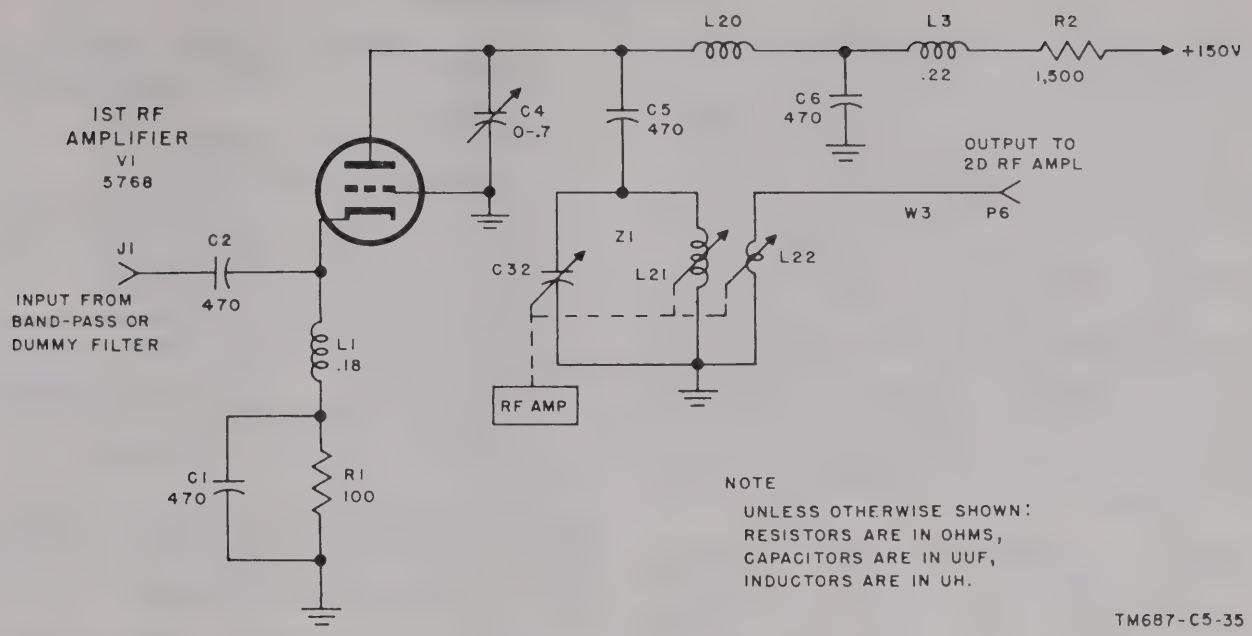

Figure 174.2. (Added) *Receiver D-band tuner, 1st rf amplifier, equivalent electrical diagram.*

used to vary the setting of trimmer capacitor C11, which serves to make the electrical tuning of the second rf amplifier stage track with the first.

279.2. Local Oscillator, Receiver D-Band Tuner (fig. 279.1)

a. Local oscillator tube V4 utilizes a modified Colpitts circuit. The oscillator tank circuit is formed by parallel inductors L11 and L13 shunted by the combination of the plate-to-cathode and grid-to-cathode interelectrode capacitances, which is effectively center-tapped to the cathode. The cathode is kept above ground potential by rf choke L15. The circuit is tuned to a frequency 30 mc below the frequency of the rf signal by inductor L11, operated by the front-panel OSC control. Inductor L13 is a trimmer for the lower portion of the D-band frequency range; this control is factory-adjusted and should not be varied during normal tuning and operation. Capacitors C17 and C20, connected across the tank circuit, are primarily temperature-compensating capacitors, although they do enter into the frquency-determining characteristics of the tank circuit. Shunted across capacitors C17 and C21, a trimmer for the upper portion of the oscillator frequency range, and C22, the afc trimmer capacitor. This capacitor is driven by the afc motor, B1, to correct the oscillator frequency in accordance with the afc error information. The output of the local oscillator is coupled through capacitor C15 to the input of the mixer stage.

b. Inductor L16, resistor R8, and capacitors C28 and C29 form a decoupling network for the plate-supply lead. Inductor L19 and capacitor C30 comprise a filter network for the +150-volt regulated supply. Resistors R7 and R6 are the grid resistors; the latter is bypassed by capacitor C24. The potential across resistor R6 is proportional to the amplitude of oscillations and is applied to the receiver MEASURE meter when the MEASURE switch is in the OSC position. Inductor L14 and capacitor C26 provide additional filtering for the voltage applied to the meter. Inductors L15 and L17 prevent the cathode-heater internal capacitance of the tube from bypassing the cathode to ground. Capacitor C16 is an rf bypass.

279.3. Mixer, Receiver D-Band Tuner (fig. 174.1)

The amplified rf signals from the second rf stage are coupled through capacitor C14 to the cathode of grounded grid mixer tube V3. Peaking coil L7 serves to broaden the frequency response of the stage. The output of the local oscillator is also applied to the mixer cathode. Inductor L8 is an rf choke and R5 is the cathode resistor. The 30-mc difference frequency be-

tween the two mixer inputs is developed in the plate-tuned circuit, consisting of inductor L12, capacitor C18, and the interelectrode capacitance of the tube. The mixer output is coupled through capacitor C23 and the 10-db attenuator pad comprised of resistors R10, R11 and R12, and through connectors J4, P3 and P4, to the if amplifier stages of the receiver. Capacitor C19, resistor R9, and capacitor C31 form a decoupling network in the plate-supply lead; inductor L9 and capacitor C30 provide filtering for the +150-volt regulated supply. Inductors L9 and L10 prevent the cathode-heater internal capacitance of the tube from bypassing the cathode to ground.

Page 283, paragraph 286*a*, line 8. Change "prase" to: **phase.**

Page 296, figure 183. Make the following changes:

At the left hand side of the drawing change "TO EITHER B- OR C-BAND R-F TUNER" to: **TO RECEIVER RF TUNER.**

Change "NOTE" to: **NOTES.**

Designate the existing note, 1.

Add the following: 2. MIXER MEASURE CIRCUIT NOT CONNECTED IN A- AND D-BAND RF TUNERS.

Chart, "METER RANGE" column, item 1. Change "0–2 MA (B-BAND) 0–2.5 MA (C-BAND) to: **0–1.5 MA (A-BAND), 0–2 MA (B-BAND), 0–2.5 MA (C-BAND), 0–5.5 MA (D-BAND).**

Page 298, figure 184. Change title of block marked "AMPLIFIER-CONVERTER AM–913/TRC OR AMPLIFIER-CONVERTER AM–914/TRC" to: **RECEIVER RF TUNER.**

Page 311, paragraph 310*c*. Delete subparagraph *c* and substitute:

c. Transmitter Rf Tuners.

Fig.	Par.	Description
11 and 11.1		Rf tuner identification.
102.1 to 108.1		Lubrication.
123.1 to 124		Tube location.
221.1 to 227.2		Circuit element location diagrams.
196.1 to 198.1		Voltage and resistance measurements.
	165	Removal from transmitter.
	337.1 to 339.1	Disassembly, cleaning, and lubrication.
	220.1 to 224.3	Theory.
268.1 to 270.1		Schematic diagrams.
291.1 to 293.1		Wiring diagrams.

Page 313, paragraph 310*q*. Delete subparagraph *q* and substitute:

q. Receiver Rf Tuners.

Fig.	Par.	Description
116.1 to 118.1		Lubrication.
131.1 to 133.1		Tube location.
243.1 to 248.3		Circuit element location diagrams.
202.1 to 204.1		Voltage and resistance measurements.
	165	Removal from receiver.
	334 and 341.1	Disassembly.
	271.1 to 271.4	Theory, A-band tuner.
	272 to 274	Theory, B-band tuner.
	275 to 279	Theory, C- band tuner.
	279.1 to 279.3	Theory, D-band tuner.
277.1 to 279.1		Schematic diagrams.
306.1 to 309		Wiring diagrams.

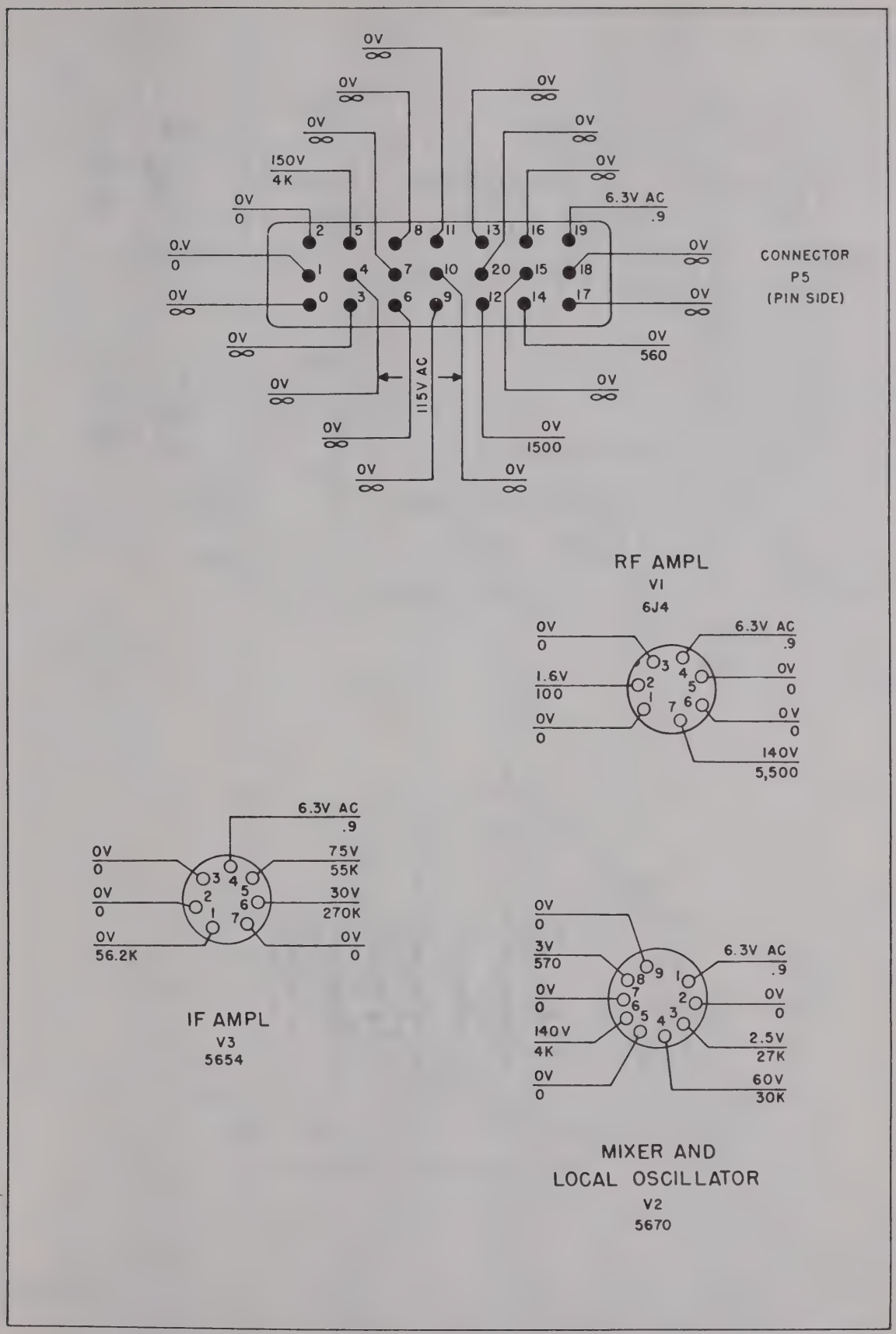

TM687-C5-38

Figure 202.1. (Added) *Receiver A-band tuner, voltage and resistance diagram.*

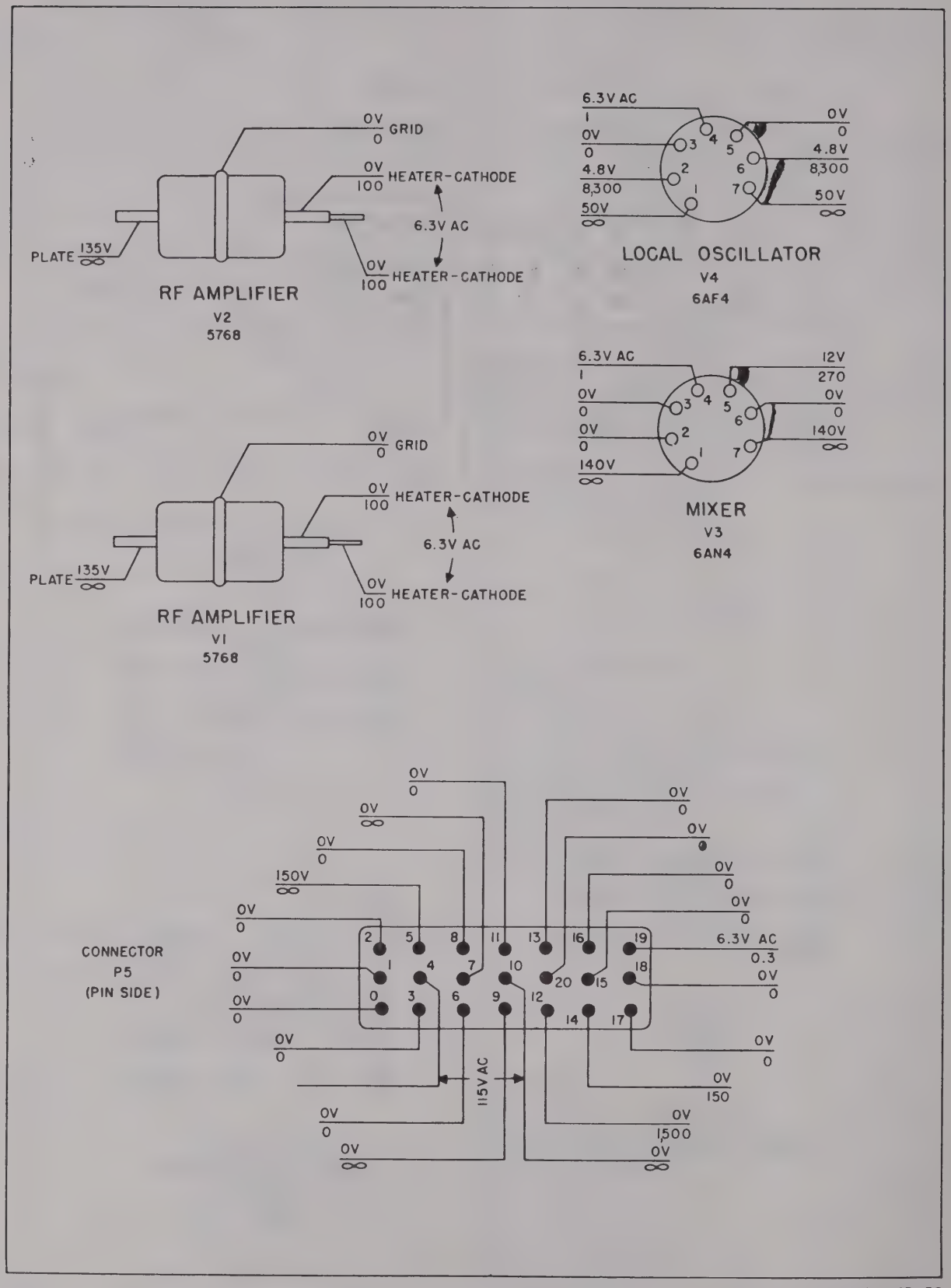

TM687-C5-39

Figure 204.1. (Added) *Receiver D-band tuner, voltage and resistance diagram.*

Page 342, paragraph 320. Add subparagraph *c.1.* after subparagraph *c*:
c.1. Signal Substitution Chart, Amplifier-Converter AM–1179/GRC.

General instructions	Stage	Signal generator			Vtvm connection	Special instructions	Normal indications
		Connection	Frequency (mc)	Output (volts)			
Remove the tuner from the receiver and connect tuner assembly to receiver with Cable CX–2406/U. Use Signal Generator AN/URM–70.	Overall gain of tuner.	Jack J1_____	75.125	0.01	Jack J2_____	Connect a 75-ohm terminating resistor between connector J2 and ground.	.12 volt minimum.
Use Electronic Multimeter TS–505/U.	Rf ampl_____	Jack J1_____	75.125	0.1	Pin 7 of tube V3.	Connect a .1-mfd capacitor between pin 4 of tube V2 and ground.	1.5 ± 0.6 volts.
Use Multimeter TS–352/U as a microammeter.	Local oscillator.	Not connected			Not connected	Remove capacitor from pin 4 of tube V2. Measure between term. 14 and 1 of test cable with microammeter.	5 to 50 ua.

Page 343, paragraph 320. Add subparagraph *e.1.* after subparagraph *e*:
e.1. Signal Substitution Chart, Amplifier-Converter AM–1177/GRC.

General instructions	Stage	Signal generator			Vtvm connection	Special instructions	Normal indications
		Connection	Frequency (mc)	Output (volts)			
Remove the tuner from the receiver and connect tuner assembly to receiver with cable CX–2406/U. Use Signal Generator AN/URM–49.	Overall tuner gain.	Jack J1_____	500.250	.1	Jack J2_____	Connect a 75-ohm terminating resistor between connector J2 and ground.	.40 volt minimum.
Use Electronic Multimeter TS–505/U.	Local oscillator.	Not connected			Not connected	Measure between term. 14 and 1 of test cable with microammeter.	5 to 50 ua.
Use Multimeter TS–352/U as a microammeter.							

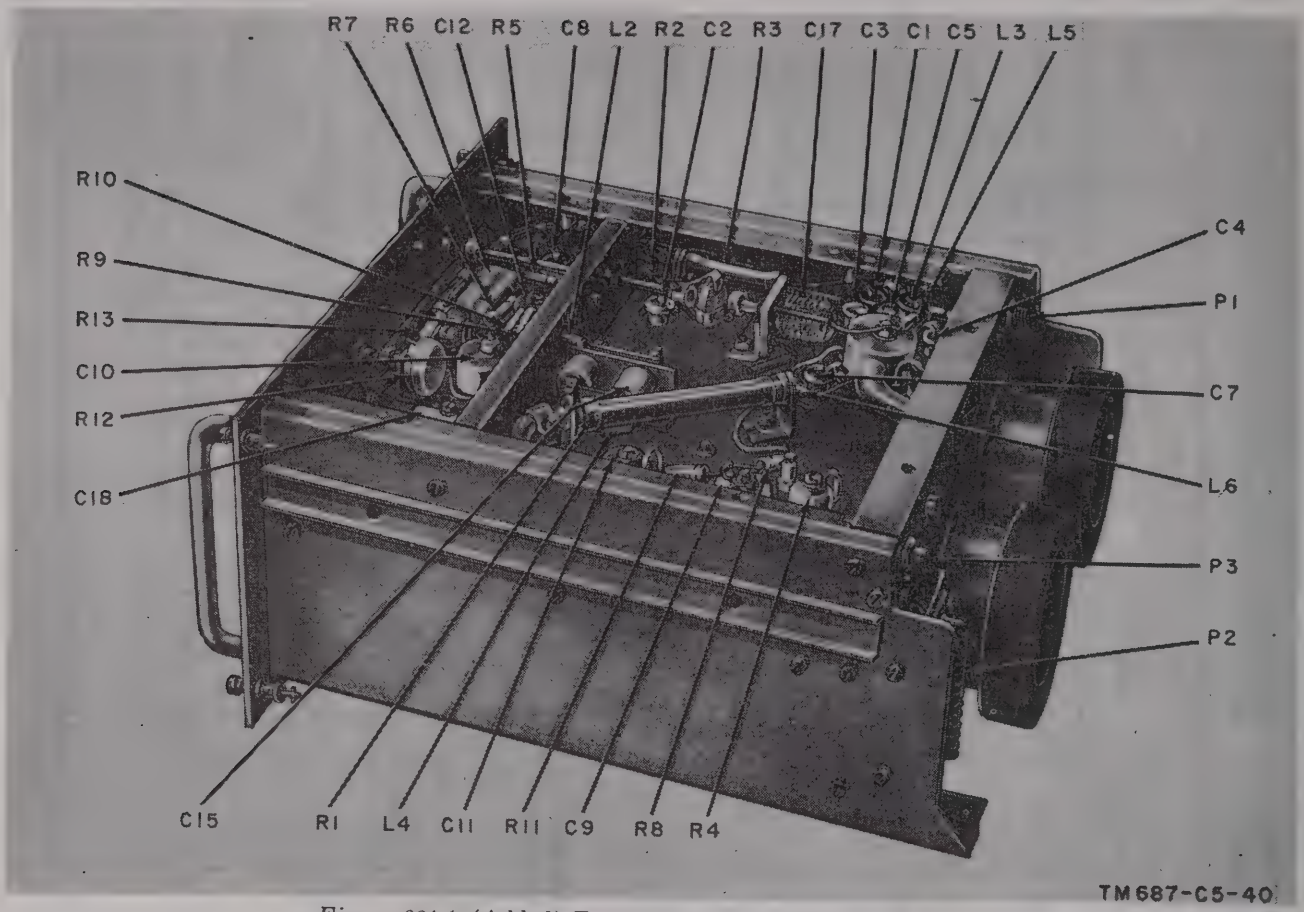

Figure 221.1. (Added) *Transmitter A-band tuner, top view.*

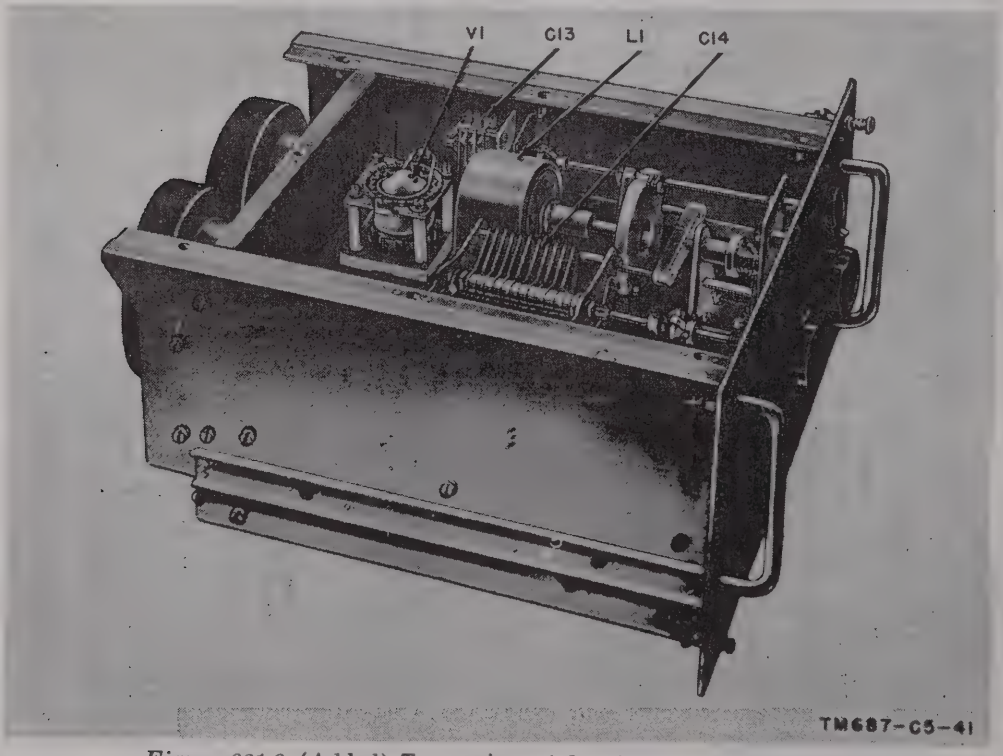

Figure 221.2. (Added) *Transmitter A-band tuner, bottom view.*

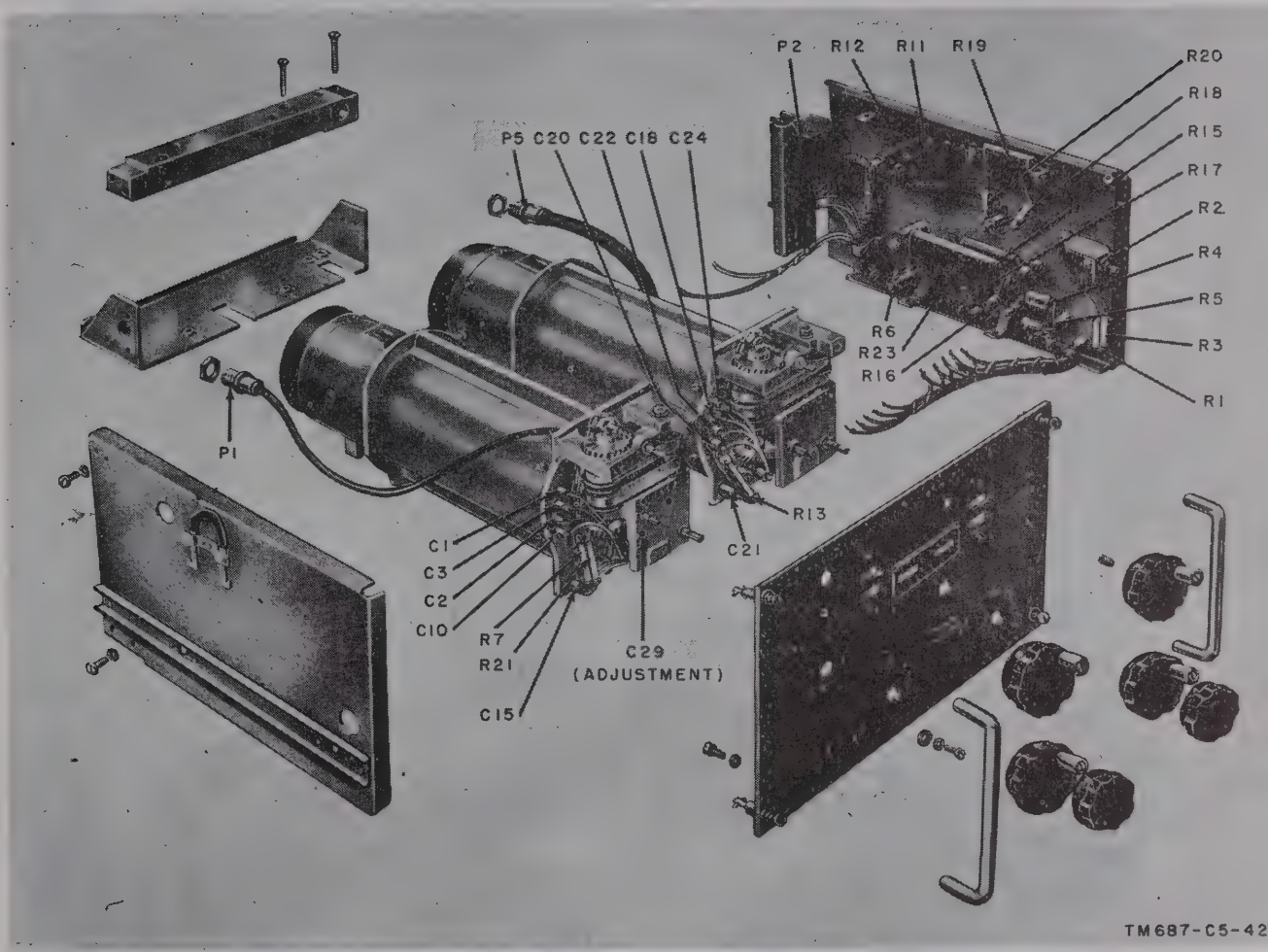

Figure 227.1. (Added) *Transmitter D-band tuner, disassembled.*

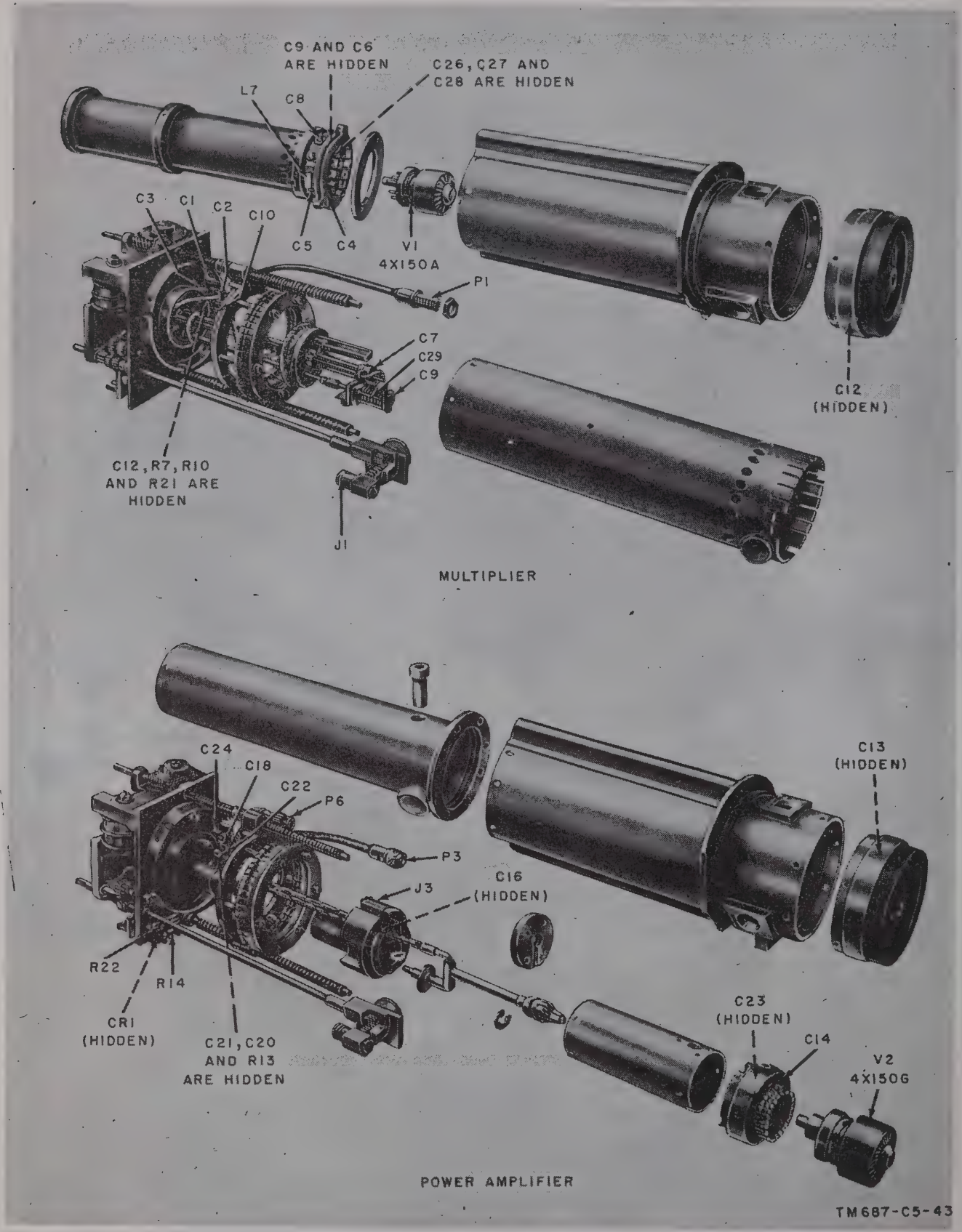

Figure 227.2. (Added) *Transmitter D-band tuner cavities, exploded view.*

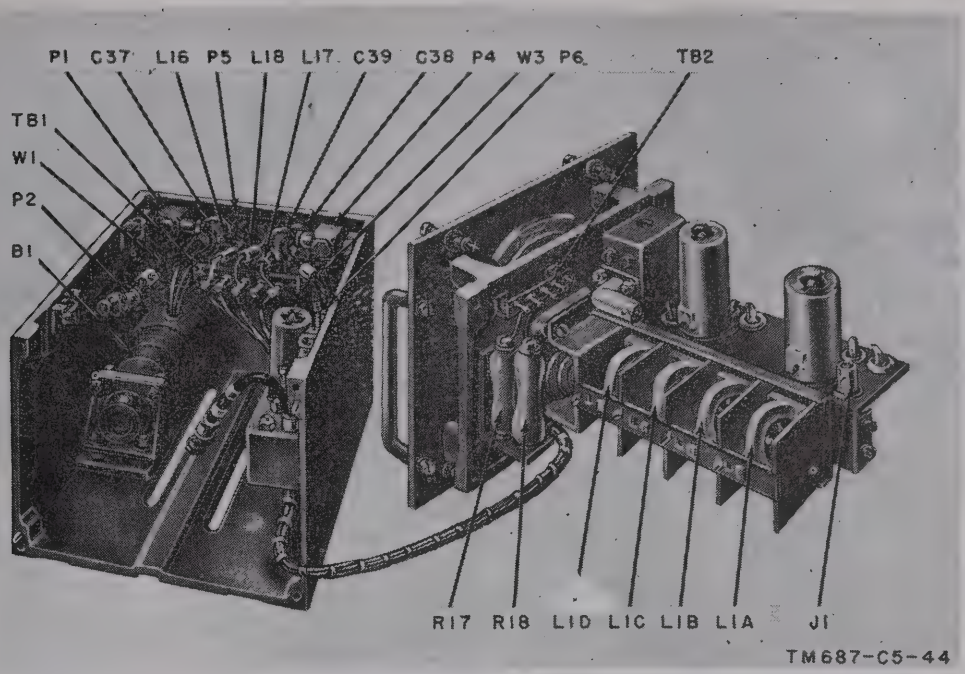

Figure 243.1. (Added) *Receiver A-band rf tuner, top view, with tuner frame.*

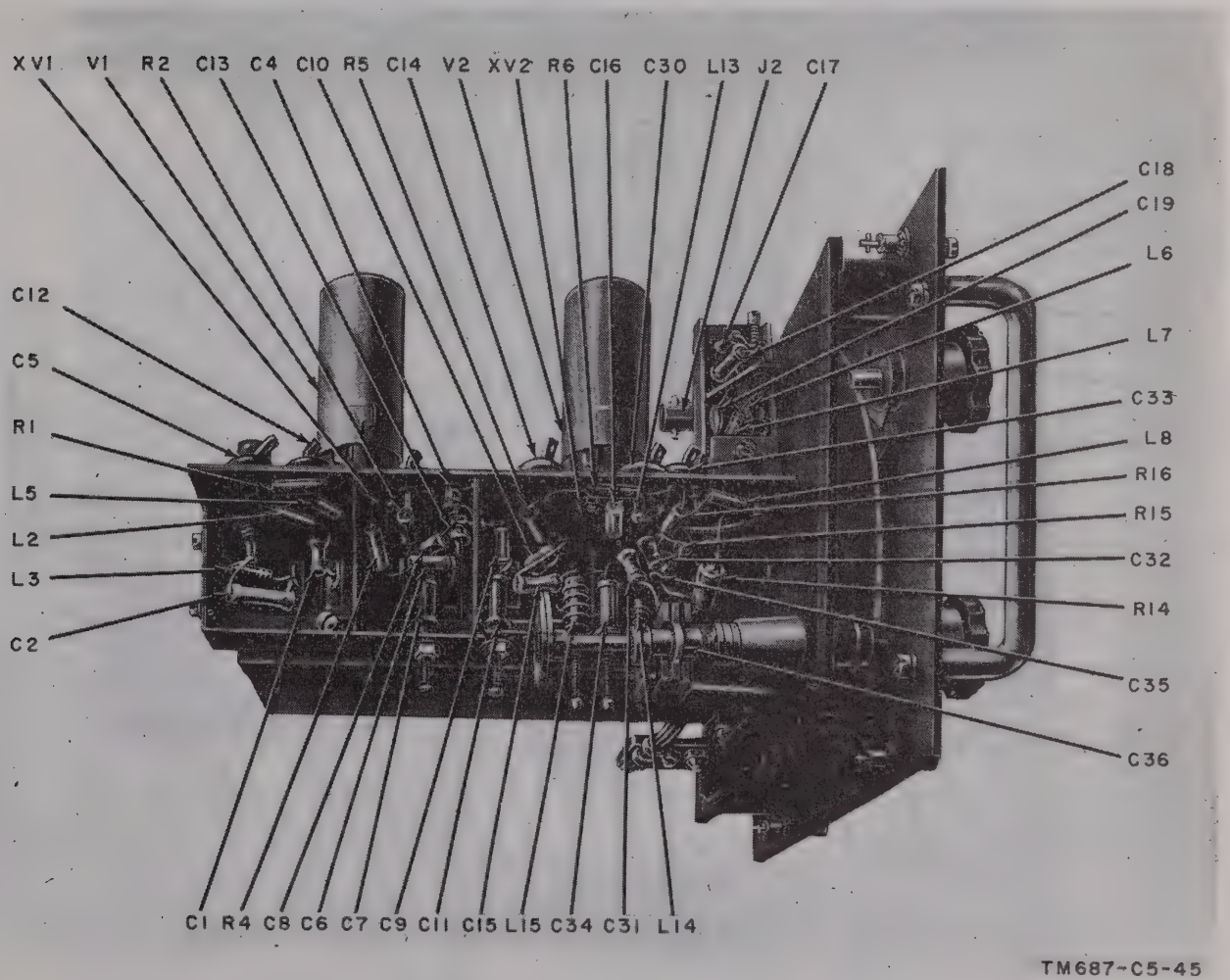

Figure 243.2. (Added) *Receiver A-band rf tuner, left-side view.*

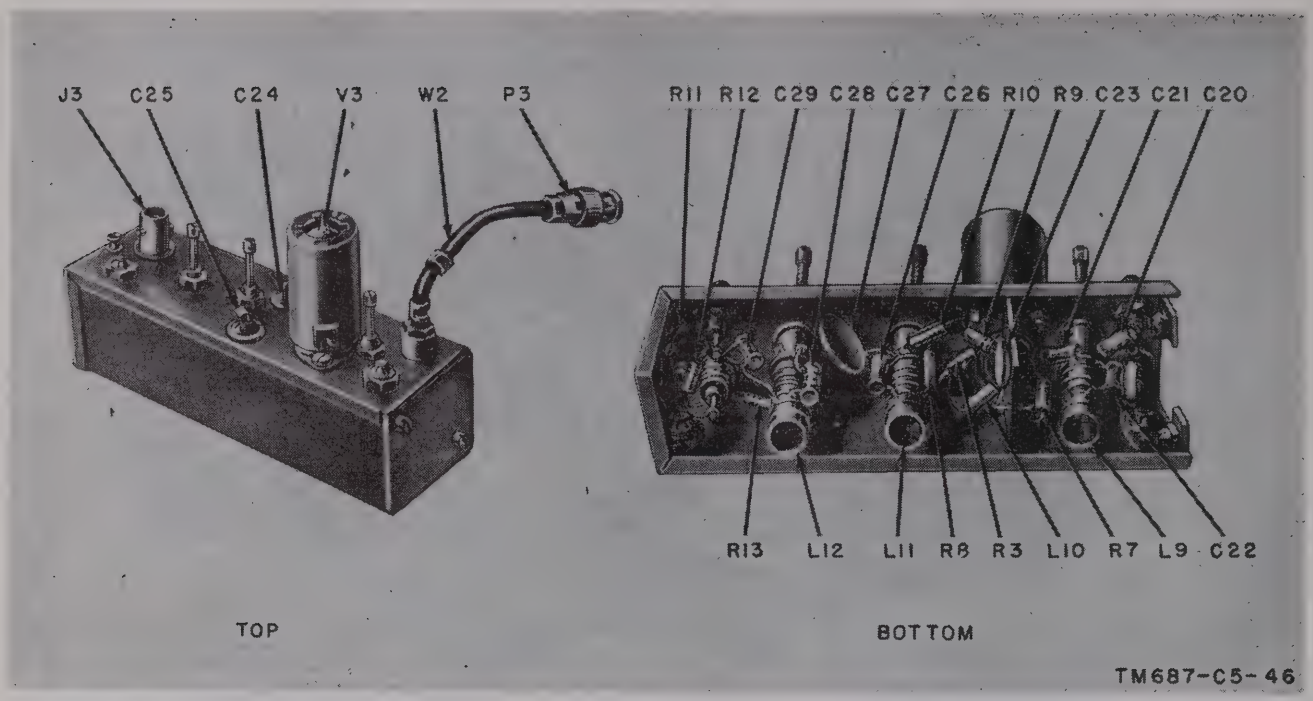

Figure 243.3 (Added) *Receiver A-band rf tuner, if preamplifier assembly.*

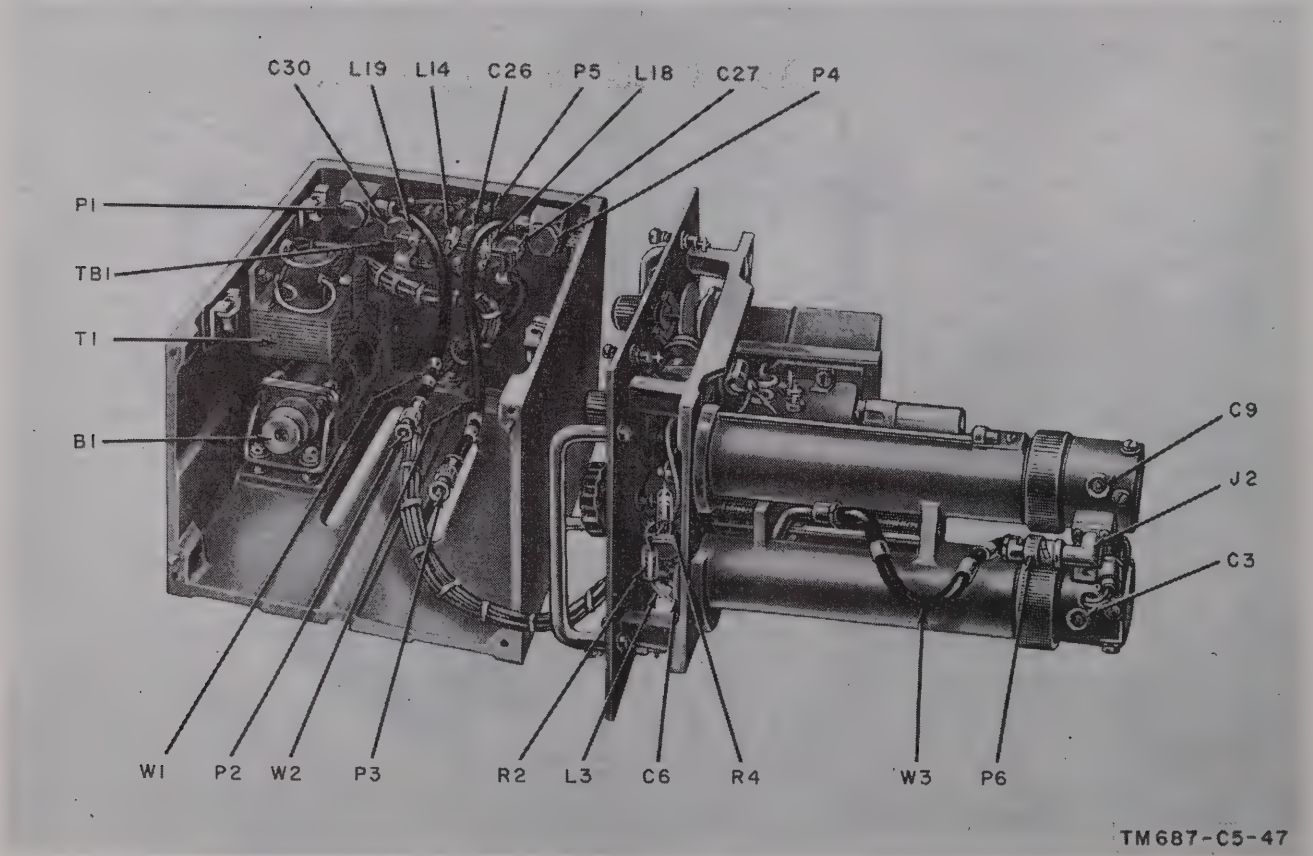

Figure 248. 1. (Added) *Receiver D-band rf tuner, right-side view, with tuner frame.*

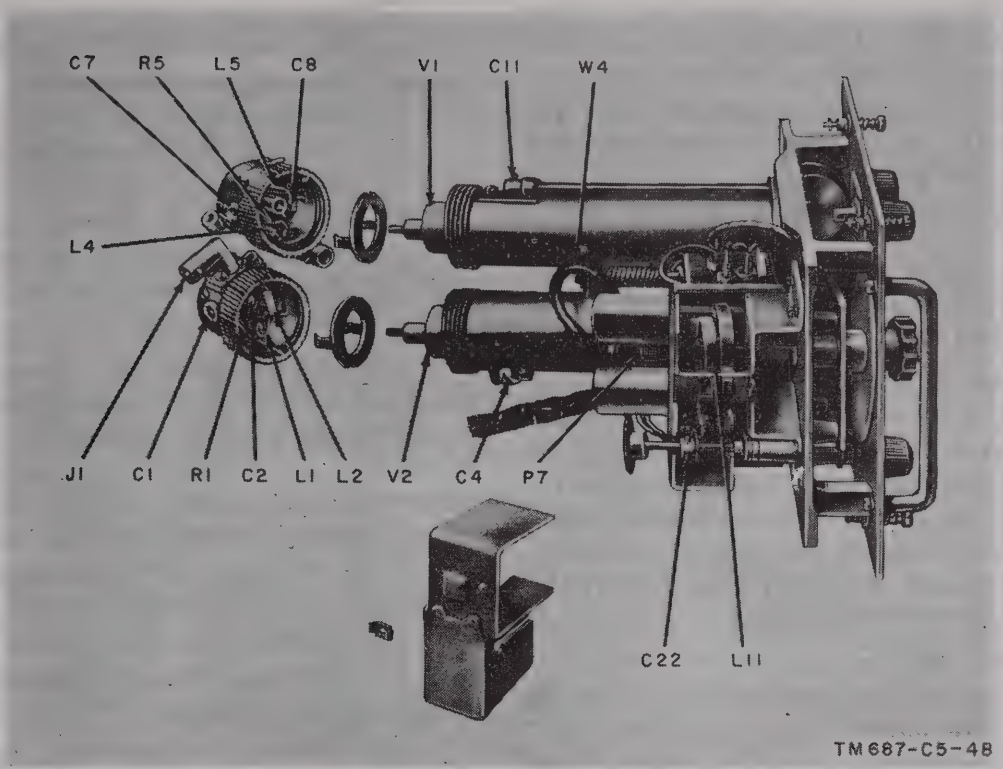

Figure 248.2. (Added) *Receiver D-band rf tuner, left-side view.*

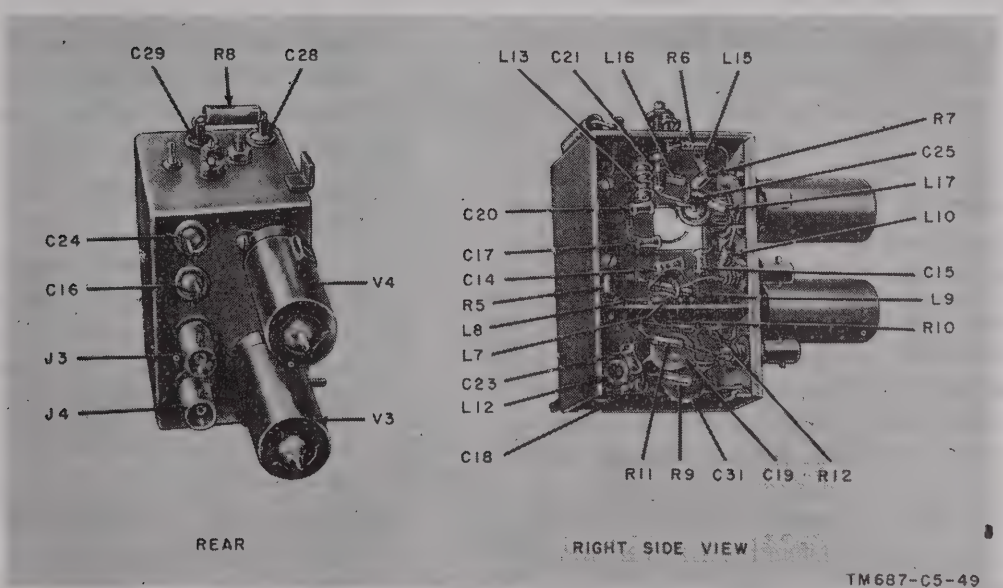

Figure 248.3. (Added) *Receiver D-band rf tuner, oscillator-mixer assembly.*

Page 391, paragraph 334*b* (1) (*d*). Delete subparagraph (*d*) and substitute:

(*d*) In the receiver C-band tuner only, loosen the two screws which hold the rear of the tuner chassis to the bottom of the large casting.

Page 392, paragraph 334*d*. Make the following changes:

Subparagraph (1). Delete the last sentence and substitute: In the receiver A-band rf tuner, the afc capacitor is C36; in the B-band rf tuner, C19; in the C-band rf tuner, C24; in the D-band

rf tuner, C22; and in the transmitter, C145. Subparagraph (2). Delete the first sentence and substitute: For the transmitter or the receiver A- and B-band rf tuners, set the AFC control knob to —5, and for the receiver C- and D-band rf tuners to +5.

Add paragraph 337.1 after paragraph 337:

337.1. Disassembly, Lubrication, and Reassembly of Radio Frequency Amplifier AM–1180/GRC

Disassembly is not required for lubrication or replacement of electrical parts, since all components are accessible when the top and bottom cover plates are removed. Disassembly for replacement of mechanical components is readily accomplished; all panels are secured by screws to the main chassis (fig. 257.1). To remove the front panel, proceed as follows:

a. Remove the top and bottom covers by loosening the cam-lock fasteners that secure them to the side panels.

b. Loosen the set screws (12, fig. 257.1) and remove the two control knobs (11).

c. Remove the four screws (20) and four lockwashers (19) that secure the two handles (14).

d. Remove the screw (3) and washers from the center of the front panel.

Page 400. Add paragraph 339.1 after paragraph 339:

339.1. Disassembly, Lubrication, and Reassembly of Radio Frequency Amplifier-Multiplier AM–1178/GRC

Radio Frequency Amplifier-Multiplier AM–1178/GRC (transmitter D-band rf tuner) consists of a multiplier cavity unit on the left hand side of the tuner and a power-amplifier cavity unit on the right hand side. Remove the vacuum tubes as described in paragraphs 148.1 and 150.2. Follow the procedures outlined in *a* through *g* below for disassembly of the tuner. After disassembly has been accomplished, follow the procedure outlined in *h* below for reassembly of the tuner.

a. Removal of Front Panel.

(1) Remove the top and bottom covers of the tuner by removing the eight screws and eight lockwashers that secure the covers to the tuner.

(2) Loosen the set screws and remove the six control knobs (1, fig. 263.1).

(3) Remove the four screws (10), four lockwashers (11), and the two plates (3A and 3B) that secure the two handles (2).

(4) Remove the six screws (12), six lockwashers (13), and six flat washers (14) that secure the cavities to the front panel (4).

b. Gaining Access to Tape Drums. The disassembly procedure for gaining access to tape drums for the purpose of lubrication is outlined in (1) through (6) below. Follow the same procedure for disassembly of the multiplier and power-amplifier tape drums. Before reassembly, clean and lubricate the drums in accordance with the lubrication chart (fig. 108.1).

(1) Remove the front panel (*a* above) after setting the GRID control to minimum frequency.

(2) Unhook the grid tape (1, fig. 263.2) from the gear-driven drum (2). Pull the tape on the storage drum (3); hold the storage drum to unhook the tape.

Caution: **Do not release the tape unless the storage drum is held and allowed to unwind slowly, because damage to the spring could result.**

(3) Remove the three screws (4) that secure the small casting (5) to the large casting (6).

Caution: **Do not remove the small casting unnecessarily. Its removal will necessitate alinement of capacitor C29 with respect to the grid shorting plunger (*h* below).**

(4) Loosen the set screws on the gear (7) and slide the gear off the drum shaft.

(5) Remove the retaining ring (8) and lift out the storage drum shaft cover (9).

(6) To remove the plate tape (10), rotate the plate control shaft in a counterclockwise direction until a mechanical stop is reached. Unhook the plate tape from the gear-driven drum. Pull the tape on the storage drum to unhook the tape.

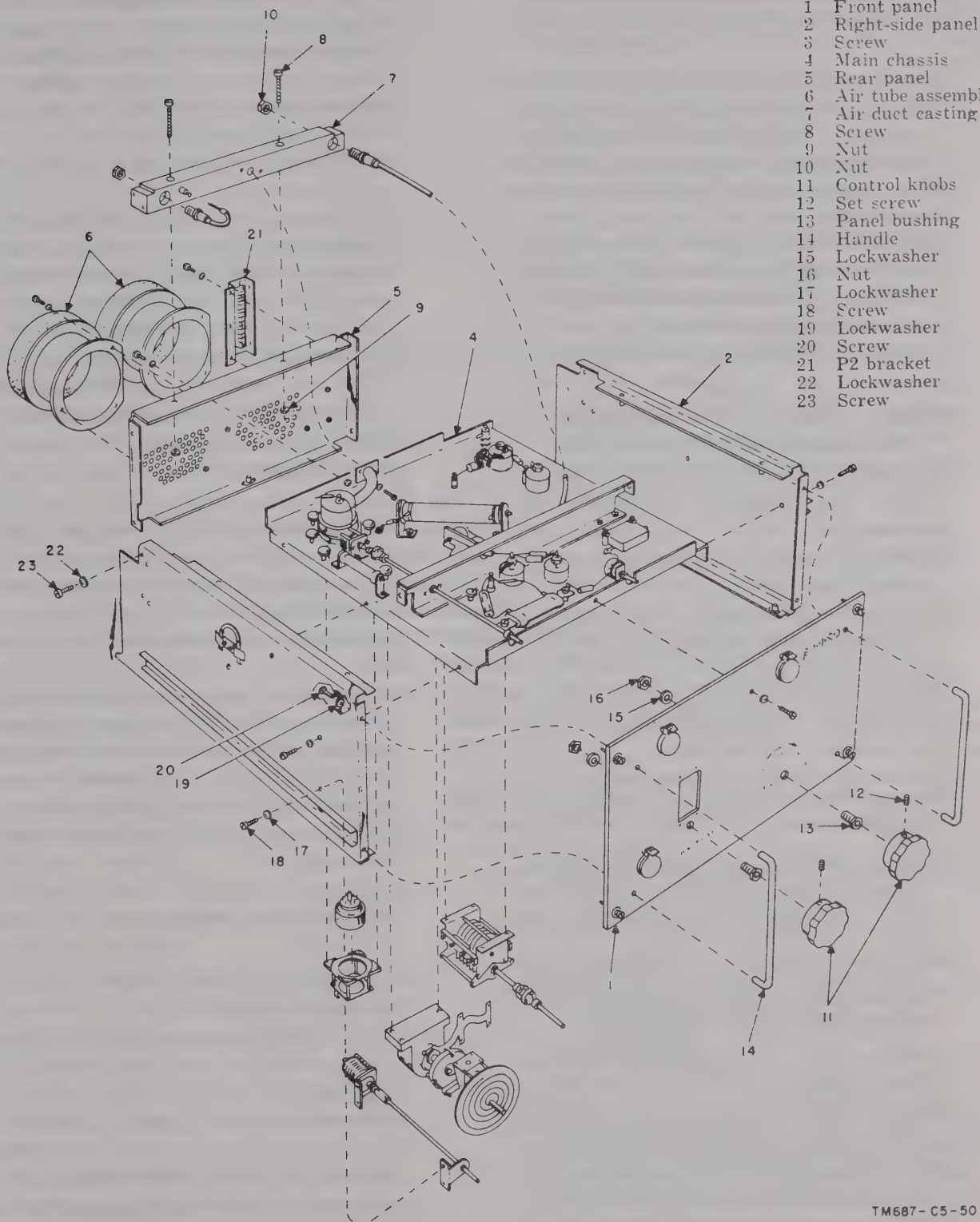

Figure 257.1. (Added) *Transmitter A-band rf tuner, exploded view.*

c. Removal of Plate Contact and Capacitor Assembly.

Note. The procedure for removing the plate contact and capacitor assembly outlined in (1) and (2) below is the same for the multiplier and power-amplifier cavities.

(1) Unsolder the external plate lead connected to the lug on the cavity plate assembly (accessible from the rear of the assembly), and pull the wire out through the hole in the rubber air tube assembly.

(2) Remove the six screws (21, fig. 263.4) and the six lockwashers (22) that secure the plate contact assembly (3) to the outer cylinder (2).

(3) Pull the assembly out of the cavity.

d. Removal of Air Casting.

(1) Remove the two screws (15, fig. 263.1) on each side of the air casting (5).

(2) Remove the two screws (16) that secure the casting to connector P2 bracket (6).

(3) Remove the nuts (17) that secure connectors P1 and P5.

(4) Remove the two screws (18) that secure the casting to each cavity.

e. Removal of Outer Cylinder.

Note. The procedure for removing the outer cylinder, outlined in (1) through (4) below, is the same for the multiplier and power-amplifier assemblies.

(1) Adjust the output assembly (11, fig. 263.4) to its minimum coupling position.

(2) Remove the three screws (13) and the three lockwashers (14) that secure the output assembly to the outer cylinder (2).

(3) Remove the six screws (17) and six lockwashers (18) that secure the outer cylinder to the front casting (9).

(4) Pull the outer cylinder away from the front casting.

f. Removal of Inner Cylinder. The procedure for removing the inner cylinder from the multiplier cavity is outlined in (1) through (4) below. The procedure for removing the inner cylinder from the power-amplifier cavity is outlined in (5) through (7) below.

(1) To remove the inner cylinder (4) of the multiplier, remove the screw (15, fig. 263.3) and the lockwasher (16) that secure the capacitor C29 assembly (5) to the inner tubing assembly.

(2) Remove the four screws (17) and the four lockwashers (18) that secure the inner cylinder to the front casting (9).

(3) Unsolder the four wires at capacitors C1, C3, C2, and C10.

(4) Pull the inner cylinder away from the front casting.

(5) To remove the inner cylinder of the power-amplifier, remove the eight screws (15, fig. 263.4), eight lockwashers (16), and the air tube (10) that secure the inner cylinder (1).

(6) Remove the four screws (17) and the four lockwashers (18) that secure the inner cylinder to the front casting (9).

(7) Pull the inner cylinder away from the front casting.

g. Removal of Inner Tubing Assembly. The procedure for removing the inner tubing assembly from the multiplier cavity is outlined in (1) through (9) below. The procedure for removing the inner tubing assembly from the power-amplifier cavity is outlined in (10) through (19) below.

(1) To remove the inner tubing assembly of the multiplier, remove the eight screws (19, fig. 263.3) and the eight lockwashers (20) that secure the inner cylinder to the inner tubing (4).

(2) Pull the inner tubing out of the inner cylinder.

(3) Remove the strap connection (12) at the terminal mounted on the inner tubing.

(4) Unsolder the wire at capacitor C7 (6).

(5) Unscrew capacitor C7.

(6) Remove the retaining ring (10) to permit removal of the grounding spring washer.

(7) Remove the four screws and the four lockwashers that secure the tubing flange (8) to the front casting.

(8) Remove the pin that secures the capacitor C29 assembly (5) to the insulated shaft (7).

(9) Rotate the control shaft to remove the screw follower from the threaded

shaft. Remove the tubing assembly and shorting plunger assembly by rotating the control shaft until the plunger is free from the control shaft threads.

(10) To remove the inner tubing assembly of the power-amplifier, unsolder the wires at capacitors C24, C18, C22, and C20.

(11) Remove P6 from J3.

(12) Remove the five screws (19, fig. 263.4) and five lockwashers (20) that secure the contact assembly (4) to the inner tubing (5).

(13) Pull the contact assembly away from the inner tubing.

(14) Remove the screw (27) and the lockwasher (28) that secure the inner tubing assembly to the front casting (9).

(15) Pull the inner tubing assembly away the front casting.

(16) Remove the grid shorting plunger assembly (8) by rotating the control shaft until the plunger is free from the control-shaft threads.

(17) Remove the four screws (23) and the four lockwashers (24) that secure the support disk assembly (6) to the inner tubing assembly.

(18) Remove the four screws (25) and the four lockwashers (26) that secure the adapter assembly (7) to the inner tubing.

(19) Pull the inner tubing away from the adapter assembly.

h. Reassembly. Reassemble the tuner by reversing the order of disassembly, giving special attention to the instructions outlined in (1) through (8) below.

(1) Check to see that contact fingers of all shorting plungers make proper contact.

(2) Check the wiring of each tube and all circuit components before assembling the tube.

(3) Check to see that the output coupling has been assembled so that movement corresponds to the front-panel marking.

(4) Check to see that the assembled shorting plunger is parallel within .010 inch to the machined rear surface of the front casting.

(5) Check to see that the insulators are not shorted during reassembly, and are free from dirt and chips.

(6) When replacing the amplifier-multiplier grid tapes, lock one set screw in each gear of the gear-driven tape drum. Leave the second set screw loose. This is necessary for the adjustment of the tapes, outlined in *i* below.

(7) Move the multiplier grid-cavity shorting plunger to the position closest to the front casting.

(8) Adjust capacitor C29 for maximum capacitance (capacitor plates fully engaged) and lock the set screws in the worm wheel on the shaft.

i. Tape Adjustment. Follow the procedure outlined in (1) through (8) below for presetting the tuner controls. Follow the preliminary starting procedure outlined in (9) through (11) below. Follow the procedure outlined in (12) through (23) below for adjusting the multiplier grid tape. Follow the procedure outlined in (24) through (27) below for adjusting the multiplier plate tape.

Note. The procedure outlined in (1) through (8) below is made without regard to the individual tape dial readings. The channel selected for tuning the multiplier-amplifier is channel 130.

(1) Rotate the multiplier grid control knob in a counterclockwise direction until a mechanical stop is reached.

(2) To adjust the multiplier grid to the selected channel (channel 130), rotate the control knob 67¼ turns in a clockwise direction.

(3) Rotate the multiplier plate control knob in a counterclockwise direction until a mechanical stop is reached.

(4) To adjust the multiplier plate to the selected channel, rotate the plate control knob 33¼ turns in a clockwise direction.

(5) Rotate the amplifier grid control knob in a counterclockwise direction until a mechanical stop is reached.

(6) To adjust the amplifier grid to the selected channel, rotate the grid control knob 8½ turns in a clockwise direction.

(7) Rotate the amplifier plate control knob in a counterclockwise direction until a mechanical stop is reached.

(8) To adjust the amplifier plate to the selected channel, rotate the plate control knob 32¼ turns in a clockwise direction.

Note. The procedure outlined in (1) through (8) above is at approximate settings.

(9) Follow the preliminary starting procedure outlined in paragraphs 91 and 92.

(10) Turn on the power supply by following the procedure outlined in paragraphs 93 and 94.

(11) Preset the transmitter controls following the procedure outlined in paragraphs 95 through 104.

(12) Adjust the amplifier-multiplier tuner following the procedure outlined in paragraph 105*b.1* (1) through (20).

(13) Note the difference obtained between the individual dial tape readings and the selected channel.

Note. To obtain the correct dial tape reading for the individual grid tapes, the tape readings obtained in (13) above must be subtracted from the selected channel setting (channel 130). This error is then added to or subtracted from the dial tape reading obtained in (18) below. The error is added when the reading obtained in (13) is below the selected channel and subtracted when the reading obtained in (13) is above the selected channel. An error of ±5 channels from the selected channel setting is allowed.

Example: In tuning the multiplier-amplifier to the selected channel (channel 130), the multiplier grid dial tape reads channel 110. This reading is subtracted from the selected channel to obtain an error in the grid tape position of 20 channels. This error, being below channel 130, is added to the grid tape reading obtained in (18) below, say, channel 90. To correct the dial tape reading, the tape is adjusted to 20 channels above 90, or channel 110.

(14) Turn off the power supply.

(15) Remove the amplifier-multiplier from the transmitter and set the chassis in an upright position.

(16) Remove the top and bottom covers of the tuner by removing the eight screws and eight lockwashers that secure the covers to the tuner.

(17) Rotate the multiplier grid control knob until the set screw in the gear of the gear-driven tape drum is visible at the access hole (7, fig. 263.1) in the left-side panel.

(18) Note the grid dial tape reading.

(19) Obtain the new dial tape reading by following the example given in (13) above.

(20) To adjust the grid tape, place a screwdriver in the slotted shaft (12, fig. 263.2) of the gear-driven tape drum.

Caution: **Hold the screwdriver firmly in the slotted shaft while the set screws are loose. Sudden unwinding of the storage drum will cause serious damage to the spring and tape.**

(21) Loosen the set screws.

(22) Rotate the slotted shaft until the dial tape reading obtained in (19) above is directly under the hairline on the front panel.

(23) Lock the set screws.

(24) To adjust the multiplier plate tape, place a screwdriver in the slotted shaft (13, fig. 263.2) of the gear-driven tape drum.

(25) Loosen the set screws.

(26) Rotate the shaft until the dial tape reading (130) lies directly under the hairline on the front panel.

(27) Lock the set screws.

(28) To adjust the power amplifier grid tape, follow the procedure outlined in (17) through (23) above. The set screws necessary for the adjustment of the amplifier grid tape can be located through an access hole (8, fig. 263.1) on the front panel.

(29) Follow the procedure outlined in (24) through (27) above for the adjustment of the amplifier plate tape.

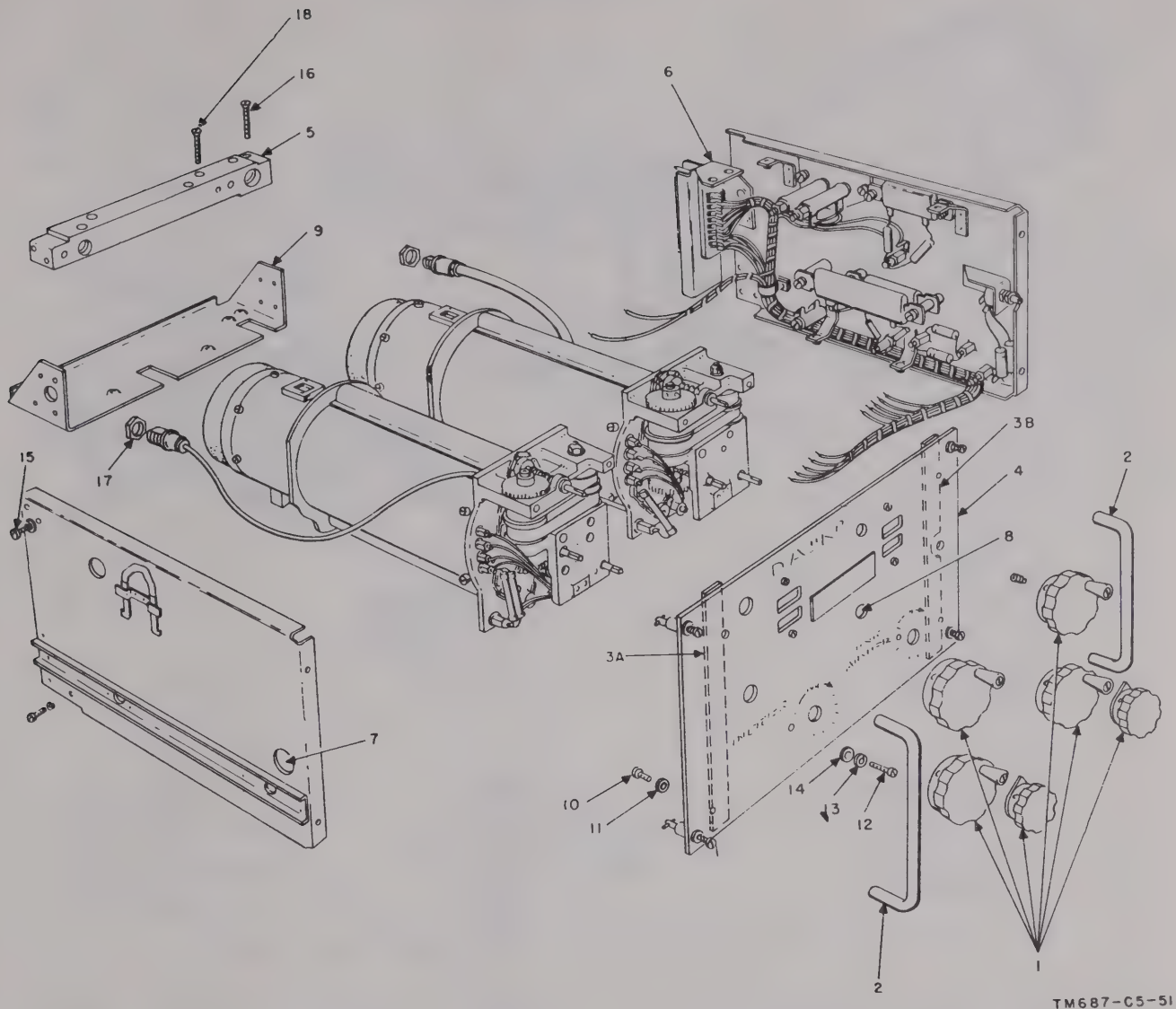

1	Control knobs	7	Access hole	13	Lockwasher
2	Handles	8	Access hole	14	Flat washer
3	Plates: A, left	9	Scuff plate	15	Screw
	B, right	10	Screw	16	Screw
4	Front panel	11	Lockwasher	17	Nut
5	Air casting	12	Screw	18	Screw
6	P2 bracket				

Figure 263.1. (Added) *Transmitter D-band rf tuner, exploded view.*

(30) Reassemble and secure the top and bottom covers of the tuner.

(31) Return the amplifier-multiplier to the transmitter.

(32) Repeat the procedure outlined in (9) through (14) above.

Note. An error of ±15 channels from the desired channel is allowed.

(33) In an error (greater than 15 channels) is indicated, repeat the procedure outlined in (15) through (29).

Page 403. Add paragraph 341.1 after paragraph 341:

341.1. Disassembly, Lubrication, and Reassembly of Radio Frequency Amplifier-Converter AM–1177/GRC

Radio Frequency Amplifier-Converter AM–1177/GRC (receiver D-band rf tuner) is a plug-in unit consisting of two coaxial cavity rf amplifiers and a mixer-oscillator chassis mounted on

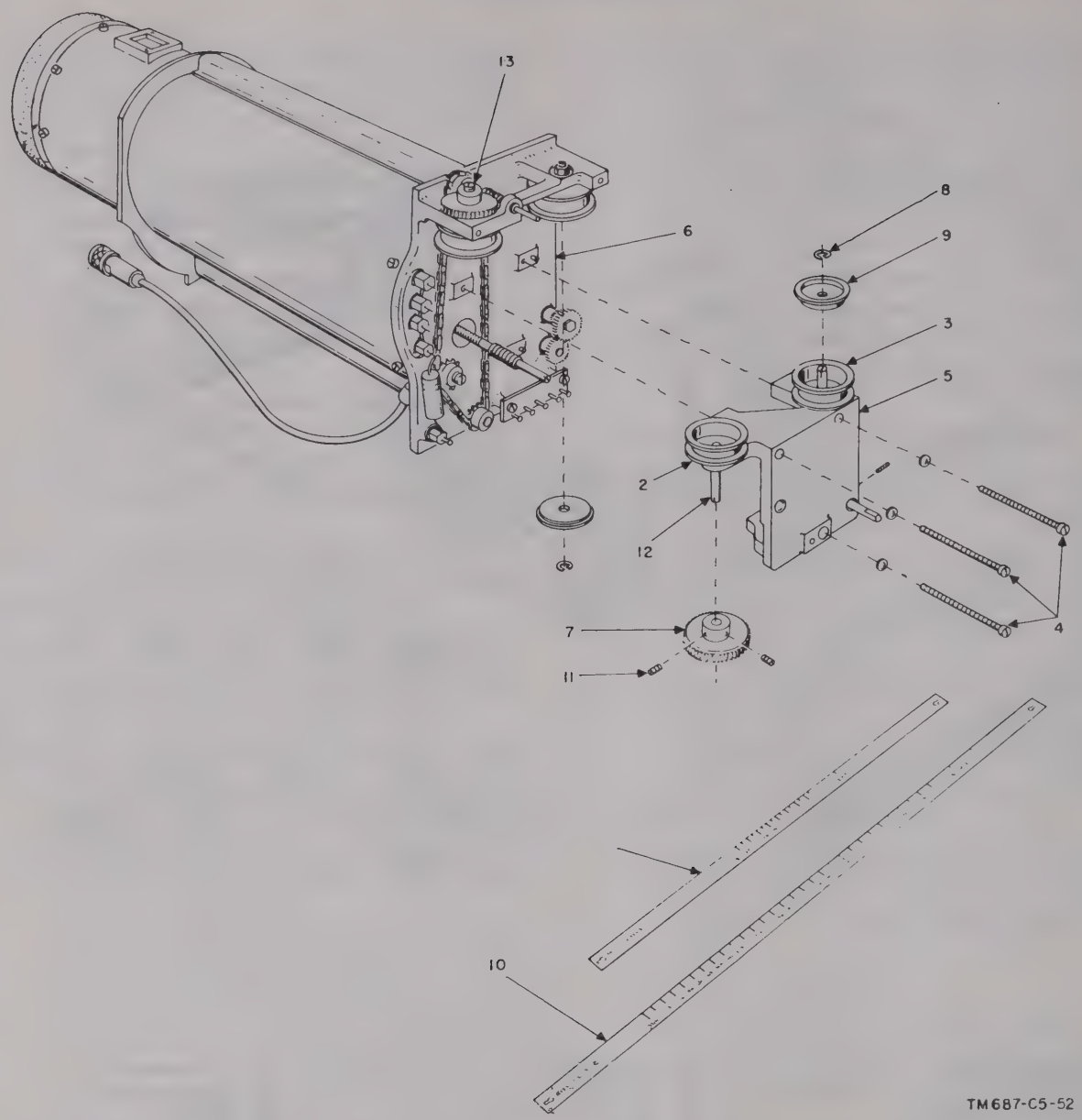

1 Grid tape
2 Gear-driven drum
3 Storage drum
4 Screws
5 Small casting
6 Large casting
7 Gear
8 Retaining ring
9 Storage drum cover
10 Plate tape
11 Set screw
12 Slotted shaft
13 Slotted shaft

Figure 263.2. (Added) *Transmitter D-band rf tuner, partially exploded view.*

the front casting. Follow the procedure outlined in *a* through *f* below for the disassembly of the tuner. After disassembly and lubrication have been completed, follow the procedure outlined in *g* below for reassembly of the tuner.

a. Removal of Front Panel.

(1) Remove the cover by turning the four cam-lock fasteners ¼ turn to the left.

(2) To remove the front panel, loosen the set screws and remove the five control knobs (2, fig. 263.5).

(3) Remove the four screws (13), four lockwashers (14), and four flat washers (15) that secure the front panel (1) to the front casting (3).

(4) Pull the front panel away from the front casting.

b. Gaining Access to Tape Drums. The dis-

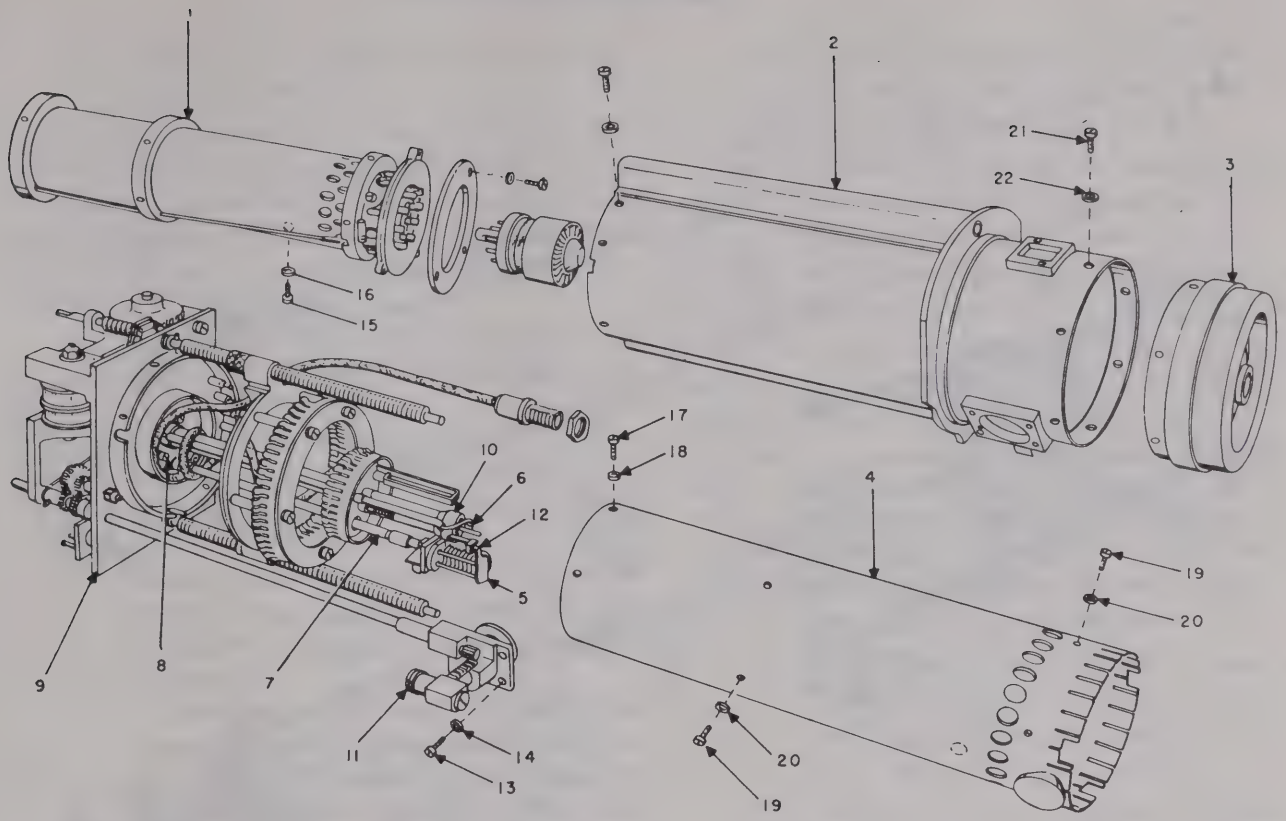

1	Inner cylinder	8	Tubing flange	15	Screw
2	Outer cylinder	9	Front casting	16	Lockwasher
3	Plate contact assembly	10	Retaining ring	17	Screw
4	Inner tubing	11	Output assembly	18	Lockwasher
5	Capacitor C29 assembly	12	Strap connection	19	Screw
6	Capacitor C7	13	Screw	20	Lockwasher
7	Insulated shaft	14	Lockwasher		

Figure 263.3. (Added) *Transmitter D-band rf tuner multiplier, exploded view.*

assembly procedure for gaining access to the tape drums for the purpose of lubrication is outlined in (1) through (6) below. Before reassembly, clean and lubricate all parts in accordance with the lubrication chart (fig. 118.1).

(1) Remove the front panel (*a* above).

(2) Rotate the control shaft (5, fig. 263.5) in a counterclockwise direction until a mechanical stop is reached.

(3) Hold the storage drum (6) firmly; unhook the tape (7) from the gear-driven drum (4).

Caution: **Allow the storage drum to unwind slowly. Sudden unwinding of the storage drum will cause serious damage to the spring and tape.**

(4) Remove the tape from the storage drum.

(5) Loosen the set screws and remove the gear (8) from the shaft.

(6) Remove the retaining ring and lift out the storage drum shaft cover.

c. Removal of Front Casting Assembly. Follow the procedure outlined in (1) through (4) below to remove the front casting. Before reassembly, clean and lubricate all parts in accordance with the lubrication chart (fig. 118.1).

(1) Use a $\frac{5}{16}$-inch spin type wrench or equivalent to remove the four screws (17, fig. 263.5) that secure the front casting to the back casting (9).

(2) Remove W2 from J4.

(3) Remove W1 from J1.

(4) Pull the front casting assembly away from the back casting.

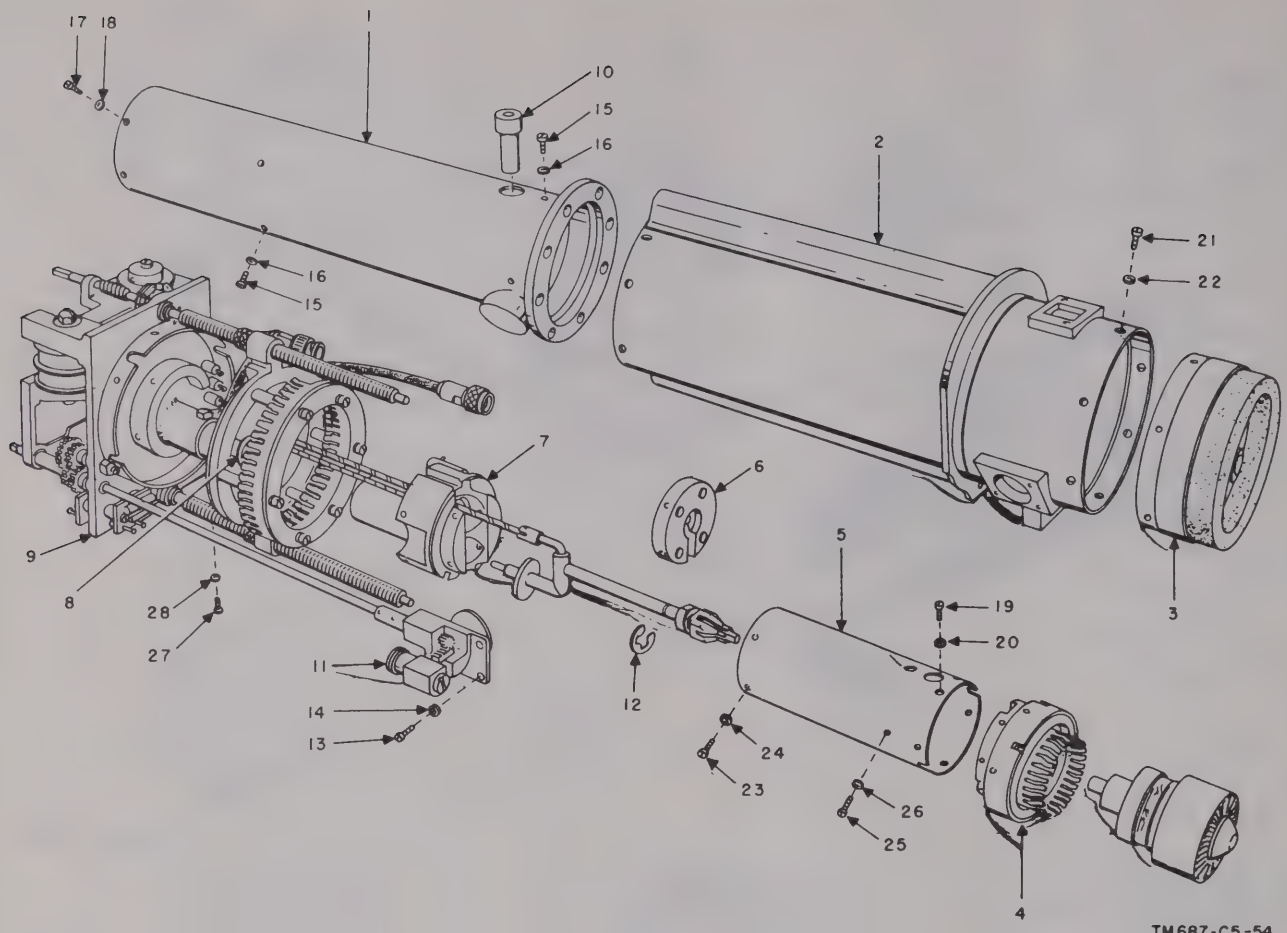

1	Inner cylinder	11	Output assembly	20	Lockwasher
2	Outer cylinder	12	Retaining ring	21	Screw
3	Plate contact assembly	13	Screw	22	Lockwasher
4	Contact assembly	14	Lockwasher	23	Screw
5	Inner tubing	15	Screw	24	Lockwasher
6	Support disk assembly	16	Lockwasher	25	Screw
7	Adapter assembly	17	Screw	26	Lockwasher
8	Grid shorting plunger	18	Lockwasher	27	Screw
9	Front casting	19	Screw	28	Lockwasher
10	Air tube				

Figure 263.4. (Added) *Transmitter D-band rf tuner, power amplifier, exploded view.*

d. Removal of Cavity Cap and Socket Assembly. The procedure ((1) through (5) below) for removing the cap and socket assembly is the same for the first rf and second rf amplifiers.

(1) To remove the cap and socket assembly of the second rf amplifier only, remove W3 from J2.

(2) Unscrew the cavity cap (1, fig. 263.6) until it is free from the outer cylinder (4) threads.

(3) Pull the cap and socket assembly away from the outer cylinder.

(4) Remove the tube (3) from the socket.

(5) Remove the washer keyway (2).

e. Removal of Coaxial Cavity Assembly. Remove the cavity assembly as follows:

(1) To remove the coaxial cavity assembly, remove the pin that secures the worm gear (11, fig. 263.5) to the control shaft (5).

(2) Pull the worm gear away from the control shaft.

(3) Unsolder R4 from L6 (fig. 248.1). Unsolder R2 from L3.

(4) Remove W4 from J3.

(5) Remove the five screws (16) that secure the cavity assembly to the front casting.

(6) Pull the cavity assembly away from the front casting.

f. Removal of Shorting Plunger Carriage Assembly. Follow the procedure outlined in (1) through (5) below for the removal of the carriage assembly. Before reassembly, clean and lubricate all parts in accordance with the lubrication chart (fig. 118.2).

(1) Loosen the set screw in the cam follower (9, fig. 263.6) and remove the control shaft (19).

(2) Remove the retaining ring (11), flat washer (12), and spring washer (13) that secure the fine tune control shaft (8) to the mounting plate.

(3) Remove the three screws (14) and the three screws (15) that secure the coil and capacity assembly (7) to the outer cylinder (4).

Caution: **Be extremely careful when removing the carriage assembly from the outer cylinder to prevent the contact fingers from catching in the plate mounting holes at the end of the tubes and becoming distorted.**

(4) Pull the carriage assembly (6) away from the outer cylinder.

(5) Remove the mechanical stop pins (16) and (17). Rotate the control shaft until the carriage assembly is free from the shaft threads.

g. Reassembly. To reassemble the tuner, reverse the order of disassembly and give special attention to the instructions outlined in (1) through (6) below.

(1) Check to see that the contact fingers of the shorting plunger make proper contact.

(2) Check the wiring of each tube and all circuit components before assembling the tube.

(3) Check to see that all of the reassembled parts are free from dirt and chips.

(4) Position the plate contact assembly so that the surface of the end plate (20, fig. 263.6) is centered with respect to the electrical contact assembly (10) and the cam follower (9); tighten the set screws (18) in the coil and capacitor assembly.

(5) Clean and lubricate the afc motor (12, fig. 263.5) in accordance with the lubrication chart (fig. 118.1).

(6) When replacing the rf amplifier tape, lock one set screw in the gear of the gear-driven drum. Leave the second set screw loose. This is necessary for the adjustment of the tape (*h* below).

h. Tape Adjustment. Follow the procedure outlined in (1) through (10) below for the adjustment of the rf amplifier tape.

Note. The channel selected for the mechanical alinement of the rf amplifier tape is channel 80. An error of ±5 channels from the selected channel is allowed.

(1) Rotate the rf amplifier control knob in a counterclockwise direction until a mechanical stop is reached.

(2) To adjust the amplifier to the selected channel (channel 80), rotate the control knob 12 turns in a clockwise direction. Note the tape reading.

(3) Subtract the tape reading ((2) above) from the selected channel.

Note. The difference obtained here indicates the approximate error in tape positioning.

(4) Rotate the control knob until the locked set screw is accessible at the bottom of the front casting assembly. Note the tape reading.

(5) Add the difference obtained in (3) above to the reading of (4) above if the reading of (2) above is below the selected channel. Subtract the difference obtained in (3) above from the reading of (4) above if the reading (2) above is above the selected channel. The tape is then adjusted to the sum of difference.

(6) To adjust the tape, place a screwdriver in the slotted shaft of the gear-driven drum.

Caution: **Hold the screwdriver firmly in the slotted shaft while the set screws are loose. Sudden unwinding of the storage drum will cause serious damage to the spring and tape.**

(7) Loosen the set screw.

(8) Rotate the slotted shaft until the tape

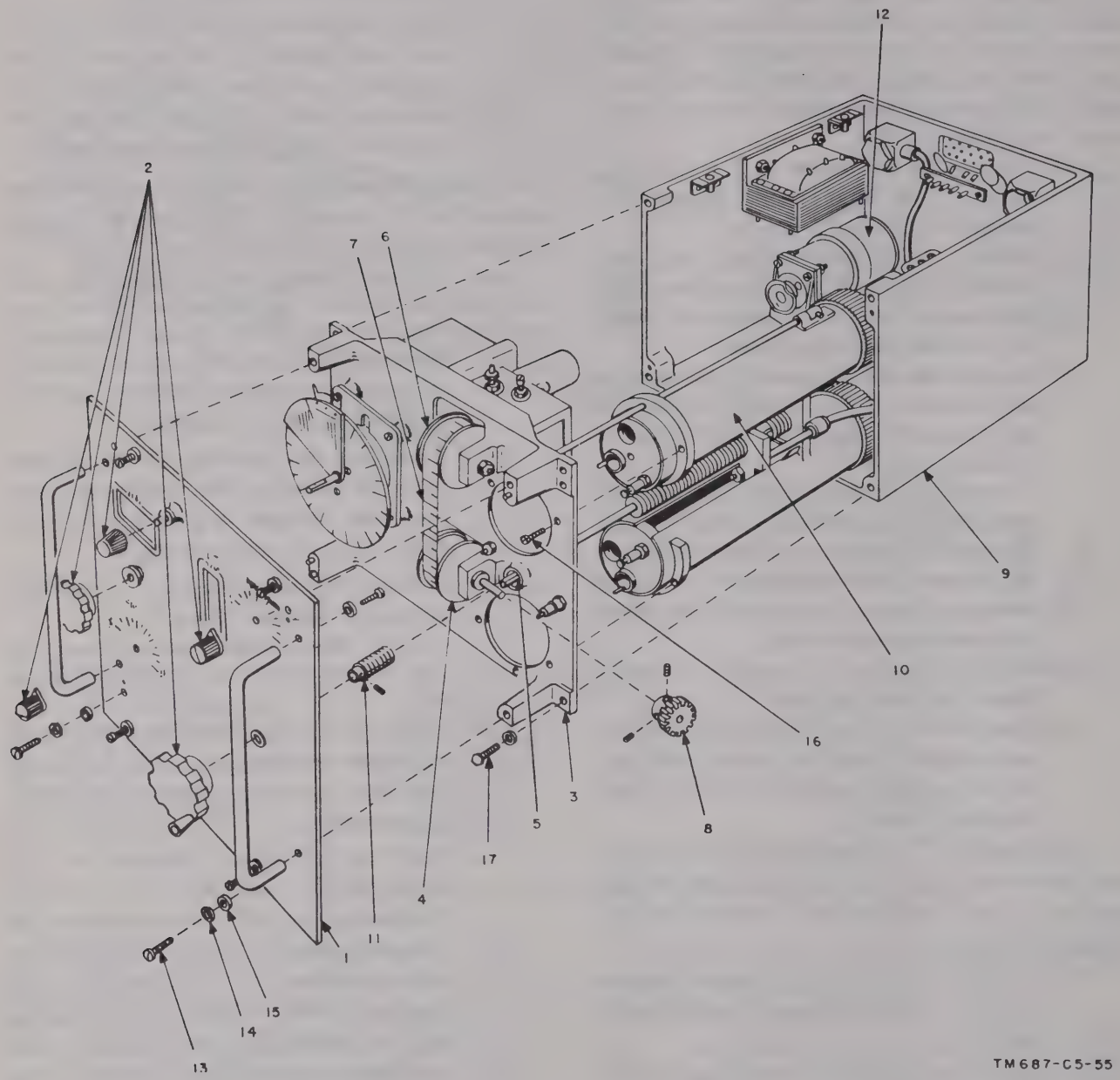

1	Front panel	7	Tape	13	Screw
2	Control knobs	8	Gear	14	Lockwasher
3	Front casting	9	Back casting	15	Flat washer
4	Gear-driven drum	10	Coaxial cavity assembly	16	Screw
5	Control shaft	11	Worm gear	17	Screw
6	Storage drum	12	Afc motor		

Figure 263.5. (Added) *Receiver D-band rf tuner, disassembled view.*

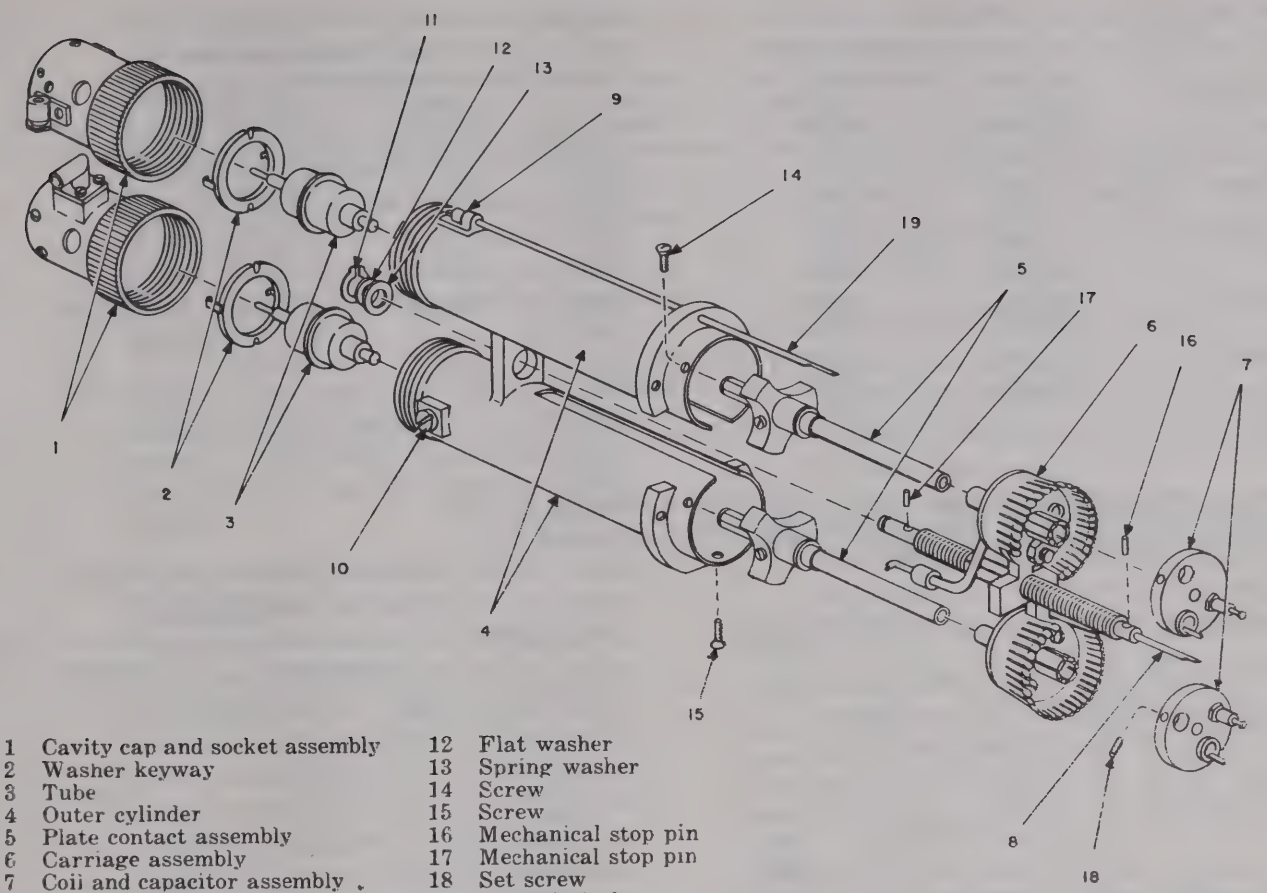

1 Cavity cap and socket assembly
2 Washer keyway
3 Tube
4 Outer cylinder
5 Plate contact assembly
6 Carriage assembly
7 Coil and capacitor assembly
8 Fine tune control shaft
9 Cam follower
10 Electrical contact assembly
11 Retaining ring
12 Flat washer
13 Spring washer
14 Screw
15 Screw
16 Mechanical stop pin
17 Mechanical stop pin
18 Set screw
19 Control shaft
20 End plate (structural part of the plate contact assembly)

Figure 263.6. (Added) *Receiver D-band rf tuner. amplifier cavities, exploded view.*

reading obtained ((5) above) is directly under the hairline on the front panel.

(9) Lock the set screws.

(10) This completes the reassembly of the D-band receiver tuner. It must be alined and tracked before operation. Refer to the final test procedure in paragraph 362.1.

Page 404, paragraph 343, chart. Add after "Signal Generator TS-497/URR":

Quantity	Test equipment	Manual
1	Signal Generator AN/URM-49.	Applicable literature.

Page 428, paragraph 356, heading. After "Filters" add: for Bands A, B, and C.

Page 429, paragraph 356c, chart. Add the following at the beginning of the chart, before F-192/U:

Band-pass filter	Checking calibration			Adjusting calibration		
	AN/URM-70 freq (mc)	TS-497/URR freq (mc)	Rf channel	AN/URM-70 freq (mc)	TS-497/URR freq (mc)	Rf channel
F-238/U	50.375	55.375	2 ±3	54.125	59.125	17
	57.875	52.875	32 ±3			
F-239/U	58.875	63.875	36 ±3	62.625	67.625	51
	66.375	71.375	66 ±3			

Band-pass filter	Checking calibration			Adjusting calibration		
	AN/URM-70 freq (mc)	TS-497/URR freq (mc)	Rf channel	AN/URM-70 freq (mc)	TS-497/URR freq (mc)	Rf channel
F-240/U	67.375	72.375	70 ±3	71.125	76.125	85
	74.875	79.875	100 ±3			
F-241/U	75.875	80.875	104 ±3	79.375	84.375	118
	83.375	88.375	134 ±3			
F-242/U	84.375	89.375	138 ±3	88.125	93.125	153
	91.875	96.875	168 ±3			
F-243/U	92.875	97.875	172 ±3	96.625	101.625	187
	100.375	105.375	202 ±3			

Page 430, paragraph 356*d*, chart. Make the following changes: Add to the beginning of the chart, before "Filter F-192/U":

Band-pass filter	Test No.	AN/URM-70 freq (mc)	TS-497/URR freq (mc)	Output on panoramic indicator (db)	
				Minimum	Maximum
F-238/U	1	54.1	49.1	+19	
	2	49.8[a]	44.8	—10	—1
	3	58.5	53.5	—10	—1
F-239/U	1	62.6	58.6	+19	
	2	57.6	52.6	—12	—3
	3	67.6	62.6	—15	—5
F-240/U	1	71.1	66.1	+19	
	2	65.4	60.4	—14	—3
	3	76.8	71.8	—16	—7
F-241/U	1	79.4	74.4	+19	
	2	73.0	68.0	—17	—7
	3	85.7	80.7	—19	—9
F-242/U	1	88.1	83.1	+19	
	2	81.1	76.1	—17	—7
	3	92.2	90.2	—21	—11
F-243/U	1	96.6	91.6	+19	
	2	88.9	83.9	—19	—8
	3	104.4	99.4	—24	—13

Add the following footnote to the chart:

[a]Use another Signal Generator TS-497/URR in place of Signal Generator AN/URM-70 for this frequency.

Page 431. Add paragraph 356.1 after paragraph 356:

356.1. Final Test of Band-Pass Filters for D-Band

a. General. The final test for a D-band band-pass filter consists of checking and, if necessary, adjusting the dial calibration, and of checking the insertion loss at a frequency to which the band-pass filter is tuned and at frequencies other than the tuned frequency.

b. Test Circuit. The band-pass filters are tested in the receiver by comparison with an input level necessary to maintain a certain SIG LEV meter reading with or without the filter in place. The frequency of the test points is determined by the internal calibrator of a Radio Receiver R-417/TRC. The procedure for this test, which is the same for each of the D-band filters, is as follows:

(1) Connect the calibrator cable from the CAL OUT jack to the ANTENNA jack of the receiver. With the dummy filter in place, tune the receiver to the appropriate calibration (red) mark on

the OSC dial of the D-band tuner, for the particular filter under test, in accordance with the chart in *c* below.

(2) Remove the calibrator cable and connect Signal Generator AN/URM–49 to the ANTENNA jack. Replace the dummy filter with the filter to be tested, tuned approximately as indicated in the *Dial calibration* column of the chart.

(3) Connect the signal generator to the ANTENNA jack and tune it to the frequency of the receiver indicated for test No. 1 in the *Receiver frequency* column.

(4) Set the signal generator to 100 microvolts and tune the filter for maximum indication on the MEASURE meter with the MEASURE switch set to the SIG LEV position. Set the SQUELCH control for a reading of 20 on the MEASURE meter with the MEASURE switch set to the SIG LEV position. If, after tuning, the test filter dial does not agree with the frequency noted in the *Dial calibration* column, refer to *c* below.

(5) Replace the test filter with the dummy filter and reset the output level of the signal generator to obtain the same reading on the MEASURE meter as noted in (4) above. The output level should be not less than 85 microvolts (this allows 1.4-db insertion loss).

(6) Remove the dummy filter *without disturbing its setting,* and replace with the test filter.

(7) Remove the signal generator cable from the ANTENNA jack and replace the calibrator cord. Tune the receiver to the calibration frequency shown for test No. 2 in the *Receiver frequency* column, for the particular filter.

(8) Remove the calibrator cord and replace the signal generator cable; repeat step (4), then replace the test filter without disturbing its setting.

(9) Repeat the procedure in (5) above. The output level should conform to the setting indicated for test No. 2 for the particular filter in the last column of the chart.

(10) Repeat the procedure in (6) above.

(11) Repeat the procedure in (7) above, tuning the receiver to the calibrator frequency for test No. 3 in the *Receiver frequency* column.

(12) Remove the calibrator cord; replace the signal generator cable. Repeat the procedure in (4) above; then replace the test filter.

(13) Repeat the procedure in (5) above. The output level should conform to the setting indicated for test No. 3 for the particular filter in the *With dummy filter* column.

c. Adjusting Calibration. If the procedure in *b*(4) above indicates that recalibration is necessary, proceed as follows:

(1) Repeat the procedure in *b*(1) through (4) above.

(2) Loosen the nuts in the center of the dial knobs.

(3) Adjust the center screws successively for a maximum indication on the MEASURE meter with the MEASURE switch in the SIG LEV position.

(4) Hold the center screw, thereby retaining the adjustment obtained and rotate the dials to agree with the tuned frequency given in *b*(1) above.

(5) Tighten the nuts securely, while still retaining the adjustments ((4) above).

Band-pass filter	Test No.	Dial calibration (mc)	Receiver frequency (calibration marks)	Signal generator output level (microvolts)	
				With dummy filter	With band-pass filter
F-233/U_	1	451 ±3	451 (near channel 101)	Not less than 85	100
	2	451 ±3	429 (near channel 86)	100	4,500 max, 2,000 min.
	3	451 ±3	473 (near channel 116)	100	5,600 max, 2,500 min.
F-234/U_	1	495 ±3	495 (near channel 130)	Not less than 85	100
	2	495 ±3	473 (near channel 116)	100	4,500 max, 2,200 min.
	3	495 ±3	517 (near channel 145)	100	5,700 max, 2,400 min.
F-235/U_	1	539 ±3	539 (near channel 160)	Not less than 85	100
	2	539 ±3	517 (near channel 145)	100	4,000 max, 1,800 min.
	3	539 ±3	550 (near channel 167)	100	4,000 max, 1,800 min.
F-236/U_	1	550 ±3	550 (near channel 167)	Not less than 85	100
	2	550 ±3	528 (near channel 152)	100	5,600 max, 2,200 min.
	3	550 ±3	572 (near channel 182)	100	6,000 max, 2,400 min.

Page 433. Add paragraph 360.1 after paragraph 360:

360.1. Final Test of Receiver A-Band Tuner

a. General. This final test is performed either to determine the quality of a repaired receiver A-band tuner or as a part of the overall final test of the receiver.

b. Pretest Procedure.

(1) Remove the tuner that is in the receiver.

(2) Connect Cable Assembly CX-2406/U between connector P5 of the A-band tuner and connector J108 of the receiver (fig. 277.1).

(3) Connect cable assembly CG-1091/U between connector P1 of the A-band tuner and connector J106 of the receiver (fig. 277.1).

(4) Connect cable assembly CG-1103/U between connector P4 of the A-band tuner and connector J107 of the receiver (fig. 277.1).

(5) Set the AFC control of the tuner to zero (fig. 93.1).

(6) Set the AFC-OFF-CAL switch of the receiver to OFF (fig. 93).

(7) Connect Signal Generator AN/URM-70 to the ANTENNA jack of the receiver.

(8) Set the MEASURE switch to the SIG LEV position (fig. 93).

c. Checking Dial Position.

(1) Turn the RF AMP control to the extreme clockwise position.

(2) Adjust the INDEX control until the movable index line is directly over the white index line on the panel. Point U should be under the hairline.

(3) If point U is not directly under the hairline, loosen the set screws on the dial, set point U under the hairline, and tighten the set screws.

d. Checking Tuning Range.

(1) Turn the POWER switch of the receiver to ON.

(2) Adjust the AN/URM-70 frequency to 50.125 mc and its output to 100 microvolts.

(3) Check to see if it is possible to adjust the RF AMP control at channel 1 to produce a simultaneous maximum reading on the MEASURE meter and a zero reading on the FREQ DRIFT meter.

(4) Adjust the AN/URM-70 frequency to 99.875 mc.

(5) Check to see if it is possible to adjust the RF AMP control near channel 200 to produce a simultaneous maximum reading on the MEASURE meter and a zero reading on the FREQ DRIFT meter.

(6) Turn the RF AMP control slightly clockwise from its setting in (5) above and note the FREQ DRIFT meter. The meter needle should deflect to the right.

(7) Turn the RF AMP control slightly counterclockwise. The FREQ DRIFT meter needle should deflect to the left.

e. Checking Tracking.

(1) Disconnect the AN/URM–70 from the ANTENNA jack. Connect cable assembly CG–1031/U between the CAL OUT and ANTENNA jacks.

(2) Hold the AFC-OFF-CAL switch in the CAL position and adjust the RF AMP control to the first red calibration mark near the low end of the band to produce a simultaneous maximum reading on the MEASURE meter and a zero reading on the FREQ DRIFT meter.

(3) With the RF AMP control set as in (2) above, check to see if it is possible to adjust the INDEX control to get the index line directly over the red calibration mark.

(4) Hold the AFC-OFF-CAL switch in the CAL position and adjust the RF AMP control near channel 200 to produce a simultaneous maximum reading on the MEASURE meter and a zero reading on the FREQ DRIFT meter.

(5) With the RF AMP dial set as in (4) above, check to see if it is possible to adjust the INDEX control to get the index line directly over the red calibration mark.

(6) Hold the AFC-OFF-CAL switch in the CAL position and adjust the RF AMP control near channel 109 to produce a simultaneous maximum reading on the MEASURE meter and a zero reading on the FREQ DRIFT meter.

(7) Release the AFC-OFF-CAL switch. With the RF AMP dial set as in (6) above, see whether it is possible to adjust the INDEX control to get the index line directly over the red calibration mark.

(8) Disconnect the cable from the ANTENNA and CAL OUT jacks. Connect Signal Generator AN/URM–70 to the ANTENNA jack.

(9) Using the AN/URM–81, adjust the AN/URM–70 frequency to 72.375 mc and its output to 100 microvolts.

(10) With the INDEX line set as in (7) above, adjust the RF AMP control to produce a simultaneous maximum reading on the MEASURE meter and a zero reading on the FREQ DRIFT meter. The RF AMP dial should read channel 90 ±1 channel.

(11) If the conditions specified in (3), (5), (7), and (10) above are met, the tracking is satisfactory. If all the conditions are not met, perform the procedure outlined in *f* below.

f. Adjusting Tracking of Local Oscillator.

(1) If any adjustable parts of the receiver A-band tuner have been replaced, set each replacement part to the middle of its range.

(2) Disconnect the AN/URM–70 from the ANTENNA jack. Connect Cable Assembly CG–1031/U between the ANTENNA and CAL OUT jacks.

(3) Check to see that the AFC control is set to zero and the MEASURE switch is set to the SIG LEV position.

(4) To check to see that the local-oscillator tracking is properly adjusted, hold the AFC-OFF-CAL switch in the CAL position and turn the RF AMP control to each red calibration mark. At each setting of the RF AMP control, the FREQ DRIFT meter should read 0 ±25 ua. If it does not, perform the procedures in (5) through (13) below.

(5) Remove the cover from the tuner.

(6) Adjust the INDEX control so that the movable index line is directly over the white line on the panel.

(7) Set the RF AMP control so that the red calibration mark near channel 153 is directly below the index line.

(8) Hold the AFC-OFF-CAL switch to the CAL position and adjust capacitor C34 (fig. 246) for a zero reading on the FREQ DRIFT meter. Note that the meter reads either side of zero as the capacitor is adjusted.

(9) Hold the AFC-OFF-CAL switch to the CAL position and adjust inductor L6 (fig. 245) for a maximum indication on the MEASURE meter.

(10) Set the RF AMP control so that the red calibration mark near channel 197 is directly below the index line.

(11) Hold the AFC-OFF-CAL switch in the CAL position and adjust inductor L14 for a zero reading on the FREQ DRIFT meter.

(12) Set the RF AMP control so that the red calibration mark near channel 20 is directly below the index line.

(13) Hold the AFC-OFF-CAL switch in the CAL position and adjust inductor L15 for a zero reading on the FREQ DRIFT meter. This completes the tracking adjustment of the local oscillator.

(14) Repeat the procedure outlined in (4) above.

g. Adjusting Tracking of Rf Amplifier.

(1) Disconnect the cable from the ANTENNA and CAL OUT jacks. Check to see that the AFC-OFF-CAL switch is at OFF and the MEASURE switch is at SIG LEV.

(2) Connect a coaxial T-connector to the ANTENNA jack. Connect Signal Generator SG–92/U at one end and Signal Generator TS–497/URR at the other end of the T-connector.

(3) Connect the vertical amplifier input of Oscilloscope OS–8A/U to the junction of capacitor C14 and resistors R5 and R6, using a shielded lead in series with an isolating resistor (10,000 to 50,000 ohms, ½ watt).

(4) Connect the sweep output of the SG–92/U to the horizontal amplifier of the oscilloscope.

(5) Set the sweep rate of the SG–92/U to 60 cps, and its sweep width to 25 mc.

(6) To see that the rf amplifier tracking is properly adjusted, turn the RF AMP control until each channel listed in the chart below is directly under the index line. At each setting of the RF AMP control, adjust the frequency of the TS–497/URR for a zero reading on the FREQ DRIFT meter and a simultaneous maximum reading on the MEASURE meter. The output of the TS–497/URR will produce a marker pip on the oscilloscope. The marker pip represents the center of the if band. The height of the marker pip can be varied by adjusting the output voltage of the TS–497/URR. Adjust the SG–92/U frequency until a response curve is seen on the oscilloscope. At each channel setting, the response curve should be smooth, symmetrical, and single-peaked, and the marker pip should be between the two 3-db points on the response curve. If the response meets these requirements at each of the channels, the rf amplifier is tracking properly. If not, perform the procedures outlined in (7) through (11) below.

Rf channel	Approximate frequency of TS–497/URR and SG–92/U (mc)	Rf channel	Approximate frequency of TS–497/URR and SG–92/U (mc)
1	50.125	125	81.125
42	60.375	167	91.625
83	70.625	200	99.875

(7) Adjust the INDEX control so that the movable index line is directly over the white line on the panel.

(8) Set the RF AMP control to channel 10 on the dial. Adjust the TS–497/URR frequency for a zero reading on the FREQ DRIFT meter and a simultaneous maximum reading on the MEASURE meter. Adjust the SG–92/U frequency to 52.375 mc. The frequency response curve on the oscilloscope should be smooth, single-peaked, and symmetrically centered about the marker pip. If it is not, adjust capacitors C7 and C11 until the desired response curve is obtained.

(9) Set the RF AMP control to channel 200 on the dial. Adjust the TS–497/URR frequency for a zero reading on the FREQ DRIFT meter and a simul-

taneous maximum reading on the MEASURE meter. Adjust the SG–92/U frequency to 99.875 mc. The frequency response curve on the oscilloscope should be smooth, single-peaked, and symmetrically centered about the marker pip.

(10) Repeat the procedures outlined in (8) and (9) above until the desired response curve is obtained at both ends without the need for adjustment.

(11) Repeat the procedures outlined in (6) above.

h. Checking Bandwidth of Rf Amplifier.

(1) Check to see that the test setup is the same as that used in *g* above.

(2) Set the RF AMP control to channel 125 on the dial.

(3) Adjust the SG–92/U frequency to 81.125 mc.

(4) Adjust the TS–497/URR frequency so that the marker pip is positioned at the point on the left side of the response curve having half the peak amplitude. Note the TS–497/URR frequency.

(5) Adjust the TS–497/URR frequency so that the marker pip is positioned at the half-amplitude point on the right side of the response curve. The difference between the TS–497/URR frequency now and that noted in (4) above should be between 2 and 8 mc.

i. Checking Tuner Gain.

(1) Disconnect the TS–497/URR, the SG–92/U, and the T-connector from the ANTENNA jack of the receiver.

(2) Connect the TS–497/URR to the ANTENNA jack of the receiver through a 6-db, 50- to 50-ohm matching pad.

(3) Adjust the RF AMP control to channel 10.

(4) Adjust the TS–497/URR frequency for a maximum reading on the MEASURE meter in the SIG LEV position. Record the MEASURE meter reading and the output voltage of the TS–497/URR. Do not change the setting of the SQUELCH control.

(5) Disconnect Cable Assembly CG–1103/U from connector J107 of the receiver. Disconnect the TS–497/URR from the ANTENNA jack and connect it through a 6-db matching pad (used to match the 50-ohm output impedance of the TS–497/URR to the 75-ohm input impedance of the if amplifier) to connector J107.

(6) Adjust the TS–497/URR frequency to 30.0 mc. Adjust its output voltage to obtain the same reading on the measure meter as that noted in (4) above. If the tuner gain is normal, the TS–497/URR output voltage now should be at least 8 times greater than that recorded in (4) above (+18-db gain).

(7) Adjust the RF AMP control to channel 200.

(8) Reconnect the TS–497/URR to the ANTENNA jack of the receiver through the 6-db, 50- to 50-ohm matching pad. Connect Cable Assembly CG–1103/U to connector J107 of the receiver.

(9) Adjust the TS–497/URR frequency for a maximum reading on the MEASURE meter. Adjust its output voltage to obtain the same reading on the MEASURE meter as that noted in (4) above. If the tuner gain is normal, the TS–497/URR output voltage now should be not more than 8 times the output voltage obtained in (6) above (at least 18-db gain).

(10) If the gain, as determined in (6) or (9) above, is low and the tracking is correct, check the tuner tubes and replace if faulty; then repeat (3) through (9) above to see if the gain is normal.

j. Checking Image and Spurious Response.

(1) Disconnect output plug P108 of the if amplifier from input jack J116 of the limiters. Connect plug P108 to one of the inputs of Panoramic Indicator IP–173/U.

(2) Connect Signal Generator TS–497/URR to the other input of the IP–173/U.

(3) Adjust the AN/URM–70 (connected to the ANTENNA jack of the receiver) to a frequency of 81.125 mc.

(4) Adjust the RF AMP control for a maximum indication on the MEASURE meter. Disregard the FREQ DRIFT meter.

(5) Adjust the TS–497/URR frequency near 40 mc and adjust the gain of the IP–173/U to obtain a centered pip with a +20-db amplitude on the IP–173/U. This pip represents the desired frequency. Note the output level on the AN/URM–70.

(6) Adjust the AN/URM–70 frequency to 141.125 mc. This is the image frequency at the setting of the RF AMP control obtained in (4) above. *Do not change the RF AMP control setting or the adjustments of the TS–497/URR and IP–173/U.*

(7) Increase the AN/URM–70 output by 20 db (a voltage increase of 10 times). If a pip is seen on the IP–173/U, it should not exceed —10 db. This would represent an image suppression of at least 50 db.

(8) Vary the AN/URM–70 frequency from 49 mc to 101 mc and observe the IP–173/U. No pips greater than —10 db should be seen except at 81.125 mc (the frequency to which the tuner is adjusted) and at 141.125 mc (the image frequency). The absence of pips greater than —15 db at all other frequencies indicates a spurious response rejection of at least 55 db.

k. Checking Local-Oscillator Radiation.

(1) Disconnect plug P108 from the IP–173/U, and reconnect the plug to jack J116.

(2) Disconnect the AN/URM–70 from the ANTENNA jack and reconnect it to the IP–173/U.

(3) Adjust the AN/URM–70 frequency to 111.125 mc. This is the frequency of the local oscillator when the receiver is tuned as in *j*(4) above. Adjust the AN/URM–70 output to 8,000 microvolts.

(4) Adjust the TS–497/URR frequency and the IP–173/U gain to obtain a centered pip of 0 db on the IP–173/U.

(5) Disconnect the AN/URM–70 from the IP–173/U. Connect the input of the IP–173/U to the ANTENNA jack of the receiver. If a pip is seen on the IP–173/U, it should not exceed 0 db. This would represent local-oscillator radiation not exceeding 8,000 microvolts.

l. Final Procedure.

(1) Turn the POWER switch to OFF.

(2) Disconnect all test equipment and maintenance cables.

(3) Reconnect the A-band tuner in the receiver.

Page 442. Add paragraph 362.1 after paragraph 362:

362.1. Final Test of Receiver D-Band Tuner

a. General. This final test is performed either to determine the fitness and quality of a repaired receiver D-band tuner or as part of the overall final test of the receiver.

b. Pretest Procedure.

(1) Remove the tuner that is in the receiver.

(2) Connect Cable Assembly CX–2406/U between P5 of the D-band tuner and connector J108 of the receiver (fig. 279.1).

(3) Connect Cable Assembly CG–1091/U between connector P1 of the tuner and connector J106 of the receiver (fig. 279.1).

(4) Connect Cable Assembly CG–1103/U between connector P4 of the tuner and connector J107 of the receiver (fig. 279.1).

(5) Set the AFC control of the tuner to zero (fig. 95.1).

(6) Set the AFC switch of the receiver to OFF (fig. 93).

(7) Connect Signal Generator AN/URM–49 to the ANTENNA jack of the receiver.

(8) Set the MEASURE switch of the receiver to the SIG LEV position.

c. Checking Dial Alinement.

(1) Check to see that the OSC dial is correctly assembled to the tuner assembly

by turning the dial to the counterclockwise stop. The dial index, when centered over the white mark on the front panel, should be within $\pm 1/16$ inch of the center of the *U* mark.

Note. If the conditions given in (1) above are not met, loosen the two set screws on the coupling behind the vernier drive and move the dial so that the *U* mark corresponds with the index line.

(2) The FINE TUNE knob should be within $\pm$ 1/16 inch of the horizontal line when turned fully counterclockwise.

(3) Check to see that, with the AFC control set at +5, the AFC capacitor is set for maximum capacity.

(4) Turn the RF AMP control to the counterclockwise mechanical stop. The dial window index should be within $\pm 1/8$ inch of the stop line.

Note. If the conditions given in (4) are not met, loosen the set screws in the gear-driven tape drum. Using a screwdriver rotate the slotted shaft until the dial tape stop line corresponds with the index line on the front panel.

Caution: **Hold the screwdriver firmly in the slotted shaft while the set screws are loose. Sudden unwinding of the storage drum will cause serious damage to the spring and tape.**

d. Adjusting Tracking of Local Oscillator.

(1) Repeat the procedure in *b* above.

(2) Turn the stop adjustment screw of inductor L11 (large screw head on oscillator and mixer assembly) completely clockwise.

(3) Adjust L13 until the screw projects 1/2 inch above the chassis.

(4) Adjust C21 so that the screw projects 9/16 inch above the chassis.

(5) Set the AFC knob to zero.

(6) Set the AN/URM–49 frequency to 615 mc, and adjust the output to 2,000 microvolts.

(7) Set the RF AMP and OSC controls to channel 210.

(8) Set the MEASURE meter switch in the SIG LEV position and turn the OSC knob clockwise until a signal is indicated on the MEASURE meter.

(9) Tune the OSC for zero crossover on the FREQ DRIFT meter.

(10) Adjust L12 for a maximum SIG LEV indication.

(11) Reset the stop adjustment of L11 so that at the maximum clockwise position of the OSC knob, the input frequency is 615 mc $\pm$20 microamperes deflection on the FREQ DRIFT meter.

(12) Center the INDEX dial on the white line and adjust the OSC dial on its shaft until the *U* mark is centered about the index line.

(13) With the OSC knob turned against the clockwise stop, note that the 615-mc input signal from the signal generator still produces a reading on the MEASURE meter, with the MEASURE meter switch in the SIG LEV position, and on the FREQ DRIFT meter; adjust C21 for the zero crossover point at this position.

(14) Set the RF AMP and OSC dials to channel 70 and set the frequency of the signal generator to 404.250 mc.

(15) Adjust L13 (low-frequency trimmer) for an indication on the SIG LEV meter and a zero reading on the FREQ DRIFT meter.

(16) Set the RF AMP and OSC dials to channel 200 and adjust the frequency of the signal generator to 599.250 mc.

(17) Adjust C21 (high-frequency trimmer) for an indication on the SIG LEV meter and a zero crossover point on the FREQ DRIFT meter.

(18) Repeat the procedures outlined in (14) through (17) above until the FREQ DRIFT meter error (when performing the operations of (14) and (16) above) is less than 5 microamperes without further adjustment of L13 or C21.

(19) Disconnect the signal generator from the ANTENNA jack.

(20) Connect Cable Assembly CG–1031/U between the CAL OUT and ANTENNA jacks.

(21) Tune the RF AMP and OSC dials for a maximum SIG LEV meter reading and for a zero crossover point near the red calibrator mark between channels 130 and 131.

(22) Adjust the dial index so that the line centers over the red calibration mark between channels 130 and 131.

(23) Leave the dial index in this position, and tune successively for zero crossover of the FREQ DRIFT meter at other calibrator outputs within the band. If the crossovers fall within two channels of the red calibration marks, a satisfactory oscillator alinement to the dial is indicated. If the calibrator marks do not fall within this range, adjust the dial index at each calibration mark and determine the error in channels between crossover and each adjacent calibration mark. Determine the area of the dial where there is the greatest error and slightly readjust the appropriate trimmer (L13, if near the low channels; C21 if near the high channels).

e. Adjusting Tracking of Rf Amplifiers. Aline the rf amplifier after the oscillator has been satisfactorily tracked to the dial.

(1) Repeat the procedures of *b* above.

(2) Set the RF AMP and OSC dials to channel 70 and adjust the signal generator output to 2,000 microvolts.

(3) Adjust the frequency of the signal generator for simultaneous readings of zero on the FREQ DRIFT meter and a maximum on the MEASURE meter with MEASURE meter switch in the SIG LEV position.

(4) Set the FINE TUNE knob three divisions from the counterclockwise stop.

(5) Adjust capacitor C4 in the bottom cavity for a maximum indication on the SIG LEV meter, reducing the signal generator output as needed to maintain a usable indication.

(6) Adjust the RF AMP control on the front panel for a new maximum; readjust capacitor C4 for maximum.

(7) Continue alternate adjusting of C4 and the RF AMP control on the front panel until the highest reading on the SIG LEV meter is reached.

(8) Set the RF AMP and OSC dials to channel 200 and adjust the output of the signal generator to 2,000 microvolts.

(9) Repeat the procedure given in (3) above.

(10) Adjust the FINE TUNE and RF AMP controls for maximum indication on the SIG LEV meter, reducing the signal generator output as necessary to maintain a usable indication.

Note. The FINE TUNE knob may be close to the clockwise stop. If maximum reading on the SIG LEV meter is obtained with this control at the clockwise stop, it will be necessary to repeat the operation given in (2) through (7) above, setting the FINE TUNE knob a little more in the counterclockwise direction than before. Repeat the procedures given in (8) through (10) above, observing that the FINE TUNE knob is not at the absolute end of its range, although it may be near it.

(11) Be sure that both dials are adjusted for maximum on the SIG LEV meter.

(12) Loosen the set screws on the bottom tape drum on the RF AMP dial and set the tape so that it reads channel 200 at the setting. Refer to paragraph 341.1*h* for tape adjustments.

f. Checking Tuning Range.

(1) Repeat the procedure given in *b* above.

(2) Adjust the frequency of the signal generator to 400 mc and its output to 100 microvolts.

(3) Adjust the RF AMP control to channel 67.

(4) Check to see if it is possible to adjust the OSC controls to produce a zero reading on the FREQ DRIFT meter at or very near the same setting that produces a maximum reading on the MEASURE meter.

(5) Adjust the frequency of the signal generator to 600 mc.

(6) Adjust the RF AMP control to channel 200.

(7) Repeat the procedure given in (4) above.

(8) Turn the AFC control clockwise to +5.

(9) Set the RF AMP control to channel 133.

(10) Readjust the frequency of the signal

generator until the FREQ DRIFT meter passes through a zero reading. Note the signal generator reading.

(11) Turn the AFC control counterclockwise to —5.

(12) Repeat the procedure given in (10) above.

(13) Note the difference in the signal generator readings; the difference should be 1.6 to 9 mc.

(14) Reset the AFC control to zero.

g. Checking Tuner Bandwidth. The procedure for checking tuner bandwidth can be made with the D-band receiver tuner plugged into the receiver. If it is necessary to remove the tuner that is in the receiver while checking tuner bandwidth, repeat the procedure outlined in *b* above.

(1) Connect Signal Generator AN/URM–49 to the ANTENNA jack of the receiver.

(2) Turn the POWER switch of the receiver to ON.

(3) Adjust the RF AMP and OSC dials of the tuner to channel 70.

(4) Adjust the frequency of the signal generator (approximately 403 mc) for zero crossover of the FREQ DRIFT meter on the receiver.

(5) Set the MEASURE meter switch to the SIG LEV position and tune the RF AMP and FINE TUNE controls for maximum deflection on the MEASURE meter.

(6) Set the MEASURE meter switch to the 2ND LIM position.

(7) Adjust the signal generator rf output until the MEASURE meter reads approximately 20 microamperes.

(8) Increase the signal generator output by 3 db.

(9) Slowly tune the signal generator to higher frequencies and at the same time tune the OSC dial to higher frequencies, thereby keeping the FREQ DRIFT meter at zero. Continue this process until the MEASURE meter reads the value obtained in the procedure in (7) above.

(10) Repeat the procedure in (9) above for the lower frequencies.

(11) The difference between the frequency given in (9) above and that in (10) above is the bandwidth at the 3-db down points.

(12) The bandwidth at the test frequency should be more than 1.25 mc and less than 9 mc.

h. Checking Tuner Gain. The procedure for checking tuner gain can be made with the D-band receiver tuner plugged into the receiver. If it is necessary to remove the tuner that is in the receiver while checking tuner gain, repeat the procedure outlined in *b* above.

(1) With the D-band receiver tuner plugged into the receiver, connect the AN/URM–49 to the ANTENNA jack of the receiver through a 6-db, 50-ohm attenuator pad.

(2) Adjust the RF AMP and OSC controls to channel 70.

(3) Set the MEASURE meter switch to the SIG LEV position; adjust the signal generator frequency for a zero reading on the FREQ DRIFT meter and a positive indication on the MEASURE meter.

(4) Adjust the RF AMP control for a maximum indication on the MEASURE meter. Adjust the OUTPUT ATTENUATOR of the signal generator for a reading of 25 microamperes on the MEASURE meter. Record the OUTPUT ATTENUATOR (microvolt scale) reading on the signal generator.

(5) Turn the POWER switch of the receiver to OFF.

(6) Repeat the procedures given in *b*(1) through (3), (5), (6), and (8) above.

(7) Connect Signal Generator TS–497/URR to J107 of the receiver through a 6-db, 72-ohm matching pad (used to match the 50-ohm output impedance of the signal generator to the 75-ohm input impedance of the if amplifier).

(8) Turn the POWER switch of the receiver to ON.

(9) Set the signal generator frequency to 30 mc, as indicated by zero crossover on the FREQ DRIFT meter, and adjust its output voltage to obtain a MEAS-

URE meter indication of 25 microamperes. Record the OUTPUT ATTENUATOR (microvolt scale) reading of the signal generator. The ration obtained in OUTPUT ATTENUATOR (microvolt scale) readings between those given in (4) and (9) above is the D-band tuner gain.

(10) Repeat the procedure given in (1) through (9) above for channels 130 and 190.

Note. The gain must be at least 3.4 times (10 db) at each test frequency.

(11) Turn the POWER switch of the receiver to OFF.

(12) Disconnect all test equipment and maintenance cables.

(13) Return the tuner to the receiver.

i. Checking Local-Oscillator Radiation. Two Radio Receivers R–147/TRC are required for checking oscillator radiation, each receiver requiring a D-band tuner.

(1) Connect the ANTENNA jack of the receiver containing the tuner under test (test receiver) to the ANTENNA jack of the receiver being used for reference (measuring receiver).

(2) Set the test receiver to channel 100 and the measuring receiver for zero crossover on the FREQ DRIFT meter at channel 80 (the frequency of the local oscillator of the test receiver).

(3) Set the MEASURE switch in the SIG LEV position (measuring receiver).

(4) Note the reading of the MEASURE meter.

(5) Disconnect the two ANTENNA jacks.

(6) Connect Signal Generator AN/URM–49 to the ANTENNA jack of the measuring receiver.

(7) Adjust the signal generator for zero crossover on the FREQ DRIFT meter of the measuring receiver (420 mc).

(8) Adjust the output of the signal generator to obtain the same MEASURE meter reading as that obtained in (4) above.

Note. The output voltage of the signal generator should be less than 8,000 microvolts.

(9) Set the test receiver to channel 200 and repeat the procedure given in (1) above.

(10) Set the measuring receiver to channel 180 and repeat the procedure in (4) through (8) above.

j. Checking Image and Spurious Response. The procedure for checking tuner image and spurious response can be made with the D-band receiver tuner plugged into the receiver. If it is necessary to remove the tuner that is in the receiver while checking the tuner, repeat the procedure in *b* above.

(1) Connect Signal Generator AN/URM–49 (using a 6-db, 50-ohm attenuator pad and not more than 24 inches of 50-ohm coaxial cable) to the ANTENNA jack of the receiver.

(2) Set the RF AMP and OSC dials of the tuner to channel 70 and adjust the frequency of the signal generator (404 mc) for zero crossover on the receiver FREQ DRIFT meter.

(3) Set the MEASURE meter switch in the SIG LEV position.

(4) Adjust the RF AMP and FINE TUNE knobs for a maximum indication on the MEASURE meter.

(5) Adjust the output of the signal generator to obtain a reading of 20 microamperes on the receiver MEASURE meter. Note the OUTPUT ATTENUATOR reading on the signal generator (-DBM scale).

(6) Set the signal generator frequency to the image frequency (344 mc) and adjust the output until the receiver FREQ DRIFT meter reads zero.

(7) Repeat the procedure given in (5) above. The difference (in db) in rf input signal levels for a constant signal level output (20 microamperes) between the desired frequency and the image frequency is the image rejection ratio. The image response must be at least 40 db down.

(8) Repeat the procedure given in (2) through (7) above for channels 130 and 170.

(9) Set the signal generator frequency to

half the image frequency and adjust the output until the receiver FREQ DRIFT meter reads zero.

(10) Repeat the procedure given in (5) above. The difference (in db) in rf input signal levels for a constant signal level output (20 microamperes) between the desired frequency and the half-image frequency is the half-image rejection ratio. The half-image response shall be at least 50 db down.

(11) Repeat the procedure given in (9) and (10) above for channels 130 and 190.

(12) Set the signal generator frequency to the half-difference frequency (389 mc) and adjust the frequency for zero crossover on the FREQ DRIFT meter.

(13) Repeat the procedure given in (5) above. The difference (in db) in rf input signal levels for a constant signal level output (20 microamperes) between the desired frequency and the half-difference frequency is the half-difference frequency rejection ratio. The response shall be at least 50 db.

(14) Repeat the procedures given in (12) and (13) above for channels 130 and 190.

(15) Repeat the procedure given in (2) and (3) above.

(16) Repeat the procedure given in (5) above, noting the OUTPUT ATTENUATOR reading (in microvolts).

(17) Disconnect the signal generator from the ANTENNA jack.

(18) Connect Signal Generator TS–497/URR (using a 6-db, 50-ohm attenuator pad and not more than 24 inches of 50-ohm coaxial cable) to the ANTENNA jack of the receiver.

(19) With the RF AMP and OSC dials of the tuner set to channel 70, adjust the signal generator frequency to 30 mc.

(20) Adjust the output of the signal generator for a high signal level and a zero reading on the receiver FREQ DRIFT meter.

(21) Adjust the output of the signal generator to obtain a reading of 20 microamperes on the receiver MEASURE meter. Note the output reading of the signal generator (in microvolts). The ratio of the reading obtained in (5) above in microvolts (OUTPUT ATTENUATOR dial) to the reading obtained in this step is the if rejection ratio in db. The if rejection ratio should be 60 db.

(22) Repeat the procedure given in (15) and (21) above for channels 130 and 190.

Rf channel	Signal freq (mc)	Image freq (mc)	½ image freq (mc)	½ diff freq (mc)
70	404	344	172	389
100	449	389	195	434
130	494	434	217	479
160	539	479	239	524
190	584	524	262	569

k. Final Procedure.

(1) Turn the receiver POWER switch to OFF.

(2) Disconnect all test equipment and cabling.

Page 458, figure 268 (contained in separate envelope). Make the following changes:

In the tuner subassembly, delete the existing nomenclature and substitute: RADIO FREQUENCY AMPLIFIER AM–1180/GRC; AMPLIFIER, RADIO FREQUENCY AMPLIFIER AM–912/TRC; RADIO FREQUENCY AMPLIFIER-MULTIPLIER AM–915/TRC; OR RADIO FREQUENCY AMPLIFIER-MULTIPLIER AM–1178/GRC.

At P2, change "NOTE 11" to: **NOTES 11 AND 21.**

In the filter subassembly, add the following to the nomenclature: F–233/U THROUGH F–236/U and F–238/U THROUGH F–243/U.

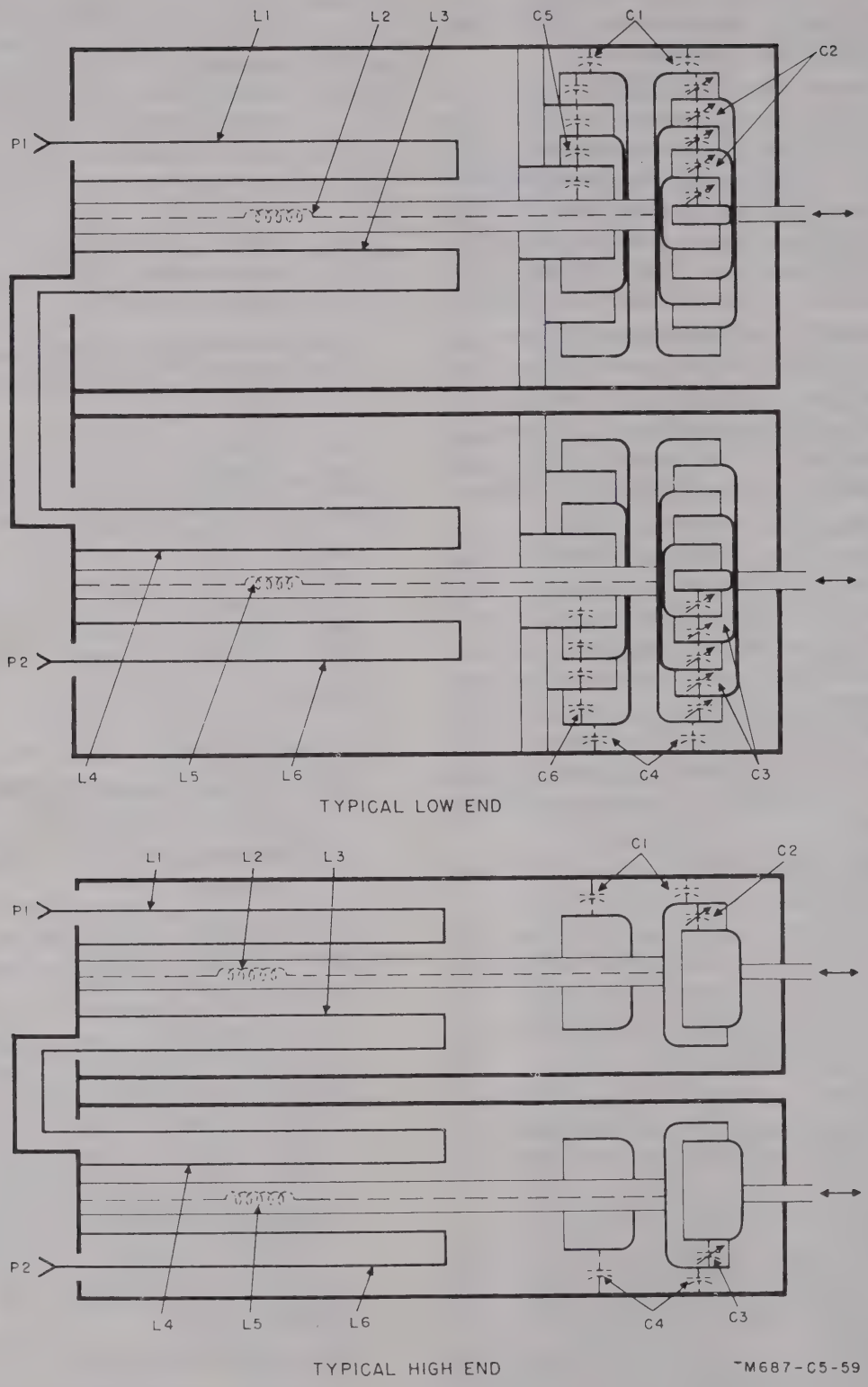

Figure 270.2. (Added) *Band-pass filter, A-band, schematic diagram.*

Figure 271, caption. After *"filter,"* add: *B-, C-, and D-band. Page 462.*

TO CONNECTOR J114 OF
RADIO TRANSMITTER
T-302/TRC

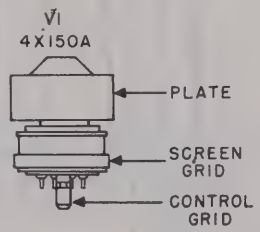

SS OTHERWISE SHOWN:
TORS ARE IN OHMS,
CITORS ARE IN UUF,
CTORS ARE IN UH.

CITOR C16 IS A STRUCTURAL
AND IS NOT OF
CONVENTIONAL TYPE.

ENOTES PANEL MARKING.

P2
PIN SIDE

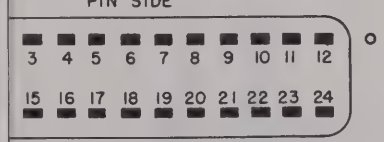

TM687-C5-57

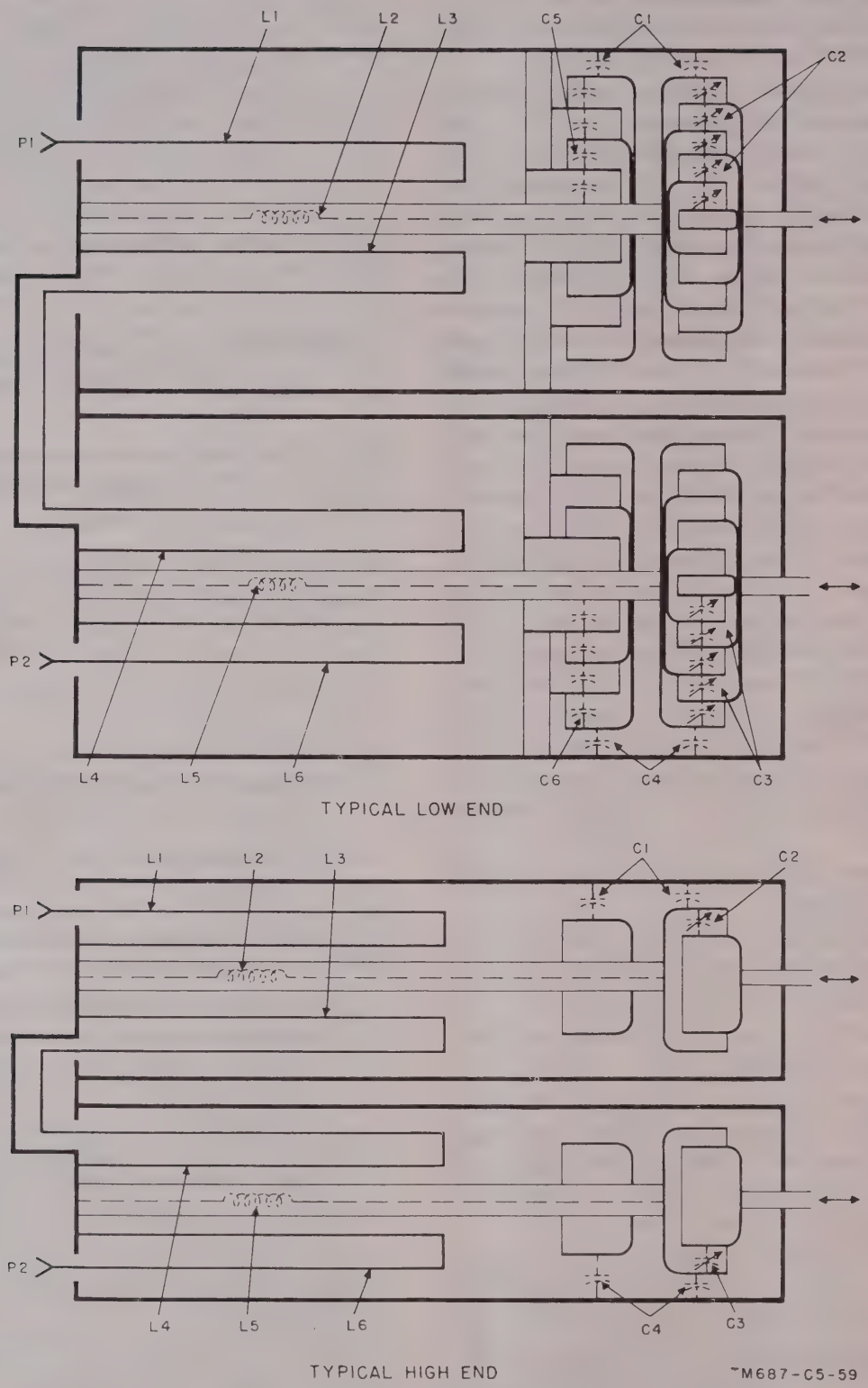

Figure 270.2. (Added) *Band-pass filter, A-band, schematic diagram.*

Figure 271, caption. After *"filter,"* add: *B-, C-, and D-band. Page 462.*

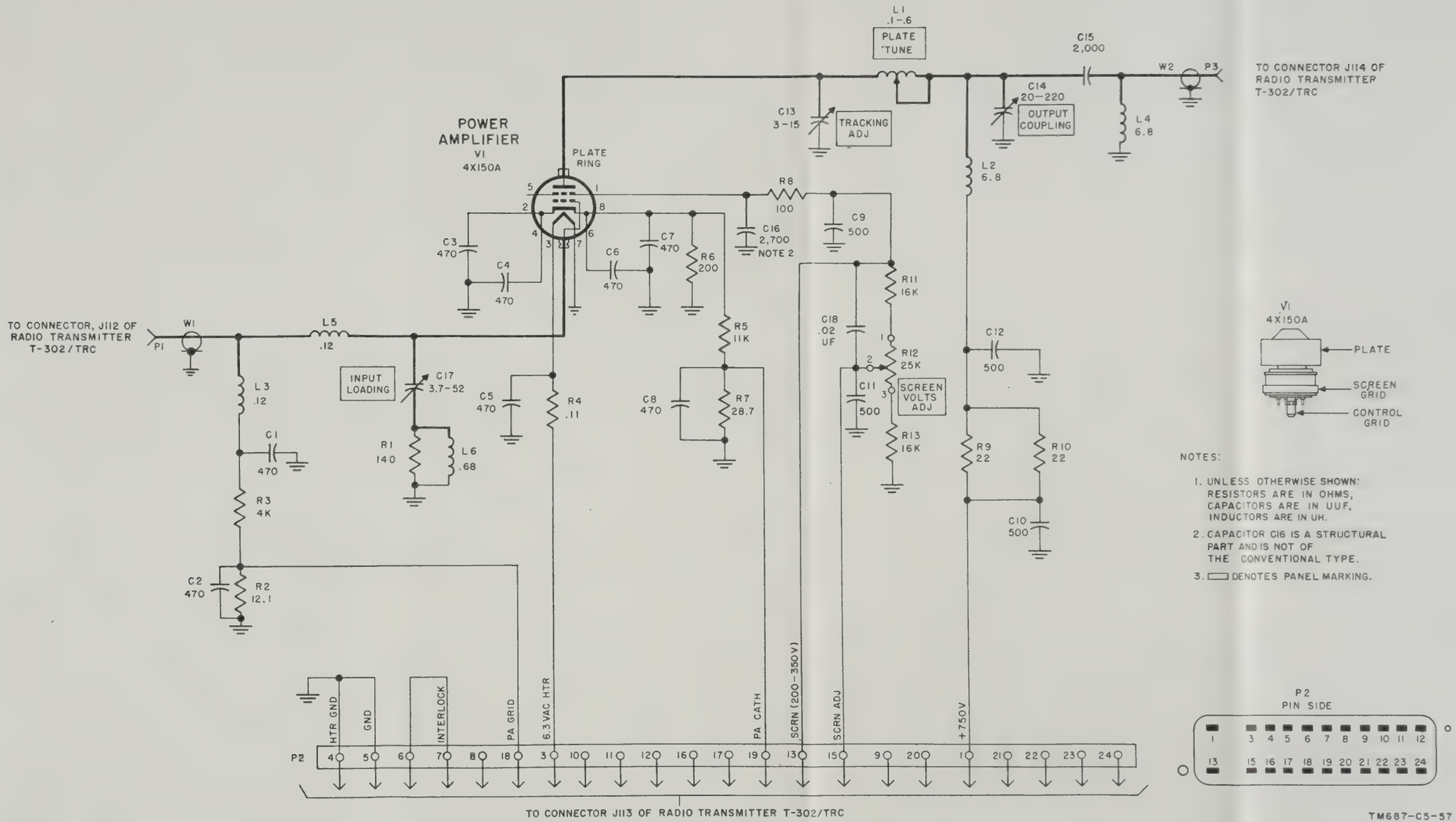

Figure 268.1. (Added) *Radio Frequency Amplifier AM-1180/GRC (transmitter A-band rf tuner), schematic diagram.*

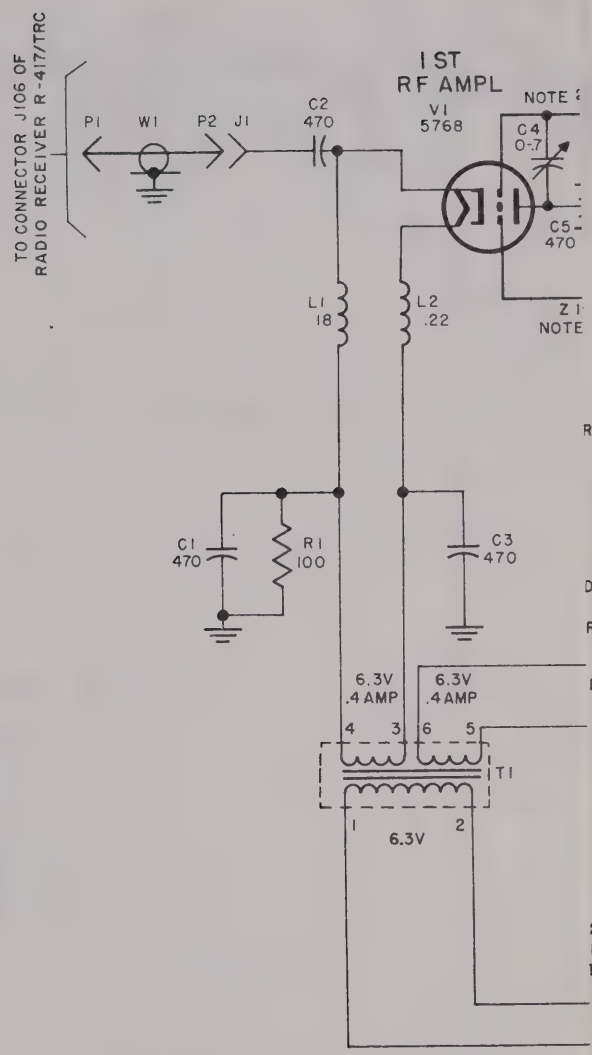
TO CONNECTOR J106 OF
RADIO RECEIVER R-417/TRC
P1
W1
P2
J1
C2
470
1ST
RF AMPL
V1
5768
C4
0-7
C5
470
L1
18
L2
.22
C1
470
R1
100
C3
470
6.3V
.4 AMP
6.3V
.4 AMP
4
3
6
5
T1
1
2
6.3V

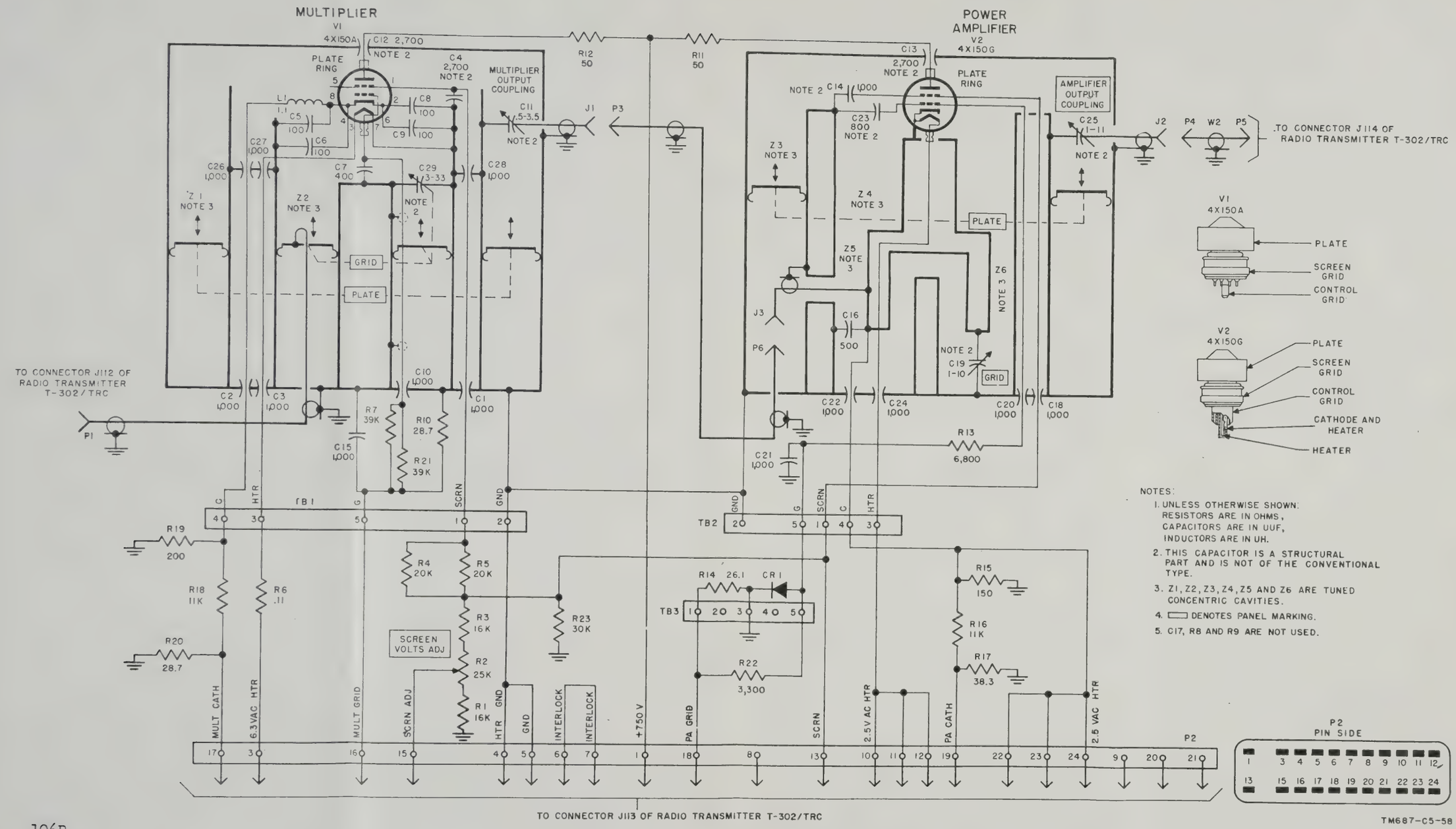

Figure 270.1. (Added) *Radio Frequency Amplifier-Multiplier AM-1178/GRC (transmitter D-band rf tuner), schematic diagram.*

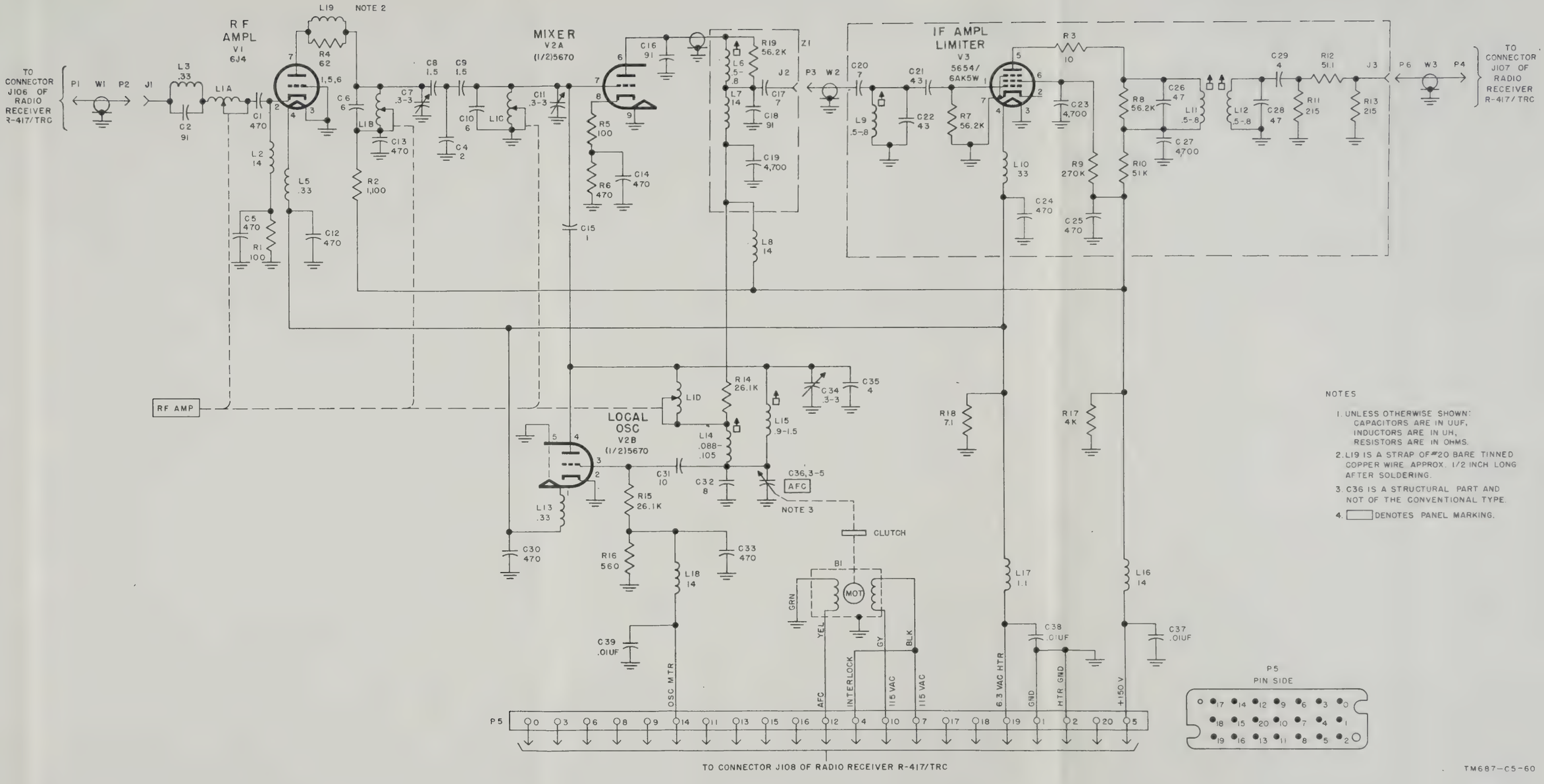

NOTES

1. UNLESS OTHERWISE SHOWN: CAPACITORS ARE IN UUF, INDUCTORS ARE IN UH, RESISTORS ARE IN OHMS.
2. L19 IS A STRAP OF #20 BARE TINNED COPPER WIRE. APPROX. 1/2 INCH LONG AFTER SOLDERING.
3. C36 IS A STRUCTURAL PART AND NOT OF THE CONVENTIONAL TYPE.
4. ▭ DENOTES PANEL MARKING.

TM687-C5-60

Figure 277.1. (Added) *Amplifier-Converter AM-1179/GRC, schematic diagram.*

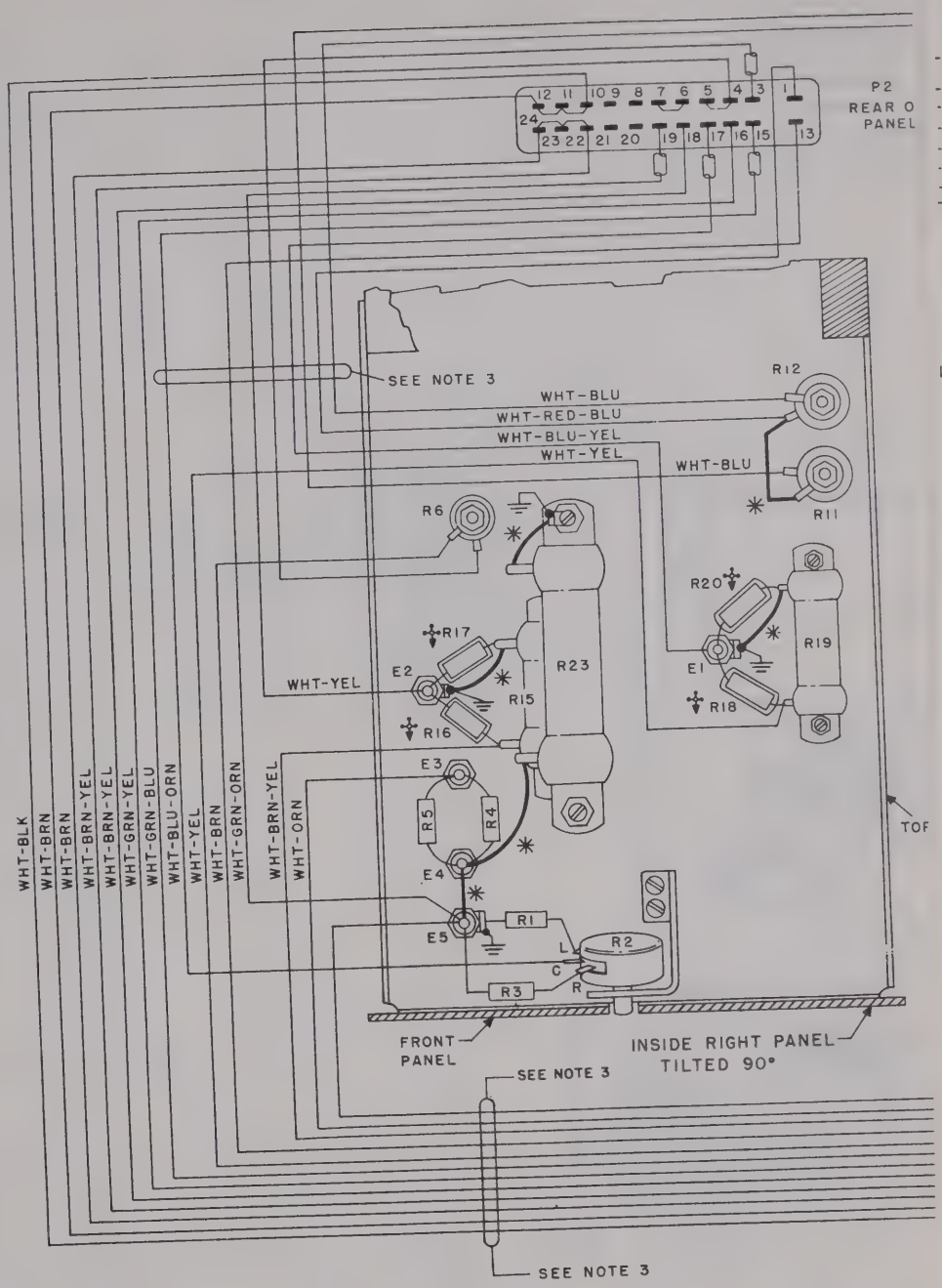

NOTES:

COLOR CODE LEGEND	
BLK - BLACK	ORN - ORANGE
BLU - BLUE	RED - RED
BRN - BROWN	WHT - WHITE
GRN - GREEN	YEL - YELLOW
GY - GRAY	

1. UNLESS OTHERWISE SPECIFIED ALL WIRING IS # 20 AWG.
   ⊣⊢ INDICATES SILVER PLATED METAL PLATE.
   ✣ DESIGNATES THESE COMPONENTS TO BE COVERED WITH VINYL TUBING.
   * DESIGNATES # 16 AWG.
2. BARE WIRING IS RUN AS SHORT AND AS DIRECT AS POSSIBLE.
3. THIS WIRING IS RUN IN LACE FORM.
4. ⊂⊃ DENOTES SLEEVING TO BE SLIPPED OVER LEAD OVER TERMINAL AFTER SO
5. ⊕ THESE CAPACITORS ARE PARTS OF CAVITY AND NO CONVENTIONAL TYPE.

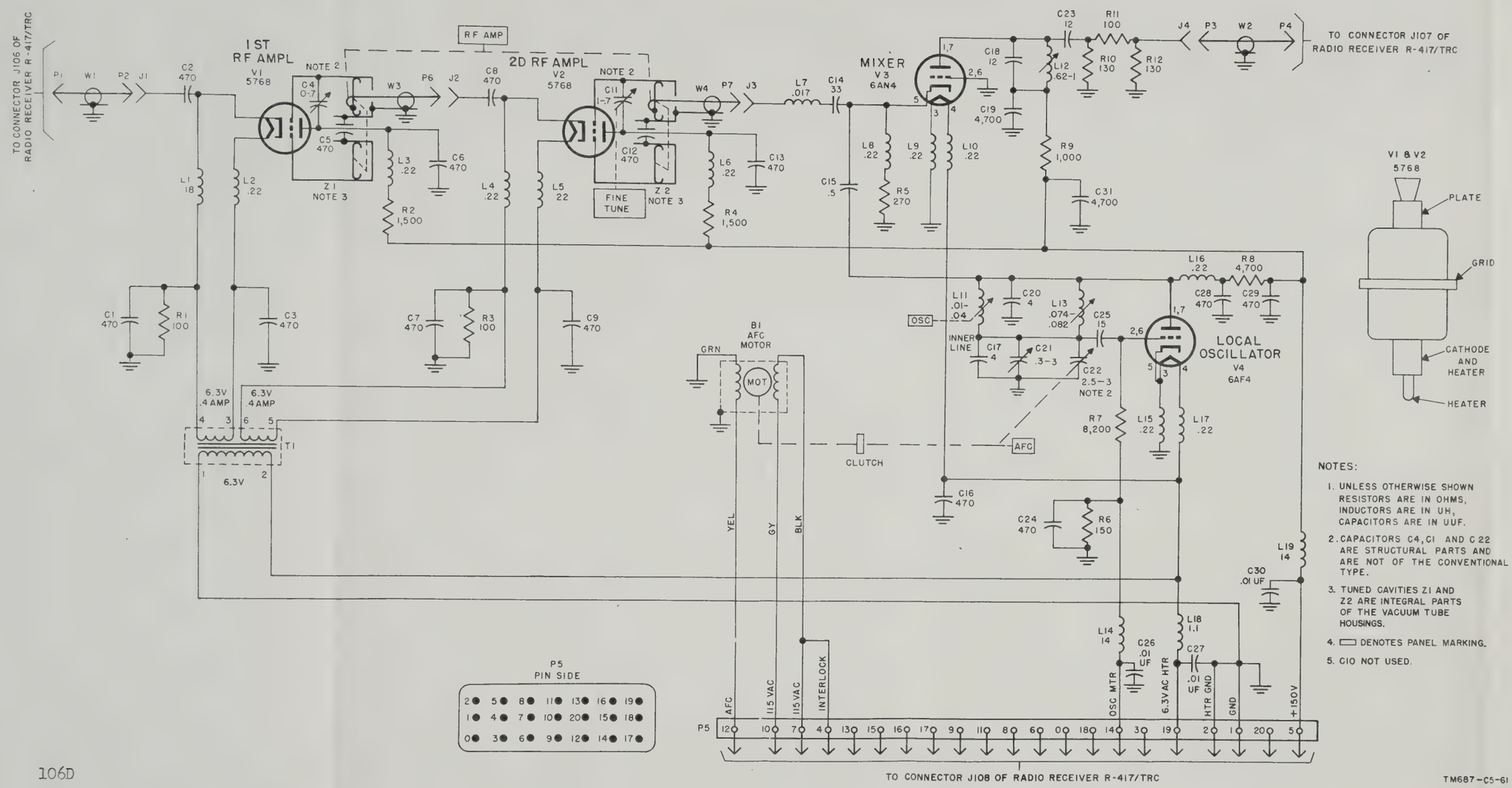

106D

Figure 279.1. (Added) *Amplifier-Converter AM-1177/GRC, schematic diagram.*

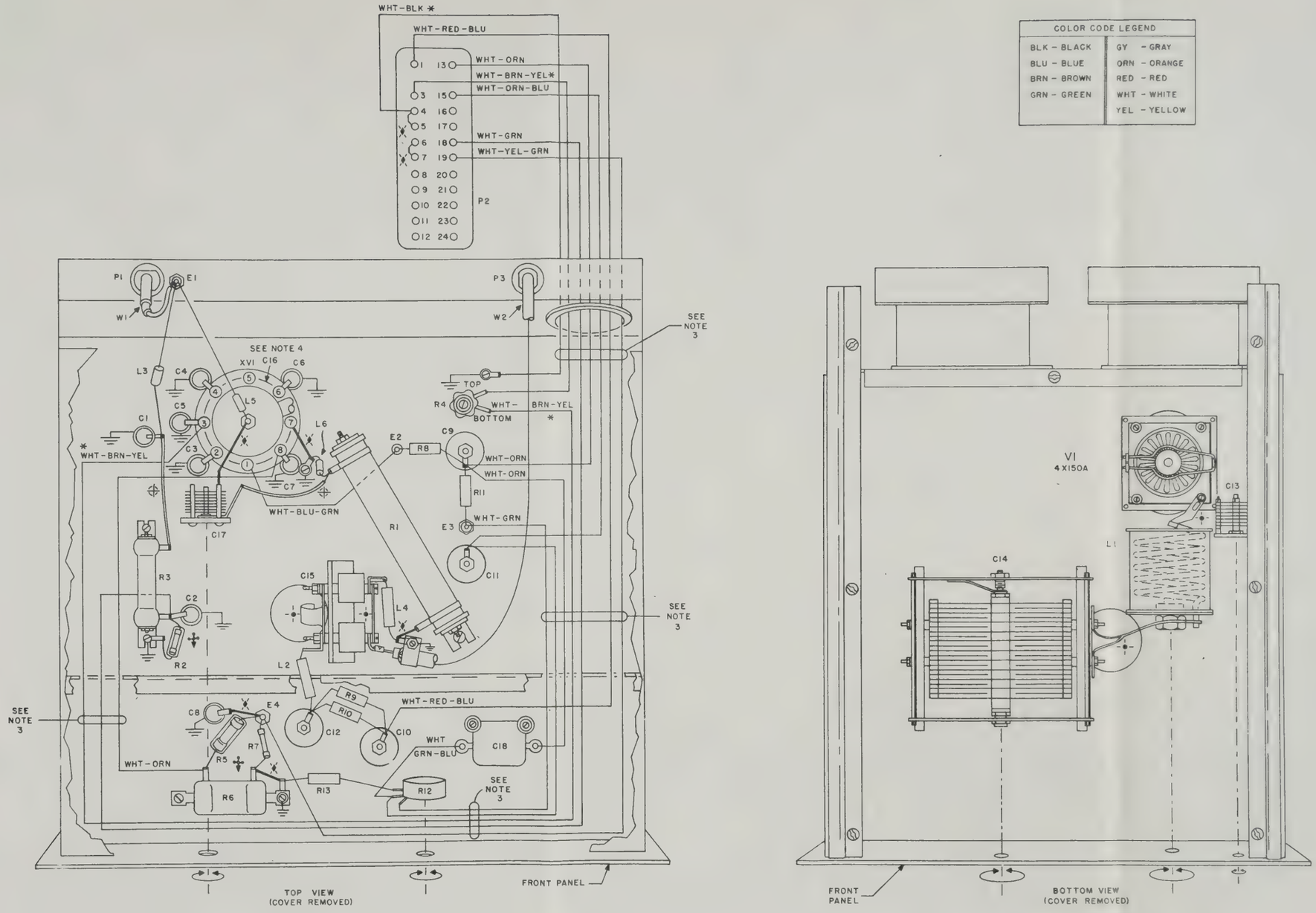

COLOR CODE LEGEND	
BLK - BLACK	GY - GRAY
BLU - BLUE	ORN - ORANGE
BRN - BROWN	RED - RED
GRN - GREEN	WHT - WHITE
	YEL - YELLOW

NOTES:

1. UNLESS OTHERWISE SPECIFIED, ALL WIRING IS # 22 AWG.
   - ⊕ DESIGNATES # 20 AWG WITH BLACK SLEEVING.
   - ✳ DESIGNATES # 20 AWG.
   - * DESIGNATES # 16 AWG.
   - ✣ DESIGNATES THESE COMPONENTS TO BE COVERED WITH VINYL TUBING.
   - -⊕- INDICATES SILVER PLATED METAL STRAP.
2. BARE WIRING IS RUN AS SHORT AND AS DIRECT AS POSSIBLE.
3. THIS WIRING IS RUN IN LACED CABLE FORM.
4. C16 IS A STRUCTURAL PART OF SOCKET ASSEMBLY XVI.

TM687-C5-62

Figure 291.1. (Added) *Radio Frequency Amplifier AM-1180/GRC, wiring diagram.*

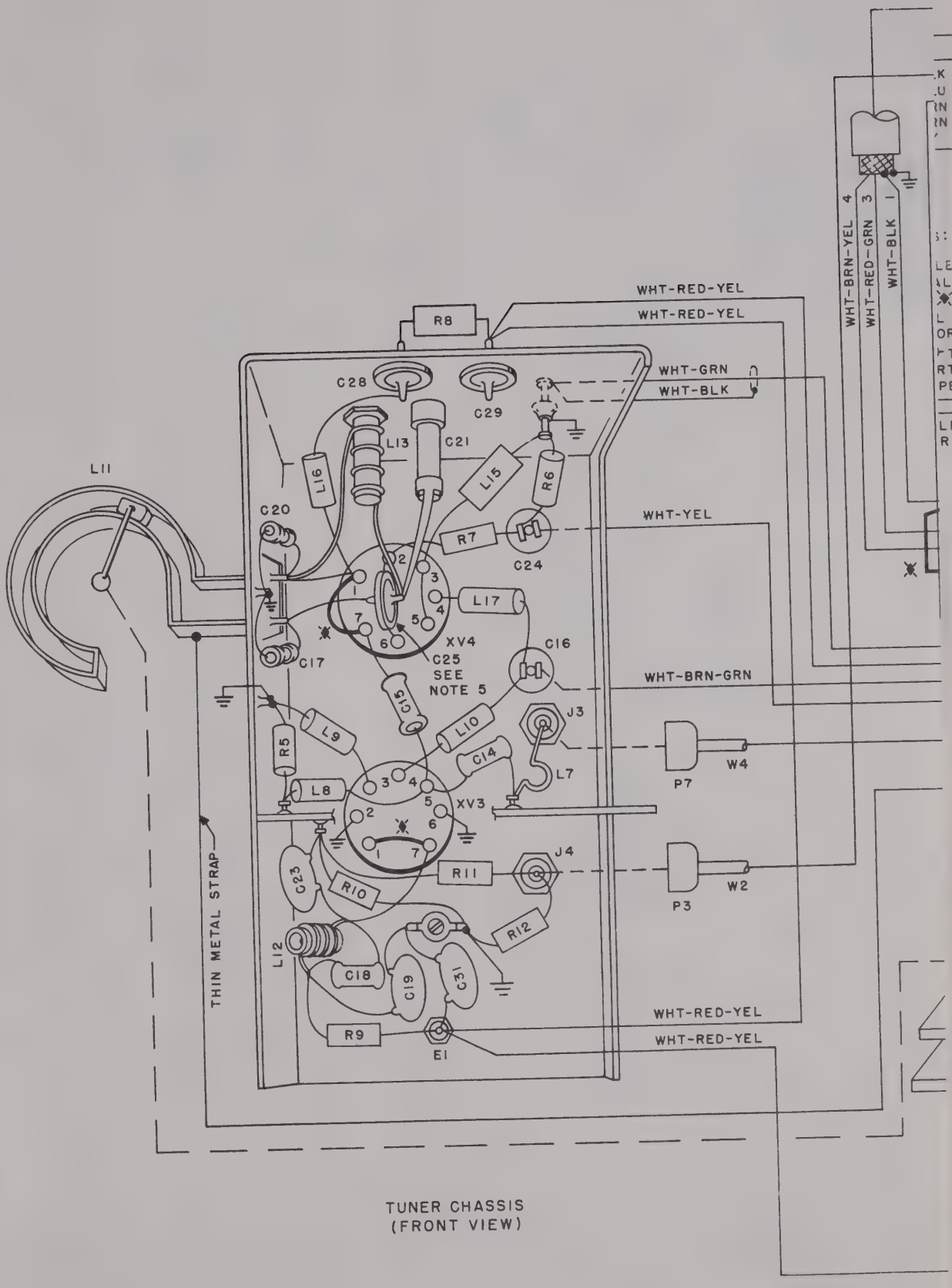
WHT-RED-YEL
WHT-RED-YEL
WHT-GRN
WHT-BLK
WHT-YEL
WHT-BRN-GRN
WHT-RED-YEL
WHT-RED-YEL
WHT-BRN-YEL 4
WHT-RED-GRN 3
WHT-BLK 1
R8
C28
C29
L13
C21
L16
L15
R6
C20
R7
C24
L17
C16
XV4
C25
SEE
NOTE 5
C17
C15
L10
J3
L9
R5
C14
L7
L8
XV3
P7
W4
J4
R11
C23
R10
R12
L12
C18
C19
C31
R9
E1
P3
W2
L11
THIN METAL STRAP
TUNER CHASSIS
(FRONT VIEW)

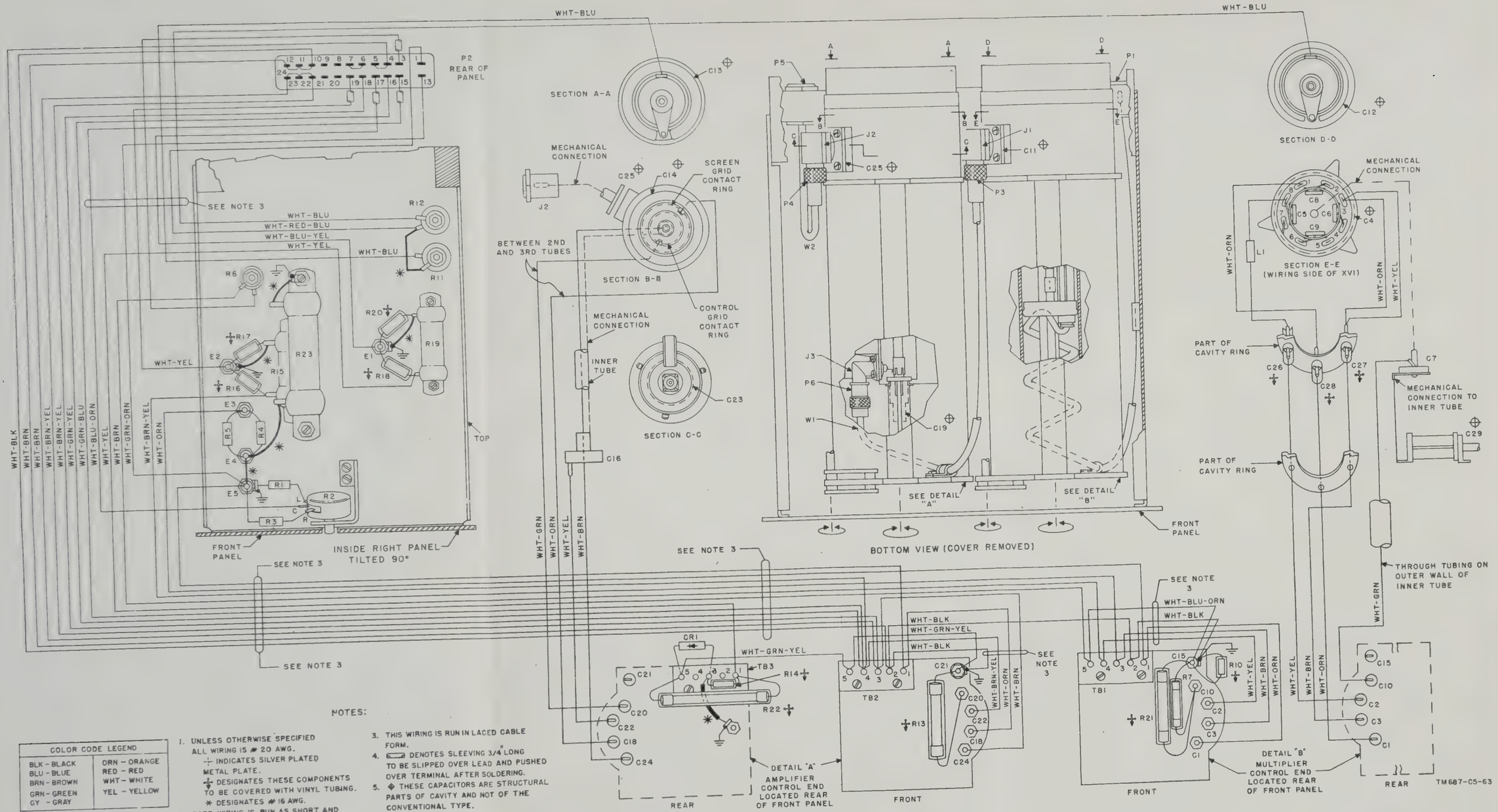

COLOR CODE LEGEND	
BLK – BLACK	ORN – ORANGE
BLU – BLUE	RED – RED
BRN – BROWN	WHT – WHITE
GRN – GREEN	YEL – YELLOW
GY – GRAY	

NOTES:

1. UNLESS OTHERWISE SPECIFIED ALL WIRING IS # 20 AWG.
   ⊣⊢ INDICATES SILVER PLATED METAL PLATE.
   ⏚ DESIGNATES THESE COMPONENTS TO BE COVERED WITH VINYL TUBING.
   * DESIGNATES # 16 AWG.
2. BARE WIRING IS RUN AS SHORT AND AS DIRECT AS POSSIBLE.
3. THIS WIRING IS RUN IN LACED CABLE FORM.
4. ▭ DENOTES SLEEVING 3/4" LONG TO BE SLIPPED OVER LEAD AND PUSHED OVER TERMINAL AFTER SOLDERING.
5. ◈ THESE CAPACITORS ARE STRUCTURAL PARTS OF CAVITY AND NOT OF THE CONVENTIONAL TYPE.

Figure 293.1 (Added) *Radio Frequency Amplifier-Multiplier AM-1178/GRC, wiring diagram.*

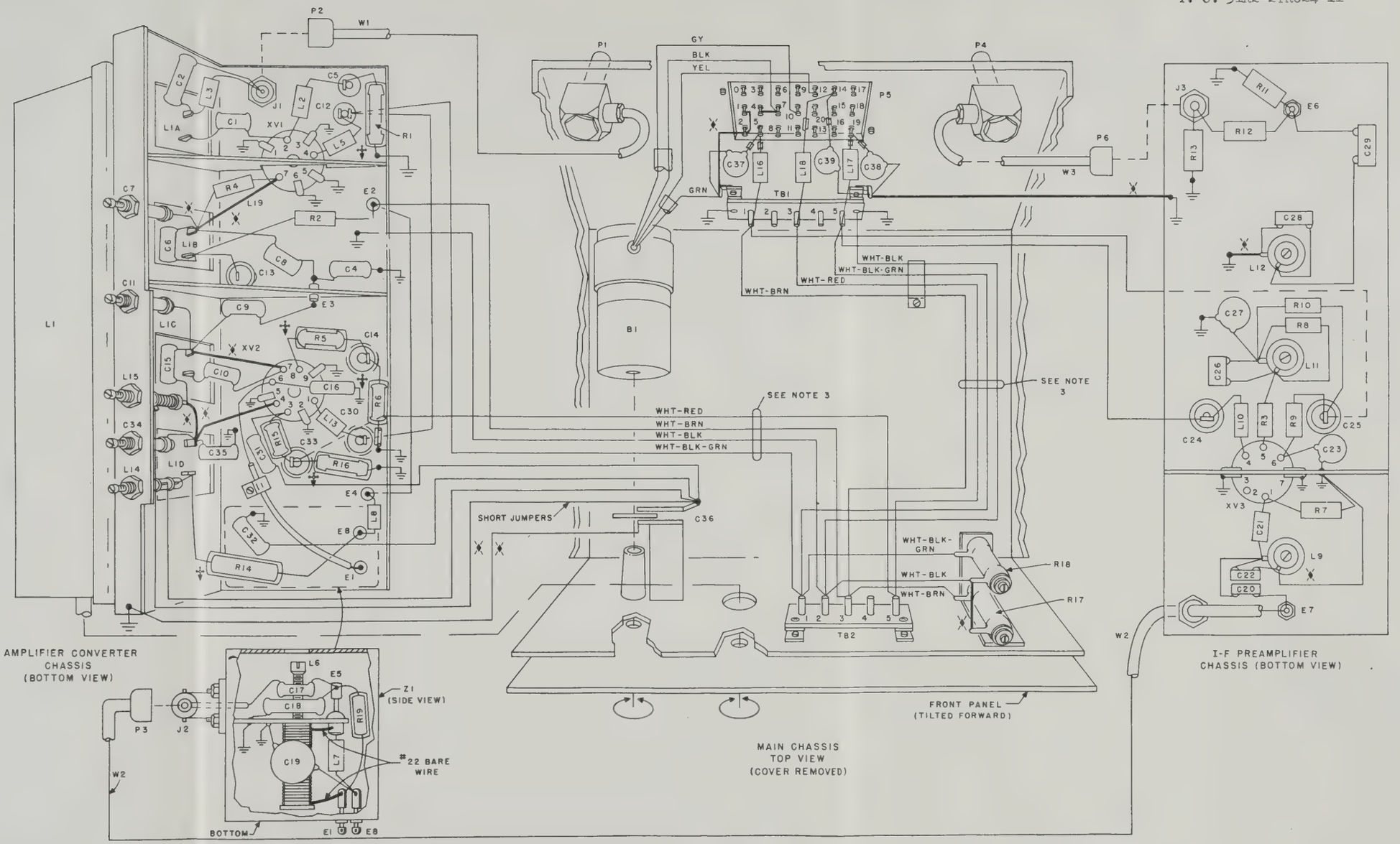

COLOR CODE LEGEND	
BLK - BLACK	GY - GRAY
BLU - BLUE	ORN - ORANGE
BRN - BROWN	RED - RED
GRN - GREEN	WHT - WHITE
YEL - YELLOW	

NOTES:

1. UNLESS OTHERWISE SPECIFIED, ALL WIRING IS # 22 AWG.
   - DESIGNATES # 20 AWG.
   - DESIGNATES THESE COMPONENTS TO BE COVERED WITH VINYL TUBING.
2. BARE WIRING IS RUN AS SHORT AND AS DIRECT AS POSSIBLE.
3. THIS WIRING IS RUN IN LACED CABLE FORM.
4. DESIGNATES SLEEVING USED ON THESE LEADS.

Figure 306.1. (Added) *Amplifier-Converter AM-1179/GRC, wiring diagram.*

COLOR CODE LEGEND	
· BLACK	ORN - ORANGE
· BLUE	RED - RED
· BROWN	WHT - WHITE
· GREEN	YEL - YELLOW
· GRAY	

3S OTHERWISE SPECIFIED:
. WIRING IS #22 AWG.
DESIGNATES #20 AWG.
3ARE WIRING IS RUN AS
T AND AS DIRECT AS POSSIBLE.
HESE CAPACITORS ARE STRUCTURAL
S AND NOT OF THE CONVENTIONAL
.
3 INDICATES CABLING.
ER OUTSIDE OF C25 TO
IINALS 2 AND 6 OF XV4.

Note 5. Delete the last two sentences and substitute:

THE SWITCH IS OPEN FOR RADIO AMPLIFIER AM–912/TRC AND RADIO FREQUENCY AMPLIFIER-MULTIPLIER AM–1178/GRC. IT IS CLOSED FOR RADIO FREQUENCY AMPLIFIER AM–1180/GRC AND RADIO FREQUENCY AMPLIFIER-MULTIPLIER AM–915/TRC.

Add note 21 after note 20.

21. PINS 16 AND 17 NOT CONNECTED IN RADIO FREQUENCY AMPLIFIER AM–1180/GRC AND RADIO FREQUENCY AMPLIFIER AM–912/TRC.

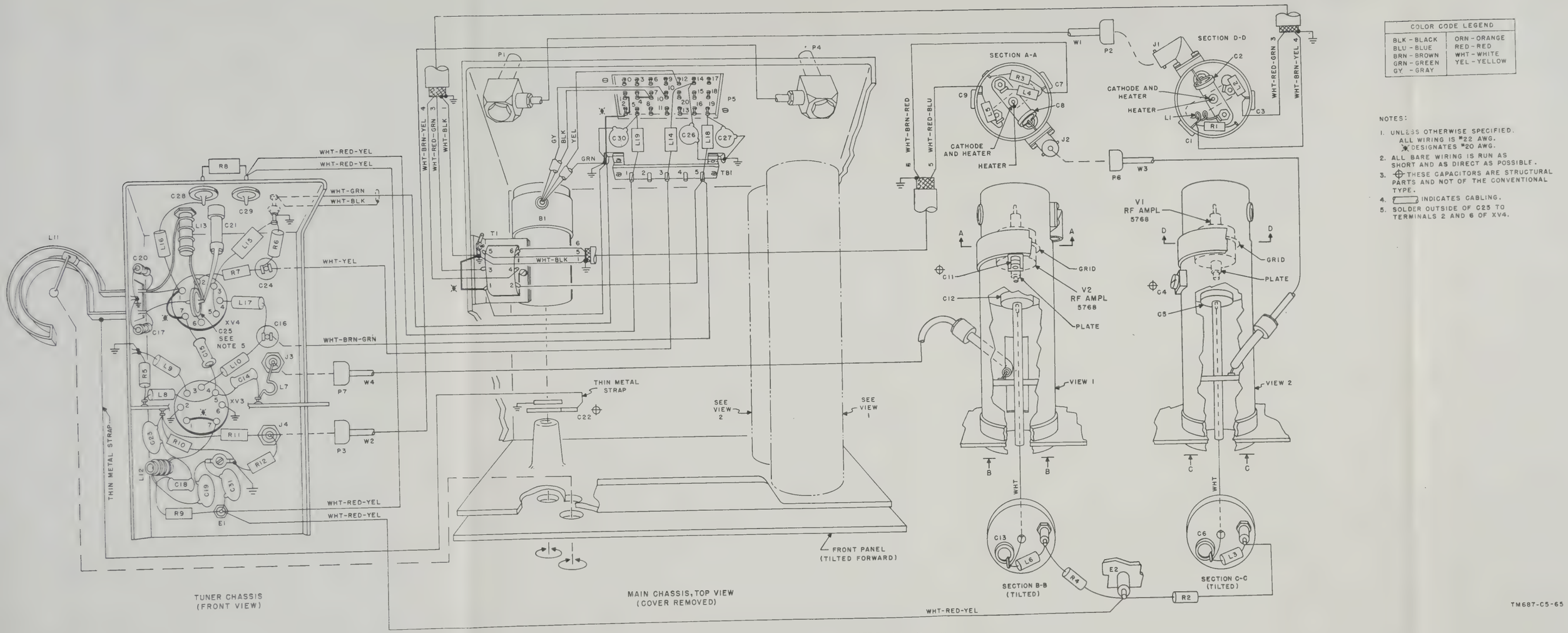

Figure 309. (Added) *Amplifier-Converter AM-1177/GRC, wiring diagram.*

TM687-C5-65

Note 5. Delete the last two sentences and substitute:

THE SWITCH IS OPEN FOR RADIO AMPLIFIER AM-912/TRC AND RADIO FREQUENCY AMPLIFIER-MULTIPLIER AM-1178/GRC. IT IS CLOSED FOR RADIO FREQUENCY AMPLIFIER AM-1180/GRC AND RADIO FREQUENCY AMPLIFIER-MULTIPLIER AM-915/TRC.

Add note 21 after note 20.

21. PINS 16 AND 17 NOT CONNECTED IN RADIO FREQUENCY AMPLIFIER AM-1180/GRC AND RADIO FREQUENCY AMPLIFIER AM-912/TRC.

RADIO SETS AN/TRC–24, AN/GRC–75, AN/GRC–78, AND AN/GRC–81, RADIO TERMINAL SETS AN/TRC–35, AN/GRC–76, AN/GRC–79, AND AN/GRC–82, AND RADIO RELAY SETS AN/TRC–36, AN/GRC–76, AN/GRC–80, AND AN/GRC–83

TM 11–687
TO 31R2–2TRC24–11
CHANGES No. 6

DEPARTMENTS OF THE ARMY
AND THE AIR FORCE
WASHINGTON 25, D.C., *22 July 1959*

TM 11–687/TO31R2–2TRC24–11, 14 September 1955, is changed as follows:

Page 16, paragraph 9*a*(2). Add the following at the end of subparagraph (2):

An air filter (fig. 6.1) is mounted on top of the inside of the transmitter transit case. Remove and clean the air filter after every 90 hours of operation (par. 137*q*).

Caution: **Failure of electron tubes 4X150A and 4X150G will result from an inadequate supply of cooling air caused by a dirty air filter.**

Add figure 6.1 after figure 6.

Page 155, paragraph 137*p*. Add the following after subparagraph *p*:

q. Remove and clean the air filter mounted on top of the inside of the transmitter transit case (fig. 6.1) after every 90 hours of operation. Refer to paragraph 174.1 for procedures on removal and replacement of the air filter. Clean the air filter with Cleaning Compound. Saturate the filter with lubricating oil. Let the excess oil drain out before replacing the filter in the transit case.

Warning: **Cleaning Compound is flammable and its fumes are toxic. Do not use near a flame; provide adequate ventilation.**

[AG 413.44 (25 Jun 59)]

Caution: **Failure of electron tubes 4X150A and 4X150G will result from an inadequate supply of cooling air caused by a dirty air filter.**

Page 186, paragraph 153*a*(13). Add the following after subparagraph (13):

(14) Dirty transmitter air filter.

Caution: **Failure of electron tubes 4X150A and 4X150G will result from an inadequate supply of cooling air caused by a dirty air filter.**

Page 190, paragraph 174. Add paragraph 174.1 after paragraph 174.

174.1. Removal and Replacement of Air Filter in Transmitter Transit Case

a. Remove the transmitter from its transit case (par. 156).

b. Remove the three screws from the filter clamp.

c. Remove the clamp.

d. Remove the filter.

e. To replace with a clean filter, position the filter so that the arrow points away from the top of the transit case.

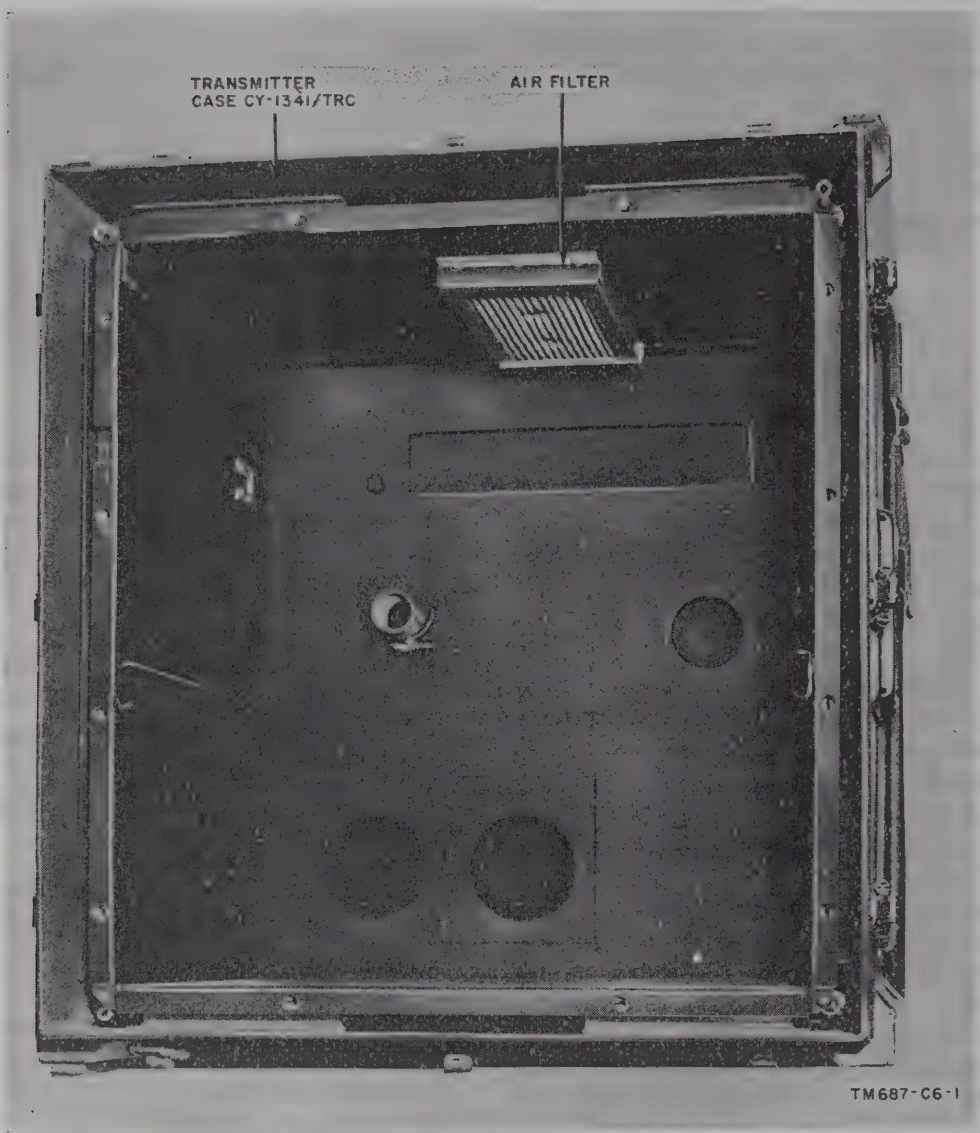

Figure 6.1. Air filter in transmitter transit case.

RADIO SETS AN/TRC-24, AN/GRC-75, AN/GRC-78, AND AN/GRC-81; RADIO TERMINAL SETS AN/TRC-35, AN/GRC-76, AN/GRC-79, AND AN/GRC-82: RADIO RELAY SET AN/TRC-36; AND RADIO REPEATER SETS AN/GRC-77, AN/GRC-80, AND AN/GRC-83

TM 11-687
TO 31R2-2TRC24-11
CHANGES No. 7

DEPARTMENTS OF THE ARMY
AND THE AIR FORCE
WASHINGTON 25, D. C., *26 May 1960*

TM 11-687/TO 31R2-2TRC24-11, 14 September 1955, is changed as indicated so that the manual also applies to the following equipments:

Nomenclature	*Order No.*	*Serial No.*
Radio Set Group AN/TRA-25	4120-PP-60	All
Radio Transmitter T-302/TRC	39906-PP-58	All

Change the title of the manual to: RADIO SETS AN/TRC-24, AN/GRC-75, AN/GRC-78, AND AN/GRC-81; RADIO TERMINAL SETS AN/TRC-35, AN/GRC-76, AN/GRC-79, AND AN/GRC-82; RADIO RELAY SET AN/TRC-36; AND RADIO REPEATER SETS AN/GRC-77, AN/GRC-80, AND AN/GRC-83.

Note. A parenthetical reference to previous Changes (example: "page 2 of C 2") indicates that pertinent material was published in that change.

Change "48" to 48.1 in the following places:

Page 61, paragraph 47*a*(2), line 2.

Page 62, paragraph 47*b*, line 5.

Page 62, paragraph 47*b*(2), line 2.

Page 4, paragraph 4*a*(2), line 7. After "68,000 cps," add:

(to 108,000 cps when transmitters procured on Order No. 39906-PP-58 are used).

Page 10, paragraph 5 (page 1 of C 5). Make the following changes:

Subparagraph *a*. Opposite "Frequency range" and after the fourth item, add:

790 to 915 mc in 250 discrete RF channels with 0.5-mc adjacent channel spacing, or 125 discrete RF channels with 1-mc adjacent channel spacing, for Amplifier-Converter AM-2537/TRA-25 (band F_{lo}).

840 to 965 mc in 250 discrete RF channels with 0.5-mc adjacent channel spacing, or 125 discrete RF channels with 1-mc adjacent channel spacing, for Amplifier-Converter AM-2537/TRA-25 (band F_{hi}).

Opposite "Base-band frequency range," after "68,000 cps," add: (250 to 108,000 cps in transmitters procured on Order No. 39906-PP-58).

Opposite "Number of tubes" and after the second item, add: 30 (with AM-2537/TRA-25).

Subparagraph *c*. Opposite "Frequency range" and after the fourth item, add:

Continuous 790 to 965 mc (with AM-913/TRC and Mixer Stage, Frequency CV-932/TRA-25).

Opposite "Number of tubes" and after the fourth item, add: 30 (with AM-913/TRC and CV-932/TRA-25).

Subparagraph *e*. Opposite "Type" and after the fourth item, add:

Two four-stacked, folded-dipole assemblies mounted on a plane reflector, Antenna Assembly AS-1082/TRA-25 (band F).

Opposite "Operating frequency" and after the fourth item, add:

790 to 965 mc (with Antenna Assembly AS-1082/TRA-25).

Opposite "Antenna beam width" and after the existing item, add:

44° horizontal pattern and 20° vertical pattern to half-power points (with Antenna Assembly AS-1082/TRA-25).

Opposite "Gain" and after the existing item, add:

12 db over isotropic (Antenna Assembly AS-1082/TRA-25).

Opposite "Weight" and after the second item, add:

25 pounds (Antenna Assembly AS–1082/TRA–25).

Page 12, paragraph 7 (page 2 of C 5). Make the following changes:

Subparagraph *a*, line 8. Change "D" to: F_{hi} and F_{lo}.

Subparagraph *b*, chart. Add the following under the *"Quantity required"* heading opposite the indicated items in the "Major group" column:

Major group	F_{hi} and F_{lo} bands		
	Radio Set AN/TRC–24	Radio Terminal Set AN/TRC–35	Radio Relay Set AN/GRC–36
Radio Set Group OA–1387/GRC.	1	2	3
Radio Set Group AN/TRA–25.	1	2	3
Power Accessories Group OA–1676/GRC.	1	1	1
Generator Set Group OA–1675/GRC.	1	1	1
Antenna Group OA–1389/GRC.	1	1	2
Antenna Accessories Group OA–1398/GRC.	1	1	2
Amplifier Group OA–1392/GRC.	1	2	3

Subparagraph *c* (page 4 of C 5). Add subparagraph (1.1) after subparagraph (1).

(1.1) *Components of Radio Set Group AN/TRA–25.*

Quantity	Item	Height (in.)	Depth (in.)	Width (in.)	Unit weight (lb)
1	Amplifier-Converter AM–2537/TRA–25	6 3/16	15 5/16	11 15/16	25
1	Oscillator-Multiplier O–734/TRA–25.				
1	Oscillator-Multiplier O–735/TRA–25.				
1	Mixer Stage, Frequency CV–932/TRA–25	2 1/2	6 1/2	11 1/2	7
2	Antenna Assembly AS–1082/TRA–25.				
2	Cable Assembly, Radio Frequency CG–1886/U (80').				
2	Cable Assembly, Radio Frequency CG–1890/U (4'3").				
1	Cable Assembly, Special Purpose, Electrical CX–6128/U (5' 8").				
1	Case, Accessories CY–2852/TRA–25.				
2	Case, Antenna CY–2853/TRA–25.				
1	Case, Amplifier and Mixer Stage CY–2845/TRA–25	18 3/8	17 1/8	50 5/8	22
1	Wrench, modified No. 6 multiple spline.				
1	Wrench, modified No. 4 multiple spline.				
1	Wrench, No. 2 multiple spline.				
1	Wrench, No. 4 multiple spline.				
1	Wrench, Allen No. 6.				
1	Wrench, Allen No. 8.				
1	Tube puller.				
1	Cable adapter.				
1	Set running spares (par. 26*g*).				

Make the following changes in the "Unit weight (lb)" column:

Subparagraph (6). Delete "39" and substitute: 75.

Subparagraph (7). Opposite the last item, insert: 70.

Subparagraph (8). Delete "39" and substitute: 85.

Subparagraph (10) (page 7 of C 5). Delete "39" and substitute: 90.

Subparagraph 12) (page 8 of C 5). Delete "39" and substitute: 95.

Page 15, paragraph 8 (page 8 of C 5), chart. Add the following:

Component	Common nomenclature used in text
Amplifier-Converter AM–2537/TRA–25.	Transmitter F-band rf tuner
Mixer Stage, Frequency CV–932/TRA–25.	F-band frequency mixer
Antenna Assembly AS–1082/TRA–25.	F-band antenna assembly
Oscillator-Multiplier O–734/TRA–25.	Oscillator-multiplier
Oscillator-Multiplier O–735/TRA–25.	Oscillator-multiplier

Page 20, paragraph 10*b* (page 10 of C 5), last sentence. Change "150.1" to:149.5.

Page 22, paragraph 13.1 (page 10 of C 5). Add paragraph 13.2 after paragraph 13.1.

13.2. Description of Amplifier-Converter AM–2537/TRA–25

a. General. Amplifier-Converter AM–2537/TRA–25 is a plug-in unit used in the transmitter for F_{lo}-band operation from 790 to 915 mc and for F_{hi}-band operation 840 to 965 mc. The unit consists of a four-tube, oscillator-multiplier plug-in chassis (Oscillator-Multiplier O–734/TRA–25 for the F_{lo} band or Oscillator-Multiplier O–735/TRA–25 for the F_{hi} band), a mixer cavity, a final amplifier, a power-supply chassis, and a gear-drive and dial mechanism. RF input, RF output, DC power, and AC heater voltage connections are provided. An air-duct system is included for cooling the cavities.

b. Front Panel. Two carrying handles are provided on the front panel to remove the unit from the transmitter or from the transit case. Camlock fasteners secure the unit to the transmitter or to the transit case. Controls and instruments on the front panel are shown in figure 89.2.

Page 26, paragraph 15*b* (page 10 of C 5). Make the following changes:

Subparagraph heading. After *"System,"* add: (*Bands* A, B, C, and D).

Add subparagraph *c* after subparagraph *b*.

c. Antenna System (F-Bands). Antenna Assembly AS–1082/TRA–25 is used for F-band operation of Radio Set AN/TRC–24. The F-band antenna assembly consists of two Antennas AS–1083/TRA–25 stacked horizontally. Each antenna consists of four pretuned, folded dipoles mounted on a plane reflector and enclosed in a fiberglass cover. Dipole pairs are fed in parallel through a Tee coaxial transformer (fig. 77.1). Another Tee coaxial transformer connects the two dipole pairs to form the F-band receiver or transmitter antenna. The antenna is matched to an unbalanced 50-ohm circuit through a balun transformer and the 50-ohm transmission line. One antenna is connected to Radio Transmitter T–302/TRC and the other to Radio Receiver R–417/TRC by Cable Assembly, Radio Frequency CG–1886/U. The transmitting and receiving antennas may both be mounted on a single Mast AB–235/G, or on separate ones, depending on the type of installation required. The length of the dipoles and interconnecting cables is factory-adjusted to cover the 790- to 965-mc frequency range. The F-band antenna assembly is designed to operate without tuning adjustment. Both the transmitting and the receiving antennas are horizontally polarized.

Page 28, paragraph 18*a*(1) (page 11 of C 5). In the last sentence, change "600" to: 965.

Page 33, paragraph 20. Make the following changes:

Subparagraph *a*, line 4. After "225 mc," add: The unit is also used in conjunction with the F-band frequency mixer (*c* below).

Subparagraph *b*. Add subparagraph *c* after subparagraph *b*.

c. Mixer Stage, Frequency CV–932/TRA–25. The F-band frequency mixer is a plug-in unit used in the receiver in conjunction with Amplifier-Converter AM–913/TRC. The F-band frequency mixer physically replaces the bandpass filter in Radio Receiver R–417/TRC. The unit consists of two preselector cavities, a directional coupler, a mixer diode, a low-pass filter, a DC return assembly, and a bandpass filter. On the front panel are two carrying handles, two HIGH-LOW dial knobs for selection of the desired frequency, and two connectors, LOCAL OSC and XTAL CUR.

Page 38, paragraph 24. Make the following changes:

Add subparagraph *h.1* after subparagraph *h*.

h.1. Cable Assemblies, Radio Frequency CG–1890/U (fig. 85.1). The two 4-foot, 3-inch cable assembles are used to connect the transmitter F-band RF tuner to the F-band frequency mixer. The cables have a UG–573A/U connector at each end.

Add subparagraph *j.1* after subparagraph *j*.

j.1. Cable Assemblies, Radio Frequency CG–1886/U. (fig. 85.1). These cable assemblies, approximately 80 feet long, are used to connect the transmitter and the receiver to the F-band antenna assembly. This cable has a UG–707A/U connector at each end.

Add subparagraph *k*(8) after subparagraph *k*(7).

(8). Cable Assembly, Special Purpose, Electrical CX–6128/U. This cable assembly, approximately 5-feet, 8-inches long, is used to connect the transmitter F-band RF tuner to Radio Transmitter T–302/TRC while internal tuning adjustments are made. At one end of this adapter cable is a connector for Radio Transmitter T–302/TRC; at the other end is a connector that mates with connector J204 on the transmitter F-band RF tuner.

Page 40, paragraph 25. Add the following after subparagraph *j:*

k. Case, Amplifier and Mixer Stage CY–2854/TRA–25. This is a metal case that contains the AM–2537/TRA–25 and the CV–932/TRA–25. The cover is held in place by snap fasteners. The contents are positioned by metal runners and held in place by Camlock fasteners.

l. Case, Antenna CY–2853/TRA–25. This is an aluminum-clad plywood case designed to hold one Antenna Assembly AS–1082/TRA–25, one CG–1886/U cable, and one CG–1890/U cable. The cables are secured to the bottom of the case by four footman loops. The antenna assembly is shock-mounted and secured in place by clamps held down by wingnuts. The cover is secured to the case by snap fasteners.

Page 41, paragraph 26 (page 13 of C 5). Make the following changes:

Subparagraph *a*, last line. Change "*f*" to *g*.

Add subparagraph *g* after subparagraph *f*.

g. Running Spares Furnished With Radio Set Group AN/TRA–25.

Quantity	Item
2	Tube, electron 5876
1	Tube, electron 6939
2	Tube, electron 12AT7WA
1	Tube, electron 3CX100A5, special
5	Fuse, 3/10 amp, 3AG
1	Antenna AS–1083/TRA–25
1	Crystal CR–51/U (38.347220 mc)
1	Crystal CR–51/U (41.412500 mc)
1	Crystal 1N21ER

Paragraph 27 (page 13 of C 5). Add after the last sentence: No F-band circuit labels (Amplifier-Converter AM–2537/TRA–25 and Mixer Stage, Frequency CV–932/TRA–25) are furnished.

Page 42, paragraph 30 (page 14 of C 5). Designate the existing material: *a*.

Add subparagraph *b*.

b. For F-band operation, Amplifier-Converter AM–2537/TRA–25 is furnished as a plug-in unit for use with Radio Transmitter T–302/TRC. The B-band RF tuner, Amplifier-Converter AM–913/TRC, is used in conjunction with Mixer Stage, Frequency CV–932/TRA–25 in Radio Receiver R–417/TRC. Mixer Stage, Frequency CV–932/TRA–25 physically replaces the bandpass filter in the receiver cabinet.

Page 43, paragraph 31 (page 14 of C 5). Make the following changes:

Subparagraph *a*, line 5. After "600 mc," add: When the transmitter F-band RF tuner is used in conjunction with the receiver B-band RF tuner and the F-band frequency mixer, the F-band (790 to 965 mc) is added.

At the end of subparagraph *a*, add: The F_{lo} band provides 250 channels that cover the 790- to 915 mc range in 0.5-mc steps or 125 channels that cover the same range in 1-mc steps. The F_{hi} band provides 250 channels that cover the 840- to 965-mc range in 0.5-mc steps or 125 channels that cover the same range in 1-mc steps. Because of overlapping, the combined F_{lo} and F_{hi} bands provide only 350

channels in 0.5-mc steps or 175 channels in 1-mc steps. The receiver intermediate-frequency bandwidth for the F-band is about .7 mc between the half-power points and 2.2 mc between the one-thousandth power points. The frequency stability is ±0.02 percent for normal temperature variations.

Subparagraph *b*, heading. Add: *(A-, B-, C-, and D-Bands).*

Add subparagraph *b.1* after subparagraph *b:*

b.1. Antennas (F-bands). Antenna Assembly AS–1082/TRA–25 (par. 15*c*) is used for F-band reception.

Page 55, paragraph 44*d*, chart. Add the following columns:

Antenna lead-in cable loss chart (RG–14A/U)			
800	850	900	950
0.051	0.054	0.057	0.058

Page 56, paragraph 44*e*. Add the following column to the antenna gain chart:

Frequency (mc)	790 to 965
Gain (db)	10

Page 63, paragraph 47*c*(2). Add the following column to the chart:

900 mc.
169
182
206
219

Page 67, paragraph 51. Add the following note after the heading:

Note. Bandpass filters are not used for F-band operation.

Page 71, paragraph 52*d*, chart. Add the following columns to the chart:

RF channel No.		Band F lo (790–915 mc)	Band F hi (840–965 mc)
Odd	Even		
1		790.500	840.500
	2	791.000	841.000
3		791.500	841.500
	4	792.000	842.000
5		792.500	842.500
	6	793.000	843.000
7		793.500	843.500
	8	794.000	844.000
9		794.500	844.500
	10	795.000	845.000
11		795.500	845.500
	12	796.000	846.000
13		796.500	846.500
	14	797.000	847.000
15		797.500	847.500
	16	798.000	848.000
17		798.500	848.500
	18	799.000	849.000
19		799.500	849.500
	20	800.000	850.000
21		800.500	850.500
	22	801.000	851.000
23		801.500	851.500
	24	802.000	852.000
25		802.500	852.500
	26	803.000	853.000
27		803.500	853.500
	28	804.000	854.000

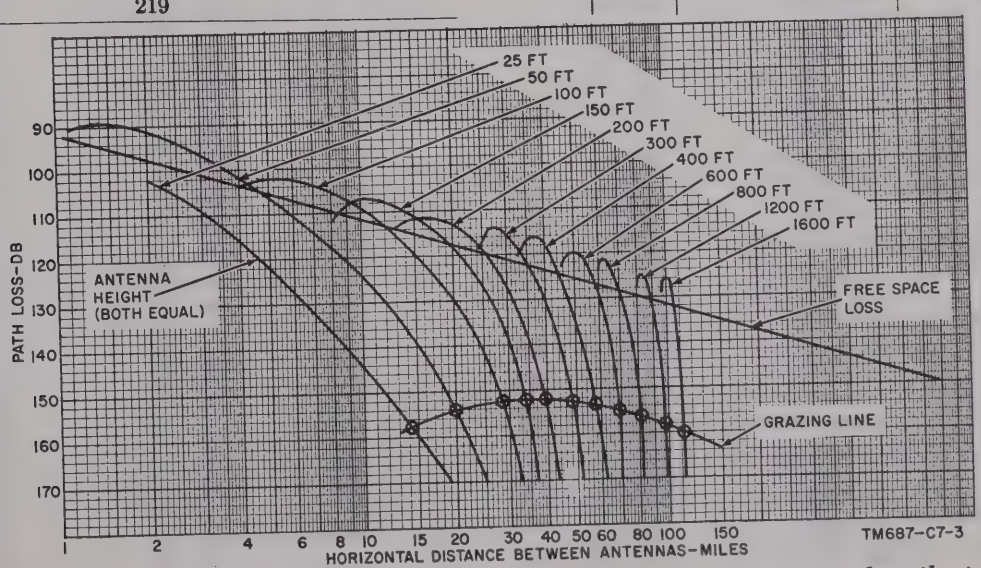

Figure 48.1. (Added) *Path loss between half-wave dipoles over smooth curved earth at 900 mc.*

RF channel No.		Band F_{lo} (790–915 mc)	Band F_{hi} (840–965 mc)
Odd	Even		
29		804.500	854.500
	30	805.000	855.000
31		805.500	855.500
	32	806.000	856.000
33		806.500	856.500
	34	807.000	857.000
35		807.500	857.500
	36	808.000	858.000
37		808.500	858.500
	38	809.000	859.000
39		809.500	859.500
	40	810.000	860.000
41		810.500	860.500
	42	811.000	861.000
43		811.500	861.500
	44	812.000	862.000
45		812.500	862.500
	46	813.000	863.000
47		813.500	863.500
	48	814.000	864.000
49		814.500	864.500
	50	815.000	865.000
51		815.500	865.500
	52	816.000	866.000
53		816.500	866.500
	54	817.000	867.000
55		817.500	867.500
	56	818.000	868.000
57		818.500	868.500
	58	819.000	869.000
59		819.500	869.500
	60	820.000	870.000
61		820.500	870.500
	62	821.000	871.000
63		821.500	871.500
	64	822.000	872.000
65		822.500	872.500
	66	823.000	873.000
67		823.500	873.500
	68	824.000	874.000
69		824.500	874.500
	70	825.000	875.000
71		825.500	875.500
	72	826.000	876.000
73		826.500	876.500
	74	827.000	877.000
75		827.500	877.500
	76	828.000	878.000
77		828.500	878.500
	78	829.000	879.000
79		829.500	879.500
	80	830.000	880.000
81		830.500	880.500
	82	831.000	881.000
83		831.500	881.500
	84	832.000	882.000
85		832.500	882.500
	86	833.000	883.000
87		833.500	883.500
	88	834.000	884.000
89		834.500	884.500
	90	835.000	885.000
91		835.500	885.500
	92	836.000	886.000
93		836.500	886.500
	94	837.000	887.000
95		837.500	887.500
	96	838.000	888.000
97		838.500	888.500
	98	839.000	889.000
99		839.500	889.500
	100	840.000	890.000
101		840.500	890.500
	102	841.000	891.000
103		841.500	891.500
	104	842.000	892.000
105		842.500	892.500
	106	843.000	893.000
107		843.500	893.500
	108	844.000	894.000
109		844.500	894.500
	110	845.000	895.000
111		845.500	895.500
	112	846.000	896.000
113		846.500	896.500
	114	847.000	897.000
115		847.500	897.500
	116	848.000	898.000
117		848.500	898.500
	118	849.000	899.000
119		849.500	899.500
	120	850.000	900.000
121		850.500	900.500
	122	851.000	901.000
123		851.500	901.500
	124	852.000	902.000
125		852.500	902.500
	126	853.000	903.000
127		853.500	903.500
	128	854.000	904.000
129		854.500	904.500
	130	855.000	905.000
131		855.500	905.500
	132	856.000	906.000
133		856.500	906.500
	134	857.000	907.000
135		857.500	907.500
	136	858.000	908.000
137		858.500	908.500
	138	859.000	909.000
139		859.500	909.500
	140	860.000	910.000
141		860.500	910.500
	142	861.000	911.000
143		861.500	911.500
	144	862.000	912.000

RF channel No.		Band Flo (790–915 mc)	Band Fhi (840–965 mc)
Odd	Even		
145		862.500	912.500
	146	863.000	913.000
147		863.500	913.500
	148	864.000	914.000
149		864.500	914.500
	150	865.000	915.000
151		865.500	915.500
	152	866.000	916.000
153		866.500	916.500
	154	867.000	917.000
155		867.500	917.500
	156	868.000	918.000
157		868.500	918.500
	158	869.000	919.000
159		869.500	919.500
	160	870.000	920.000
161		870.500	920.500
	162	871.000	921.000
163		871.500	921.500
	164	872.000	922.000
165		872.500	922.500
	166	873.000	923.000
167		873.500	923.500
	168	874.000	924.000
169		874.500	924.500
	170	875.000	925.000
171		875.500	925.500
	172	876.000	926.000
173		876.500	926.500
	174	877.000	927.000
175		877.500	927.500
	176	878.000	928.000
177		878.500	928.500
	178	879.000	929.000
179		879.500	929.500
	180	880.000	930.000
181		880.500	930.500
	182	881.000	931.000
183		881.500	931.500
	184	882.000	932.000
185		882.500	932.500
	186	883.000	933.000
187		883.500	933.500
	188	884.000	934.000
189		884.500	934.500
	190	885.000	935.000
191		885.500	935.500
	192	886.000	936.000
193		886.500	936.500
	194	887.000	937.000
195		887.500	937.500
	196	888.000	938.000
197		888.500	938.500
	198	889.000	939.000
199		889.500	939.500
	200	890.000	940.000
201		890.500	940.500
	202	891.000	941.000
203		891.500	941.500
	204	892.000	942.000
205		892.500	942.500
	206	893.000	943.000
207		893.500	943.500
	208	894.000	944.000
209		894.500	944.500
	210	895.000	945.000
211		895.500	945.500
	212	896.000	946.000
213		896.500	946.500
	214	897.000	947.000
215		897.500	947.500
	216	898.000	948.000
217		898.500	948.500
	218	899.000	949.000
219		899.500	949.500
	220	900.000	950.000
221		900.500	950.500
	222	901.000	951.000
223		901.500	951.500
	224	902.000	952.000
225		902.500	952.500
	226	903.000	953.000
227		903.500	953.500
	228	904.000	954.000
229		904.500	954.500
	230	905.000	955.000
231		905.500	955.500
	232	906.000	956.000
233		906.500	956.500
	234	907.000	957.000
235		907.500	957.500
	236	908.000	958.000
237		908.500	958.500
	238	909.000	959.000
239		909.500	959.500
	240	910.000	960.000
241		910.500	960.500
	242	911.000	961.000
243		911.500	961.500
	244	912.000	962.000
245		912.500	962.500
	246	913.000	963.000
247		913.500	963.500
	248	914.000	964.000
249		914.500	964.500
	250	915.000	965.000

Page 84, paragraph 58. Add paragraph 58.1 after paragraph 58. 58.1. Restricted Channels in F-Band Operation.

The tables in *a* and *b* below list the transmitter channels which produce interference in the corresponding receiver channels. The *Weak interference* column shows channels with an interference level of 6 uv or less.

a. Restricted Channels, F_{lo} Band.

Receiver channel	Do not use transmitter channel	
	Weak interference	Strong interference
1		1, 193, 195
3		3, 193, 195
5	65	5, 193, 197
7	65	7, 191, 197
9	65	9, 191, 197
11		11, 191
13		13, 189, 199
15		15, 189, 199
17	67	17, 189, 199
19	67	19, 187
21	67	21, 187, 201
23		23, 187, 201
25		25, 185, 201
27		27, 185
29[a]	69 (1–249)	29, 185, 203
31[a]	69 (1–249)	31, 183, 203
33	69	33, 183, 203
35		35, 183
37		37, 181, 205
38		39, 181, 205
41	71	41, 181, 205
43	71	43, 179
45	71	45, 179, 207
47		47, 179, 207
49		49, 177, 207
51		51, 177
53	73	53, 177, 209
55	73	55, 175, 209
57	73	57, 175, 209
59		59, 175
61		61, 173, 211
63		63, 173, 211
65	75	65, 173, 211
67	75	67, 171
69	75	69, 171, 213
71		71, 171, 213
73		73, 169, 213
75		75, 169
77	77	77, 169, 215
79	77	79, 167, 215
81	77	81, 167, 215
83		83, 167
85		85, 165, 217
87		87, 165, 217
89	79	89, 165, 217
91	79	91, 163
93	79	93, 163, 219
95		95, 163, 219
97		97, 161, 219
99		99, 161
101	81	101, 161, 221
103	81	103, 159, 221
105	81	105, 159, 221
107[b]	(1 thru 249)	107, 159
109		109, 157, 223
111		111, 157, 223
113	83	113, 157, 223
115	83	115, 155
117	83	117, 155, 225
119		119, 155, 225
121		121, 153, 225
123		123, 153
125	85	125, 153, 227
127	85	127, 151, 227
129	85	129, 151, 227
131		131, 151
133		133, 149, 229
135		135, 149, 229
137	87	137, 149, 229
139	87	139, 147
141	87	141, 147, 231
143		143, 147, 231
145		145, 231
147		147, 145
149	89	149, 145, 233
151	89	143, 151, 233
153	89	143, 153, 233
155		143, 155
157		141, 157, 235
159		141, 159, 235
161	91	141, 161, 235
163	91	139, 163
165	91	139, 165, 237
167		139, 167, 237
169		137, 169, 237
171		137, 171
173	93	137, 173, 239
175	93	135, 175, 239
177	93	135, 177, 239
179		135, 179
181		133, 181, 241
183		133, 183, 241
185	95	133, 185, 241
187	95	131, 187
189	95	131, 189, 243
191		131, 191, 243
193		129, 193, 243
195		129, 195
197	97	129, 197, 245
199	97	127, 199, 245
201	1, 97	127, 201, 245
203	97	127, 203
205	3	125, 205, 247
207		125, 207, 247
209	5, 99	125, 209, 247
211	99	123, 211
213	7, 99	123, 213, 249
215		123, 215, 249
217	9	121, 217, 249
219		121, 219
221	11, 101	121, 221
223	101	119, 223
225	13, 101	119, 225
227		119, 227
229	15	117, 229

Receiver channel	Do not use transmitter channel	
	Weak interference	Strong interference
231		117, 231
233	17, 103	117, 233
235	103	115, 235
237	19, 103	115, 237
239		115, 239
241	21	113, 241
243		113, 243
245	23, 105	113, 245
247	105	111, 247
249	25, 105	111, 249

[a] Never transmit or receive on channels 29 or 31.

[b] Never receive channel 107 low band except for short distances. Ok to transmit channel 107 low band to channel 7 high band.

b. Restricted Channels F_{hi} Band.

Receiver channel	Do not use transmitter channel	
	Weak interference	Strong interference
1	13, 81	1, 227, 221
3	13, 81	3, 227, 221
5	13, 81	5, 225, 119, 221
7	13	7, 225, 119
9	13	9, 225, 119, 223
11	13	11, 223
13	11, 83	13, 223, 117, 223
15	11, 83	15, 223, 117
17	11, 83	17, 221, 117, 225
19	11	19, 221 225
21	11	21, 221, 115, 225
23	11	23, 219, 115
25	9, 85	25, 219, 115, 227
27	9, 85	27, 219 227
29	9, 85	29, 217, 113, 227
31	9	31, 217, 113
33	9	33, 217, 113, 229
35	9	35, 215, 229
37	7, 87	37, 215, 111, 229
39	7, 87	39, 215, 111
41	7, 87	41, 213, 111, 231
43	7	43, 213, 231
45	7	45, 213, 109, 231
47[a]	7 (1–249)	47, 211, 109
49[a]	5, 89 (1–249)	49, 211, 109, 233
51	5, 89	51, 211, 233
53	5, 89	53, 209, 107, 233
55	5	55, 209, 107
57	5	57, 209, 107, 235
59	5	59, 207, 235
61	3, 91	61, 207, 105, 235
63	3, 91	63, 207, 105
65	3, 91	65, 205, 105, 237
67	3	67, 205 237
69	3	69, 205, 103, 237
71	3	71, 203, 103
73	1, 93	73, 203, 103, 239
75	1, 93	75, 203, 239
77	1, 93	77, 201, 101, 239
79	1	79, 201, 101
81		81, 201, 101, 241
83		83, 199 241
85	95	85, 199, 99, 241
87	95	87, 199, 99
89	95	89, 197, 99, 243
91		91, 197 243
93		93, 197, 97, 243
95		95, 195, 97
97	97	97, 195, 97, 245
99	97	99, 195, 245
101	97	101, 193, 95, 245
103		103, 193, 95
105		105, 193, 95, 247
107		107, 191 247
109	99	109, 191, 93, 247
111	99	111, 191, 93
113	99	113, 189, 93, 249
115		115, 189 249
117		117, 189, 91, 249
119		119, 187, 91
121		121, 187, 91
123	101	123, 187
125	101	125, 185, 89
127		127, 185, 89
129[b]	(1 thru 249)	129, 185, 89
131		131, 183
133	103	133, 183, 87
135	103	135, 183, 87
137	103	137, 181, 87
139		139, 181
141		141, 181, 85
143		143, 179, 85
145	105	145, 179, 85
147	105	147, 179
149	105	149, 177, 83
151		151, 177, 83
153		153, 177, 83
155		155, 175
157	107	157, 175, 81
159	107	159, 175, 81
161	107	161, 173, 81
163		163, 173
165		165, 173, 79
167		167, 171, 79
169	109	169, 171, 79
171	109	171
173	109	173, 169, 77
175		175, 169, 77
177		177, 169, 77
179		179, 167
181	111	181, 167, 75
183	111	183, 167, 75
185	111	185, 165, 75
187		187, 165
189		189, 165, 73
191		191, 163, 73

Receiver channel	Do not use transmitter channel	
	Weak interference	Strong interference
193	113	193, 163, 73
195	113	195, 163
197	113	197, 161, 71
199		199, 161, 71
201	1	201, 161, 71
203		203, 159
205	115, 3	205, 159, 69
207	115	207, 159, 69
209	115, 5	209, 157, 69
211		211, 157
213	7	213, 157, 67
215		215, 155, 67
217	117, 9	217, 155, 67
219	117	219, 155
221	117, 11	221, 153, 65
223		223, 153, 65
225	13	225, 153, 65
227		227, 151
229	119, 15	229, 151, 63
231	119	231, 151, 63
233	119, 17	233, 149, 63
235		235, 149
237	19	237, 149, 61
239		239, 147, 61
241	121, 21	241, 147, 61
243	121	243, 147
245	121, 23	245, 145, 51
247		247, 145, 59
249	25	249, 145

[a] Never transmit or receive, channels 47, 49. Ok to transmit channels 47, 49 high band to channels 147, 149 low band.

[b] Never receive channel 129 except for short distances. Channel 129 high band may be transmitted to channel 229 low band.

Page 85, paragraph 60 (page 16 of C 5). Make the following changes:

Subparagraph *a*. Oscillator frequency deviation chart, "Band" column. Change "A and B" to: **A, B, and F.**

Subparagraph *b*. Transmitted signal levels, chart, "Band" column, items 1 and 3. Change "A and B" to: **A, B, and F.**

Page 86, paragraph 60*b* (page 16 of C 5). Opposite "Afc pull-in range," change "(B- and C-Bands)" to **(B-, C-, and F-Bands).**

Page 90, paragraph 64*d* (page 16 of C 5). Make the following changes:

Subparagraph (1), line 14. Delete "four."

Subparagraph (2). Add the following: **For F-band operation, Mixer Stage, Frequency CV–932/TRA–25 must be used in conjunction with Amplifier-Converter AM–913/TRC.**

Page 91, paragraph 64*e*. Add the following note after the subparagraph heading:

Note. No bandpass filters are used in F-band operation. The F-band frequency mixer is used instead.

Page 101, paragraph 69 (page 24 of C 5). Add paragraph 69.1 after paragraph 69.

69.1. Assembling F-Band Antenna System (fig. 77.1)

a. General. The following parts are required to install the F-band antenna system:

(1) Antenna Assembly AS–1082/TRA–25, packed in Case, Antenna CY–2853/TRA–25.

(2) Two Cable Assemblies, Radio Frequency CG–1886/U, packed with the F-band antenna assembly.

b. Procedure. Install the F-band antenna assembly on the antenna mast provided with Radio Set AN/TRC–24. Use Antenna Reflector Support AB–325/TRC (H-frame assembly) and the mounting hardware (par. 7*c*(4)) supplied for attaching the B-band antenna reflector. The two antennas that make up the F-band antenna system must be horizontally polarized. One antenna is used for transmission, the other for reception. Use Cable Assemblies, Radio Frequency CG–1886/U to connect one antenna to Radio Receiver R–417/TRC and the other to Radio Transmitter T–302/TRC. Follow instructions in paragraph 69*b*(9) through (11) for securing the cables.

Page 105, paragraph 71*a*, chart. Make the following changes: "Cable" column, seventh item. After "CG–1030/U," add: (A-, B-, C-, and D-bands).

Add the following to the chart:

Cable	Crate No.	No. required	Fig. ref	Length (feet	Connects	
					From-	To-
CG-1886/U (F-band only).		2	85.1	80	ANTENNA jack on transmitter or receiver.	Transmitting or receiving antenna cable harness.
CG-1890/U (F-band only).		1	85.1	4¼	F-band transmitter RF tuner.	F-band frequency mixer.
CX-6128/U (during internal adjustments of F-band transmitter RF Tuner).		1		5⅔	F-band transmitter RF tuner.	Radio Transmitter T-302/TRC.

Page 108, figure 85. Add to caption: *(A-, B-, C-, and D-bands)*.

Page 110, figure 86. Add to caption: *(A-, B-, C-, and D-bands)*.

Page 119, paragraph 82.1 (page 27 of C 5). Add paragraph 82.2 after paragraph 82.1.

82.2. Amplifier-Converter AM–2537/TRA–25 Controls and Indicators

(fig. 89.2)

The following chart lists the front panel controls of the transmitter F-band RF tuner and indicates their functions.

Control or indicator	Function
REC OSC INJ control	Adjusts strength of oscillator-multiplier signal to receiver.
OSC OUTPUT control	Varies output power of doubler in oscillator-multiplier.
OSC TUNE control	Tunes doubler cavity in oscillator-multiplier.
MIXER TUNE[a] control.	Tunes mixer cavity.
PA TUNE[a] control	Tunes final amplifier cavity.
MIXER COUPLING control.	Adjusts probe position in mixer cavity to match output of mixer cavity to input of final cavity.
TEST MULT CATH switch.	Set in one of the following positions to monitor the associated transmitter F-band RF tuner circuit: 1ST TRIP CATH DOUB CATH MIXER CATH PA CATH REC XTAL CUR
350V control	Adjusts voltage of 350-volt supply.
BAND window	Color visible through window indicates whether high band or low band oscillator-multiplier is installed.

[a] When tuning to the desired frequency, the orange band on the associated dial is read for the F_{hi} range and the green band for the F_{lo} range.

Page 128, paragraph 89.1 (page 20 of C 5). Add paragraph 89.2 after paragraph 89.1.

89.2. Mixer Stage, Frequency CV–932/TRA–25 Controls

(fig. 95.2)

The following chart lists the front panel and rear controls of the F-band frequency mixer and indicates their functions:

Control	Function
Antenna HIGH-LOW tune control.	Sets antenna preselector to desired channel.
Mixer HIGH-LOW tune control.	Sets mixer preselector to desired channel.
LO FIL TUN control (rear of unit).	Tunes bandpass filter to frequency of signal from oscillator-multiplier in transmitter F-band RF tuner.

Page 131, paragraph 95*b* (page 30 of C 5). Make the following changes:

Last line, add: Refer to (4) below if the transmitter F-band RF tuner is used.

Add subparagraph (4) after subparagraph (3):

(4) *Presetting transmitter F-band RF tuner controls.*

Control	Position
MIXER TUNE control.	Desired channel (high band—orange dial, low band—green dial).
MIXER COUPLING control.	4.
PA TUNE control	Desired channel (high-band orange dial, low band—green dial).

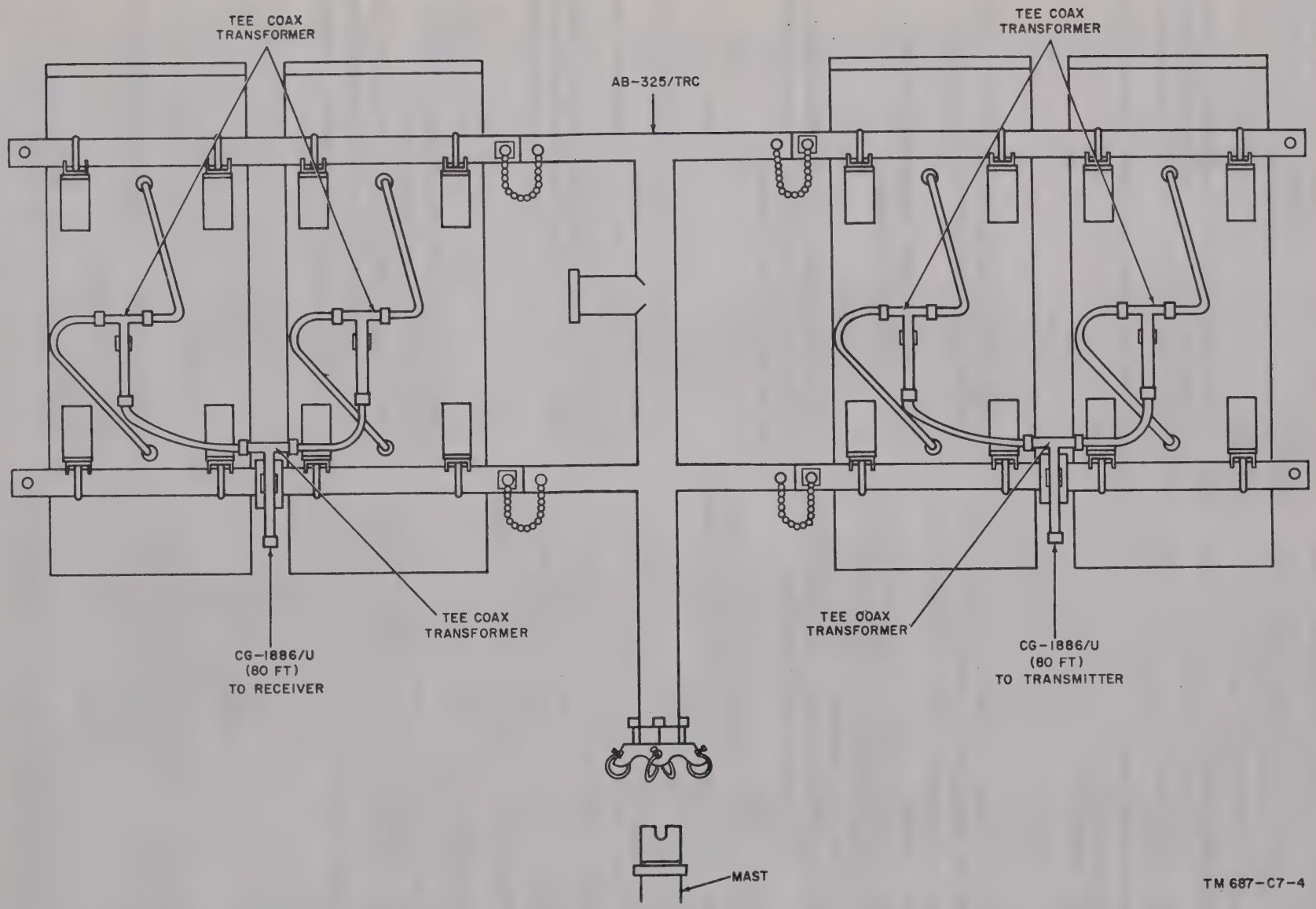

Figure 77.1. (Added) *Reflectors (Antenna Assembly AS-1082/TRA-25) showing cable harness and CG-1886/U, rear view.*

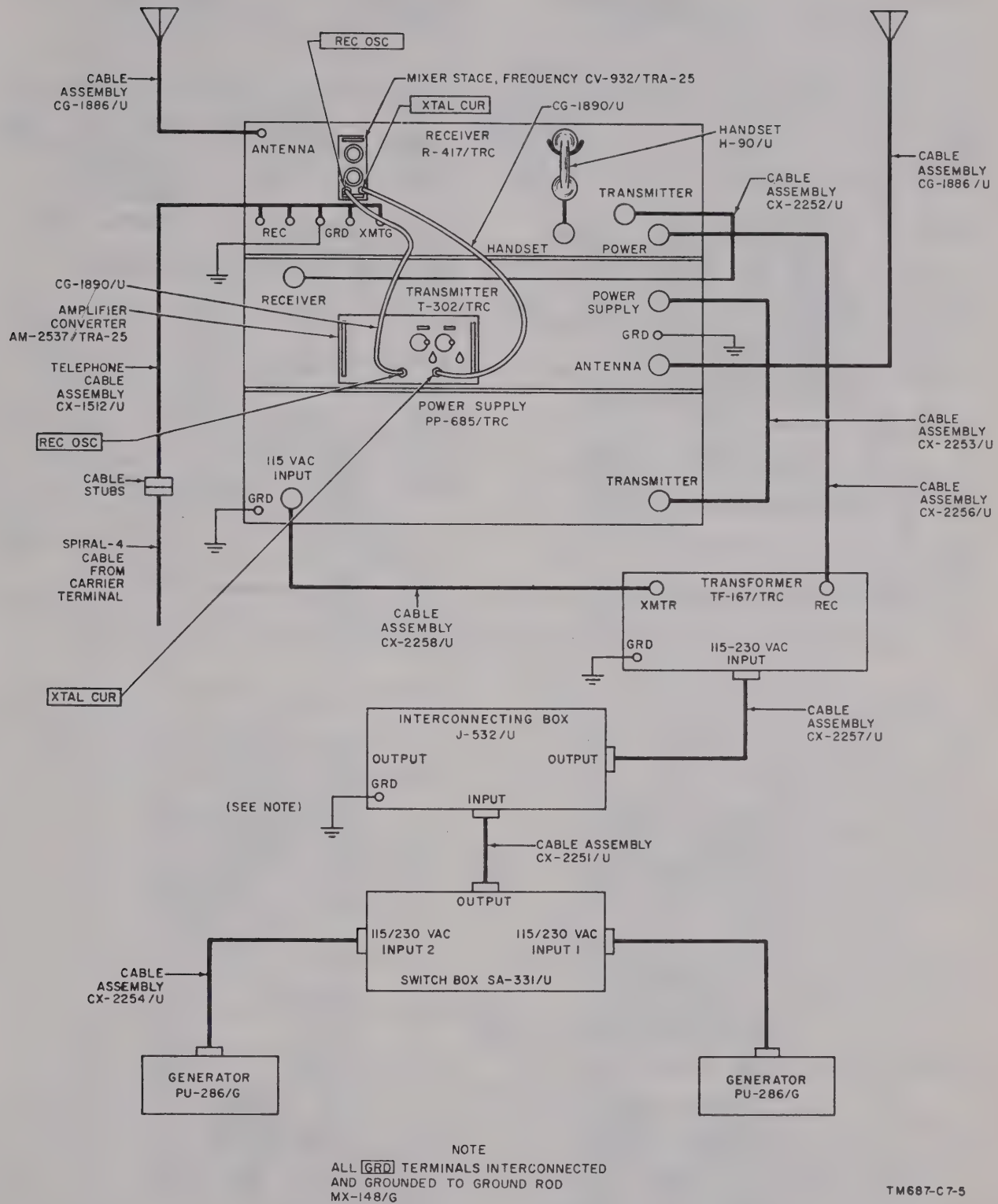

Figure 85.1. **(Added)** *Cabling diagram at a radio terminal, F-band operation.*

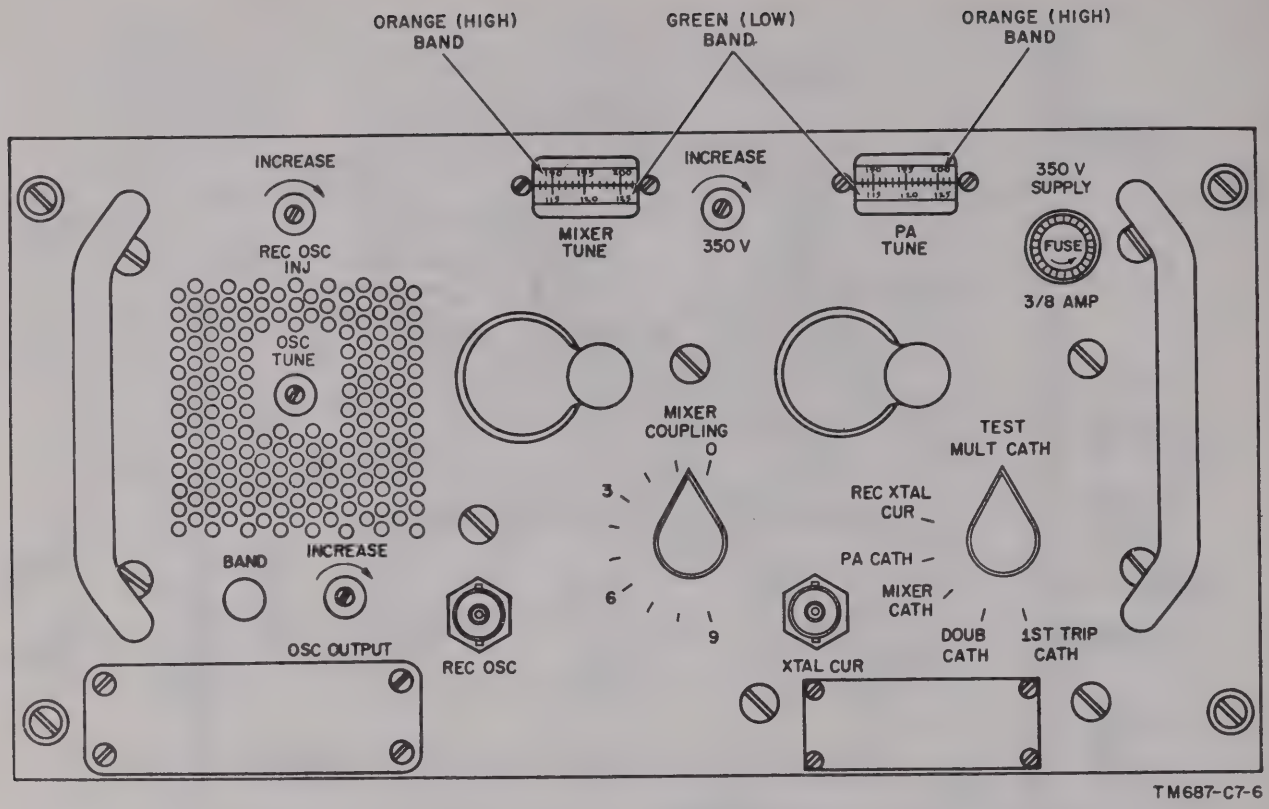

Figure 89.2. (Added) *Amplifier-Converter AM–2537/ TRA–25, front panel.*

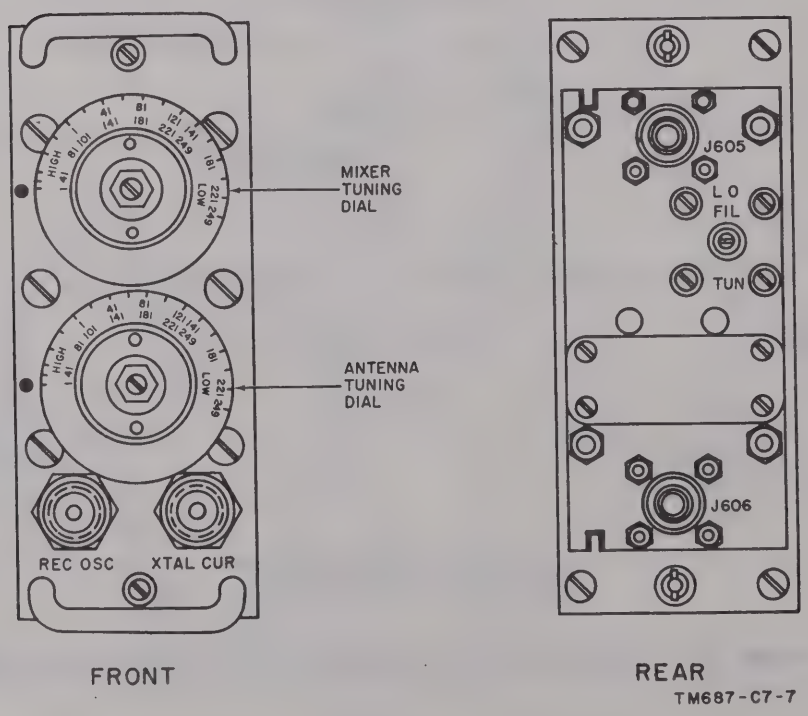

Figure 95.2. (Added) *Mixer Stage, Frequency CV–932/TRA–25, front panel.*

Paragraph 96*a*, line 2. After "CG–1030/U," add: (*A-, B-, C-, and D-band* operation) or CG–1886/U (*F-band* operation).

Page 133, paragraph 103 (page 30 of C 5). Make the following changes:

Subparagraph *b*, line 3. After "AM–1180/GRC," add: or Amplifier-Converter AM–2537/TRA–25.

Subparagraph *f*, (page 31 of C 5), line 1. After "(A-band)" add: Amplifier-Converter AM–2537/TRA–25 (F-band).

Page 134, paragraph 104. Make the following changes:

Subparagraph *b*. Delete and substitute:

b. Set the transmitter TEST switch to the DRIVER CATH position for A-, B-, C-, and D-band operations. For F-band operation, set the transmitter TEST switch to the MULT CATH position and set the TEST MULT CATH switch to the MIXER CATH position.

Subparagraph *e*, line 3. After "meter," add: for A-, B-, C-, and D-band operations. For F-band operation, make the adjustment for a reading of 25 to 30 microamperes on the transmitter TEST meter.

Page 134, paragraph 105*a* (page 31 of C 5). Make the following changes:

Change the subparagraph designation to: *a*

Delete subparagraph (5) and substitute:

(5) Adjust the SCREEN VOLTS ADJ control to its maximum counterclockwise position. This will produce a minimum indication on the power supply DC VOLTS meter.

Subparagraph (8), line 7. Delete the third sentence.

Subparagraph (9), line 6. Delete the last sentence.

Subparagraph (10). Delete the note and substitute:

Note. Subparagraphs (11) through (15) below cover adjustment of the INPUT LOADING control. Make this adjustment only if the PWR AMPL CATH meter indication exceeds 22 ua or if the PWR AMPL GRID indication is greater than 25 ua. A current greater than 25 ua would indicate a possible mismatch or too much drive.

Subparagraph (15), line 1. Delete the first and last sentences.

Subparagraph (18). Add the following note after subparagraph (18):

Note. Under normal conditions, the power output indicated on the wattmeter will range from 60 to 100 watts, depending on the operating frequency. To obtain a higher power output, the screen voltage may be increased to 275 volts, provided the PWR AMPL CATH meter indication does not exceed 25 ua. If the screen voltage is increased, repeat the procedures given in (7) through (10) above.

Paragraph 105*a*.1 (page 31 of C 5). Make the following changes:

Subparagraph (1). Delete the second sentence and substitute: Set the DC TEST switch on the power supply at the 750 LOWER SCALE position.

Delete subparagraphs (2), (3), and (4) and substitute:

(2) Set the 75V ADJ switch on the power supply at position 1.

(3) Set the DC TEST switch on the power supply at the 275 LOWER SCALE position.

(4) Set the SCREEN VOLTS ADJ control on the RF tuner to the maximum counterclockwise position. This will produce a minimum indication on the power supply DC VOLTS meter.

Delete subparagraph (5).

Delete subparagraph (18) and substitute:

(18) Under normal conditions, the power output indicated on the wattmeter will range from 60 to 115 watts, depending on the operating frequency. To obtain a higher output, the screen voltage may be increased to 275 volts, provided the PWR AMPL CATH meter indication does not exceed 25 ua.

Delete subparagraph (19) and substitute:

(19) If the SCREEN VOLTS ADJ control is readjusted, repeat the procedures given in (10) through (12) and (14) through (16) above.

Page 135, paragraph 105*b*. Make the following changes:

Subparagraph (1). Delete the second sentence and substitute: Set the DC TEST switch on the power supply to the 750 LOWER SCALE position.

Delete subparagraphs (2) and (3) and substitute:

(2) Set the 750V ADJ switch on the power supply to position 1.

(3) Set the DC TEST switch on the power supply to the 275 LOWER SCALE position.

Page 136, paragraph 105*b*. Delete subparagraphs (23) and (24) and substitute:

(23) Under normal conditions, the power output indicated on the wattmeter will range from 70 to 115 watts, depending on the operating frequency conditions. To obtain a higher output, the screen voltage may be increased to 275 volts, provided the PWR AMPL CATH indication does not exceed 25 ua.

(24) If the SCREEN VOLTS ADJ control is readjusted, repeat the procedures given in (14) through (20) above.

Paragraph 105*b*.1 (page 32 of C 5). Make the following changes:

Subparagraph (8) (page 32 of C 5). Delete subparagraph (8).

Subparagraph (11) (page 33 of C 5). Delete subparagraph (11) and substitute:

(11) Under normal conditions, the power output indicated on the wattmeter will range from 50 to 100 watts, depending on the operating frequency. To obtain a higher output, the screen voltage may be increased to 275 volts, provided the PWR AMPL CATH indication does not exceed 25 ua. If the screen voltage is adjusted to a higher value, repeat the procedures given in (9) and (10) above.

Add subparagraph *b*.2 after subparagraph *b*.1.

b.2. Turning Amplifier-Converter AM–2537/TRA–25 (Channels F1 Through F250).

Caution: **Do not tune the transmitter without connecting Wattmeter ME–82/U or the antenna to the ANTENNA jack.**

(1) Install the transmitter F-band RF tuner in Radio Transmitter T–302/TRC. Make sure the correct oscillator-multiplier for assigned channel (high or low) is installed.

(2) Preset the transmitter F-band RF tuner controls as follows:

(*a*) MIXER COUPLING to 4.

(*b*) MIXER TUNE to desired channel on high band (orange dial) or low band (green dial), as required.

(*c*) PA TUNE to desired channel on high band (orange dial) or low band (green dial), as required.

(3) Connect Wattmeter ME–82/U to the ANTENNA jack of the TS–302/TRC and to the dummy filter in the transmitter case next to the transmitter F-band RF tuner.

(4) Turn on the 115V AC switch on Power Supply PP–685/TRC, and adjust the 750V ADJ switch on the PP–685/TRC for a 900-volt reading on the DC VOLTS meter on the PP–685/TRC (DC TEST switch in 750 LOWER SCALE position).

(5) Set the DC TEST switch to the 275 LOWER SCALE position. Adjust the 350V control on the transmitter F-band RF tuner for a reading of 350 volts.

(6) Follow the procedures in paragraphs 98 and 104.

(7) With the TEST switch (T–302/TRC) in the MULT CATH position and the TEST MULT CATH switch (AM–2537/TRA–25) in the MIXER CATH position, adjust the DRIVER TUNE and DRIVER OUTPUT COUPLING controls on the T–302/TRC for 30 microamperes on the TEST meter.

(8) Adjust the MIXER TUNE, PA TUNE, and MIXER COUPLING controls on the transmitter F-band RF tuner for maximum indication (12 watts minimum) on Wattmeter ME–82/U.

(9) Turn off the 750V ADJ switch on the T–302/TRC.

(10) Disconnect Wattmeter ME–82/U from the transmitter.

(11) Connect cable CG–1886/U to the transmitter output connector and to the F-band antenna assembly.

(12) Turn on the 750V ADJ switch on the T–302/TRC.

Page 138, paragraph 110. Make the following changes:

Heading. Add: (A-, B-, C-, and D-Band Operations).

Add paragraphs 110.1 and 110.2 after paragraph 110.

110.1. Presetting Receiver Controls for F-Band Operation

Preset the controls of Amplifier-Converter AM–913/TRC as indicated in paragraph 110. Set the HIGH-LOW dials on Mixer Stage, Frequency CV–932/TRA–25 for the desired channel.

110.2. Preoperational Procedures for Setting Up Receiver F-Band Operation

a. Set up the T–302/TRC, with Amplifier-Converter AM–2537/TRA–25 and the F_{hi} or F_{lo} band oscillator-multiplier, as required, for normal operation (fig. 85.1, par. 339.3).

b. Connect Wattmeter ME–82/U to the ANTENNA terminal of the TS–302/TRC.

c. Install Amplifier-Converter AM–913/TRC with Mixer Stage, Frequency CV–932/TRA–25 in the R–417/TRC (fig. 85.1).

d. Turn on the transmitter and tune it (par. 105*b*.2).

e. Set the transmitter TEST switch to the MULT CATH position.

f. Remove the CV–932/TRA–25 from the AM–913/TRC. *Do not disconnect the CG–1890/U cables that connect to the transmitter F-band RF tuner.*

g. Adjust the LO FIL TUN control at the rear of the CV–932/TRA–25 for a maximum reading on the TEST meter. The meter reading must not go above 20 microamperes. If the reading tends to peak above 20 microamperes, turn the REC OSC INJ control counterclockwise to decrease the reading.

h. Replace the CV–932/TRA–25 in the receiver cabinet.

i. Set the CV–932/TRA–25 HIGH-LOW dials for the desired channel.

j. Adjust the REC OSC INJ control on the transmitter F-band RF tuner for a reading of 10 microamperes on the TEST meter.

k. Calibrate the AM–913/TRC (par. 113), and set it for the desired channel.

l. Connect cable CG–1886/U to the ANTENNA terminal of the R–417/TRC.

m. Turn on the AFC switch.

n. Set the MEASURE switch on the receiver to the SIG LEV position.

o. Adjust the F-band frequency mixer dials for a maximum reading on the MEASURE meter.

Page 139, paragraph 113 (page 35 of C 5). Make the following changes:

Subparagraph *a*(5). At the end of the subparagraph add: For the F-band tuner (Amplifier-Converter AM–913/TRC with Mixer Stage, Frequency CV–932/TRA–25), follow the procedure in (*i*) below.

Subparagraph *a*(5)(*h*). Add subparagraph (*i*) after subparagraph (*h*).

(*i*) When using the F-band tuner, remove the dummy filter from AM–913/TRC and insert Mixer Stage, Frequency CV–932/TRA–25. Make the necessary cable connections (fig. 85.1). Follow the instruction in paragraphs 110.1 and 110.2.

Page 141, paragraph 114. Make the following changes:

Subparagraph *g*, line 3 (page 35 of C 5). After "B-band," add: or F-band.

Subparagraph *j*, line 1. Change "Remove" to: For *A*-, *B*-, *C*-, or *D*-band operations, remove.

Subparagraph *k*, line 1. After "filter," add: (A-, B-, C-, or D-band operation) or Mixer Stage, Frequency CV–932/TRA–25 (F-band operation).

Subparagraph *p*, line 4 (page 35 of C 5). After "or B-band," add: or F-band.

Page 143, paragraph 118 (page 35 of C 5). Make the following changes:

Subparagraph *b*(3), line 5. After "or B-band," add: or F-band.

Subparagraph *c*(2), line 5. After "or B-band," add: or F-band.

Page 145, paragraph 119 (page 35 of C 5). Make the following changes :

Subparagraph *b*(2), last line. After "B-band," add: or F-band.

Subparagraph *c*(2), line 8. After "B-band," add: or F-band.

Page 146, paragraph 120*b*. Make the following changes:

Subparagraph (2), line 2. After "30 ua," add: (*A*-, *B*-, *C*-, or *D*-band) or 15 ua (F-bands).

Subparagraph (5), (page 35 of C 5), last line. Add: The reading is approxi-

mately +900 volts when the F-band tuner is used.

Page 147, paragraph 121*b* (page 36 of C 5), chart. Make the following changes: In the Normal indication on meter column:

Opposite "MOD IKC IN" position. After "or B-band," add: or F-band.

Opposite "MULT GRID" position, add: (not used for F-band).

Opposite "MULT CATH" position. Add: When the transmitter F-band RF tuner is used, the indication depends on the setting of the TEST MULT CATH switch (see below).

Opposite "PWR AMPL GRID" position, add: Not used for F-band. In the Position column, opposite "TEST switch" control. Add after the "PWR AMPL GRID" position:

Meter	Control	Position	Normal indication on meter	Significance of normal indication
	TEST MULT CATH switch (for F-brand only) (TEST switch S104 in T–302/TRC in MULT CATH position).	1ST TRIP CATH	14–16 ua	Oscillator working properly.
		DOUB CATH	17–20 ua	Proper drive into doubler cavity.
		MIXER CATH	18–20 ua with 150V DC switch off.	Proper drive from oscillator-multiplier.
			30 ua with 150V DC switch on.	Proper vhf drive from T–302/TRC.
		PA CATH	25–30 ua	Proper excitation from mixer into final amplifier.
		REC XTAL CUR	10 ua	Proper local oscillator injection to reciever mixer crystal.

Opposite "FWD PWR" position. After "higher," add: (A-, B-, C-, or D-band), 10 ua or higher (F-band).

Opposite "REEL PWR" position. After "lower," add (A-, B-, C-, or D-band), 2 or lower (F-band).

Page 148, paragraph 121*b*, chart. Make the following changes: In the Normal indication on meter column:

Opposite 750 LOWER SCALE position. Add: 900 volts for F-band tuner.

Opposite 275 LOWER SCALE position. Add: (A-, B-, C-, or D-band), 350 (F-band).

In the Significance of normal indication column, opposite 275 LOWER SCALE position, add: For Amplifier-Converter AM–2537/TRA–25 low voltage is normal.

Page 153, paragraph 132. Add subparagraph *e* after subparagraph *d*.

e. Four multiple spline wrenches, two Allen wrenches, and a tube puller are furnished with the F-band tuner (fig. 227.4).

Page 172, paragraph 139*b*. Add subparagraph (5) after subparagraph (4).

(5) Alternate lubrication instructions for Amplifier-Converter AM–2537/TRA–25 are given in figure 118.3. Figure 118.4 gives additional lubrication instructions for the CV–932/TRA–25.

Page 177, paragraph 151.2 (page 47 of C 5). Add paragraphs 151.3, 151.4, and 151.5 after paragraph 151.2.

151.3. Removal of Tube V501 (3CX100A5) From Amplifier-Converter AM–2537/TRA–25

(fig. 123.3).

a. Follow the procedures in paragraph 337.4*a*(1) and (2) to gain access to the top of tube V501. To remove it, squeeze the ends of the tube puller together so that they can be fitted into the two holes in the top cooling fin of the tube. Release tension so the ends of the tube puller remain engaged in the holes. Grasp the tube puller at the top and pull out steadily and firmly until the tube is removed from its socket. Compress the ends of the tube puller again to remove it from the tube.

b. To replace the tube, press the tube into the cavity. Follow the procedures in paragraph 337.4*b*(2) and (3) to replace the back cover.

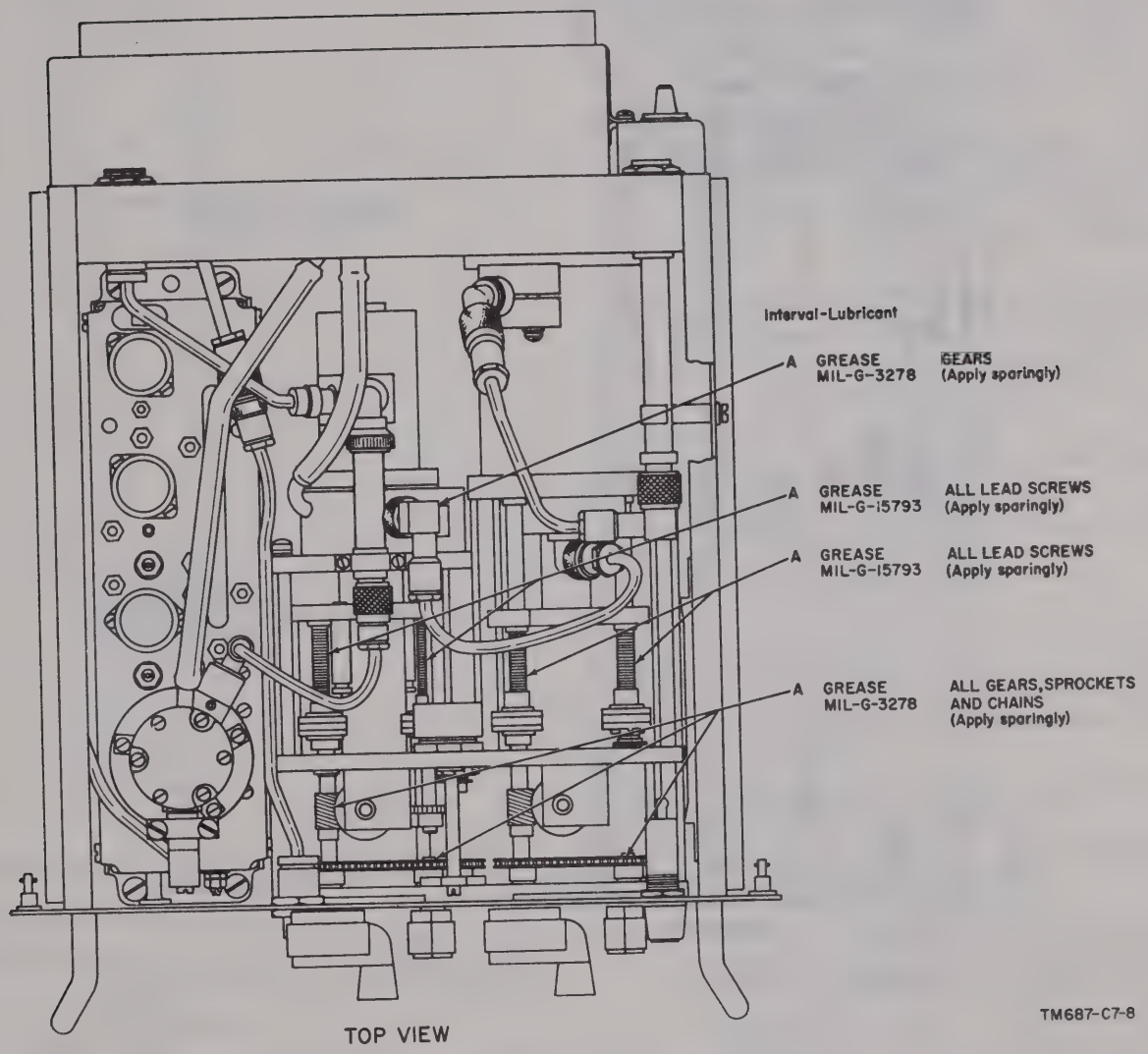

Figure 118.3. (Added) *Lubrication of Amplifier-Converter AM–2537/TRA–25.*

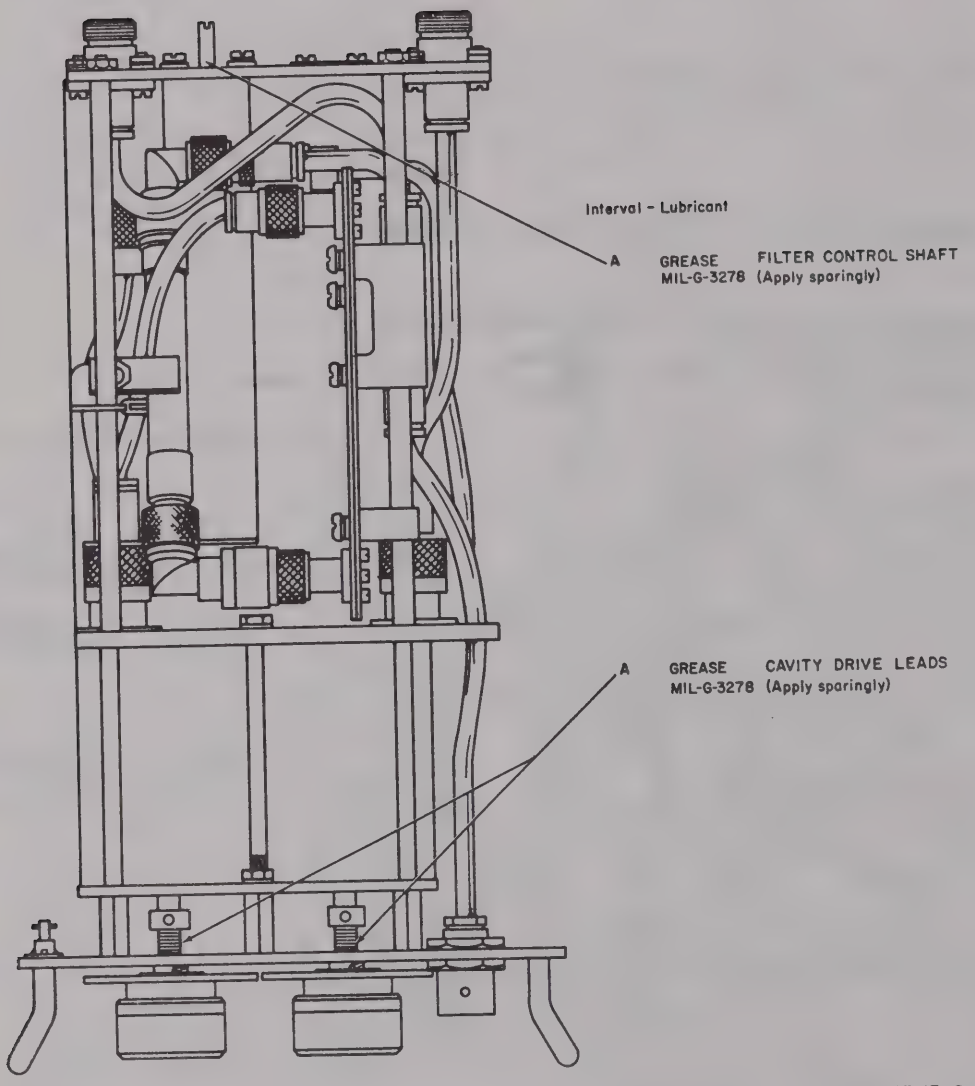

Figure 118.4. (Added) *Lubrication of Mixer Stage, Frequency CV–932/TRA–25.*

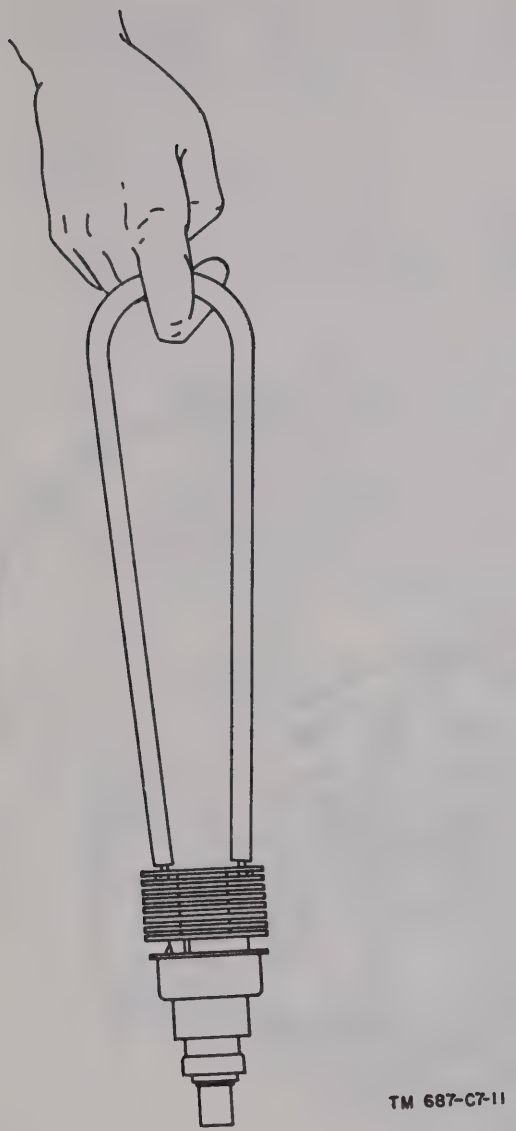

Figure 123.3. (Added) *User of tube puller with 3CX100A5 tube.*

151.4. Removal of Tubes 5876 From Amplifier-Converter AM–2537/TRA–25

(fig. 123.4)

a. Removal of Tube V304.

(1) Remove the airhose (1).

(2) Remove the two RF cable connectors (2).

(3) Loosen the three clamp screws (3), and swing the clamps (4) free.

(4) Pull the cavity head (5) straight up and off the cavity base (8). The cavity head is properly aligned with the cavity base by three guide pins (23), each about 1 inch long.

(5) Tube V304 (6) is now visible in the cavity base (8). Remove the tube by pulling it straight out. The nylon tube guide (7) should come out with the tube.

b. Replacement of Tube V304.

(1) Place the nylon tube guide (7) on the pin end of the tube (6). Be careful not to bend the two tube pins, which should extend through the slot at the end of the tube guide.

(2) Insert the tube (6), pin end first, into the cavity base (8). Aline the tube guide with the slots in the tube-socket fingers (9). Press the tube firmly in place.

(3) Aline the cavity guide pins (23) in the cavity head (5) with the corresponding holes in the cavity base (8) to insure proper mating. Seat the cavity head firmly on the cavity base.

(4) Position the clamps (4) and tighten the clamp screws (3).

(5) Replace the two RF-cable connectors (2).

(6) Replace the airhose (1).

c. Removal of Tube V401.

(1) Loosen the two retaining screws for clamp (10) that secures the high-pass filter (fig. 227–3) across the top of the mixer cavity.

(2) Disconnect the RF connectors (11) at J101 and J103 (fig. 227–3).

(3) Disconnect J102 (12 and fig. 227.3) from the cavity.

(4) Use the long-handled hexagonal wrench (supplied) to remove the two screws (13) that hold the head of the cavity to the cavity base (19). Holes are provided through the back cover and the power chasis terminal board so that they do not have to be removed.

(5) Pull the head of the cavity (14) (see A, rear view of cavity) straight back and off the base (19). The head is held to, and alined with, the base of the cavity by three guide pins (15). These pins form a tight fit and some force is required.

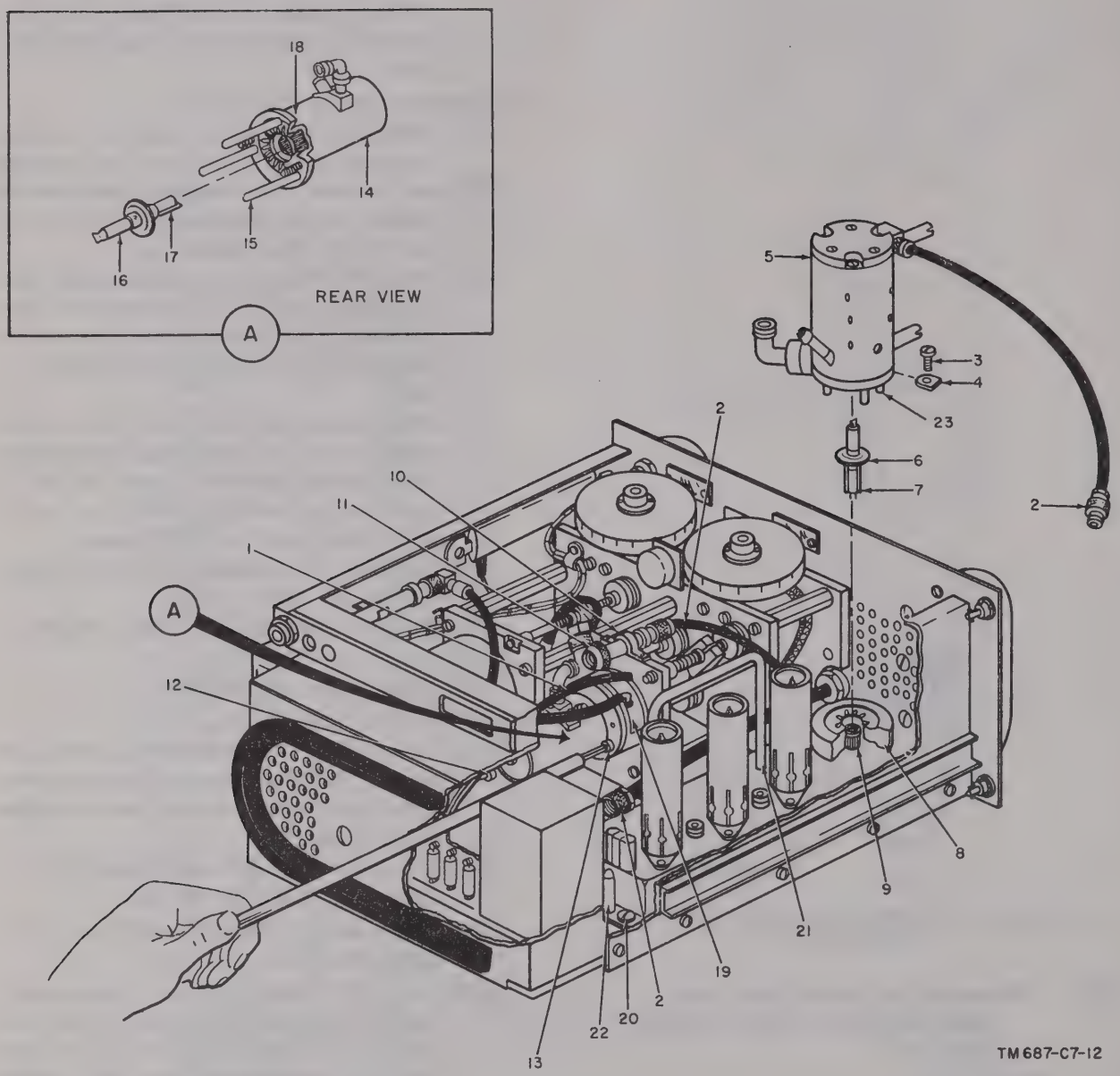

1	Airhose	7	Nylon tube guide	13	Screw	19	Cavity base
2	RF cable connector	8	Cavity base	14	Mixer cavity head	20	Captive lockscrew
3	Clamp screw	9	Tube-socket finger	15	Guide pin	21	Carrying handle
4	Clamp	10	Clamp	16	Tube V401	22	Guide pin
5	Doubler cavity head	11	RF connector	17	Nylon tube guide	23	Guide pin
6	Tube V304	12	J102	18	Slots		

Figure 123.4. (Added) *Removal of pencil triode tubes.*

(6) Tube V401 (16) is mounted in the cavity head (14). Remove the tube by pulling it straight out. The nylon tube guide (17) should come out with the tube.

d. Replacement of tube V401.

(1) Place the nylon tube guide (17) on the tube (16). Be careful not to bend the tube pins, which should extend through the slit in the bottom of the guide.

(2) Insert the tube (16) into the cavity head (14). Aline the tube guide with the slots (18) in the tube socket fingers. Press the tube firmly in place.

(3) Aline the head of the cavity (14) with the base (19) so that the three guide pins (15) are alined with the corresponding holes. Seat the head securely in place.

(4) Tighten the two screws (13) that hold the head to the base.

(5) Replace J102 (12).

(6) Replace the two RF connectors (11) at J101 and J103 (fig. 227.3), and tighten the screws that secure the filter clamp (10).

151.5. F-Band Frequency Mixer, Removal of Diode

(fig. 123.5)

a. Removal.

(1) Loosen the screw (1) in the cable clamp (2) that secures the low-pass filter.

(2) Unscrew and remove the connector (3).

(3) Pull the connector up and away from the mating connector (4) to expose the diode (5).

(4) Pull out the diode.

b. Replacement.

(1) Set the diode (5) in place.

(2) Screw the connector (3) in place on the mating connector (4).

(3) Tighten the screw (1) in the cable clamp (2).

Page 195, paragraph 179 (page 47 of C 5), chart. Make the following changes:

Normal indication column, item No. 30, second entry. Add: The meter reads 900 volts if the F-band tuner is used.

Page 197, paragraph 179 (page 47 of C 5). Normal indication column, item No. 56, second sentence. Change "or B-band" to: **B-band or F-band.**

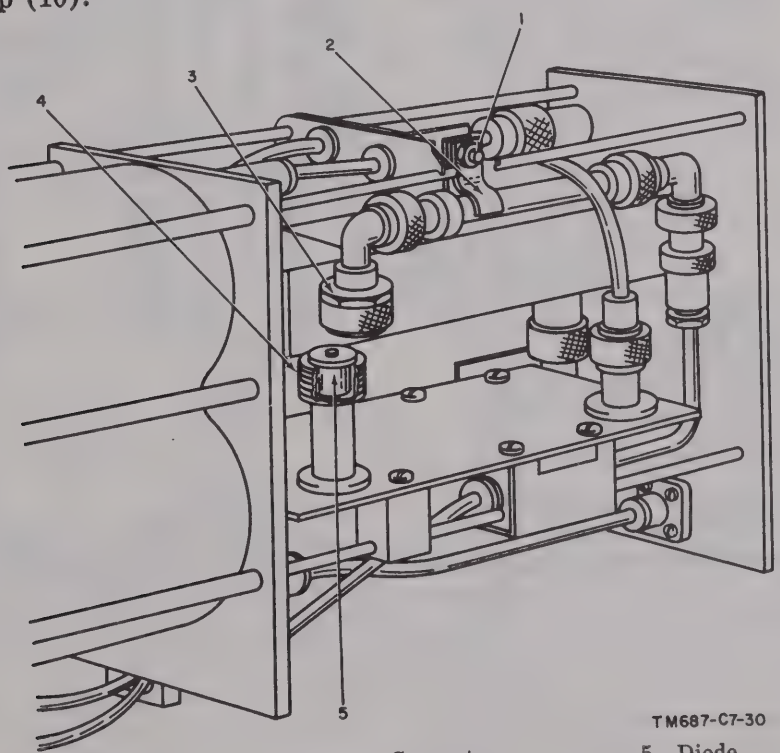

1 Screw
2 Cable clamp
3 Connector
4 Connector
5 Diode

Figure 123.5. (Added) *F-band frequency mixer, removal of diode.*

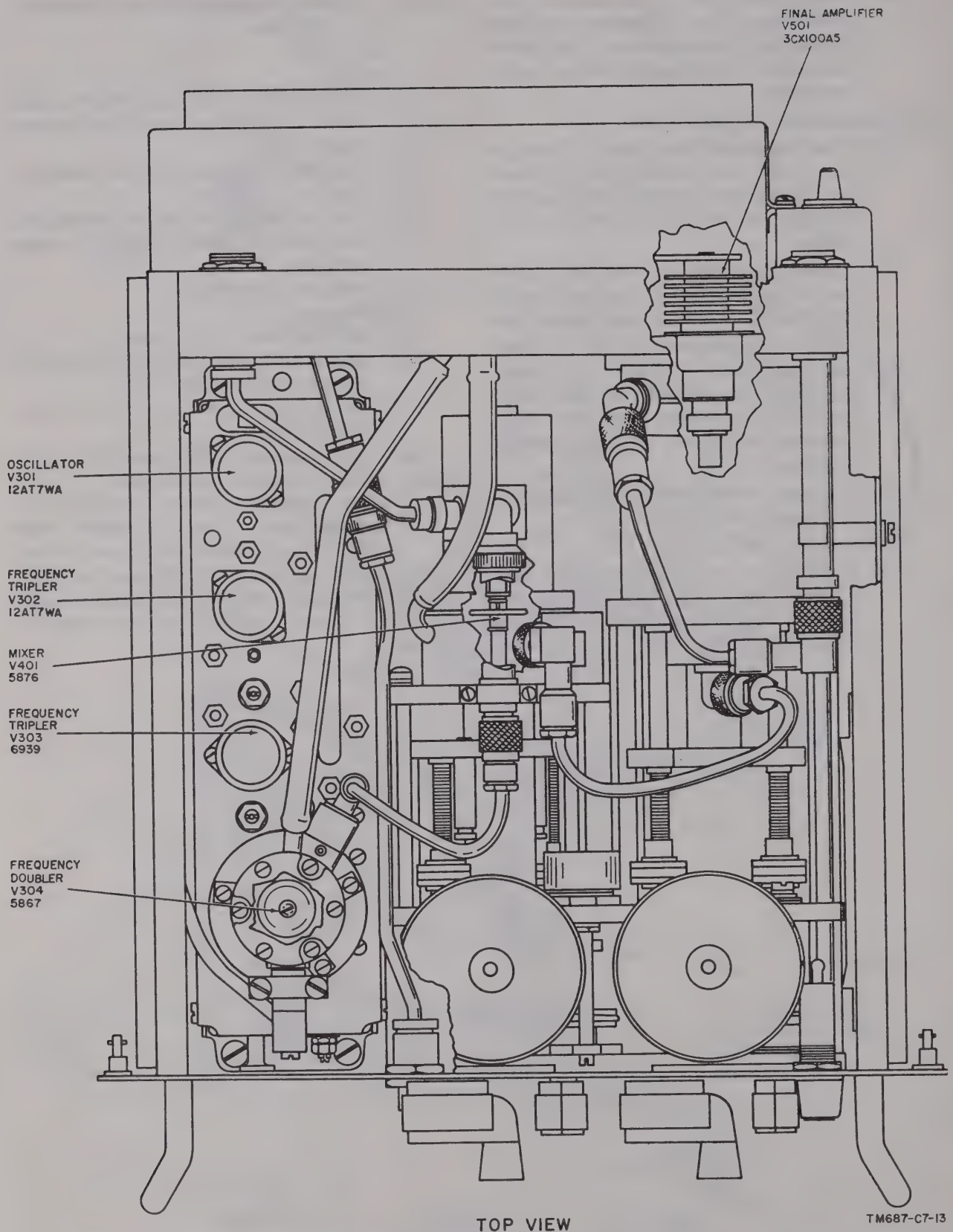

Figure 133.2. (Added) *Amplifier-Converter AM–2537/TRA–25, tube location.*

Page 199, paragraph 179 (page 49 of C 5). Add the fo llowing after item No. 82.12:

Items 82.13 and 82.14 apply when the AM–2537/TRA–25 is used.

Item No.	Item	Action or condition	Normal indication	Corrective measures
82.13	TEST switch S104 (transmitter).	Operated to MULT CATH position.		
82.14	TEST MULT CATH switch S401 (AM–2537/TRA–25).	Operated to 1st TRIP CATH position.	14–16 ua on TEST METER.	Refer to field maintenance.
		Operated to DOUB CATH position.	17–20 ua on TEST METER.	Refer to field maintenance.
		Operated to MIXER CATH position.	18–20 ua with 150V DC switch OFF. 30 ua with 150V DC switch ON.	Refer to field maintenance.
		Operated to PA CATH position.	25–30 ua on TEST METER.	Refer to field maintenance.

Page 202, paragraph 179 (page 49 of C 5 Add the following after item 126.

Item No.	Item	Action or condition	Normal indication	Corrective measures
126.1	TEST switch S104 (transmitter).	Operated to MULT CATH position.		
126.2	TEST MULT CATH switch S401 (AM–2537/TRA–25).	Operated to REC XTAL CUR position.	10 ua on TEST meter------	Refer to field maintenance.

Page 266, paragraph 186*a*, line 3 (page 49 of C 5). After "600" add: and 790 to 965.

Paragraph 186*b*(1) (page 49 of C 5). Make the following changes:

In the fifth sentence, change "or D-band" to: D-band or F-band. In the seventh sentence, after "D-band," add: or F-band. At the end of the eighth sentence, add: When the F-band is used, the output frequency of the driver is added to either 690 mc or 740 mc (depending on the oscillator-multiplier used) and then amplified.

Paragraph 186b(2) (page 50 of C 5). Make the following changes:

Line 2. After "600" add: and 790 to 965.

After the second sentence, add: The range from 790 to 915 megacycles is the F_{lo} band, and the range from 840 to 965 magacycles is the F_{hi} band.

Page 208, figure 136 (contained in separate envelope) (pages 50 and 51 of C 5). Make the following changes:

NOTE 1. Change "or D-BAND" to: D-BAND or F-BAND.

Add note 3 after note 2.

3. ON ORDER NO. 39906–PP–58, FILTER FL101 IS NOT SUPPLIED.

Add the block shown in figure E below the D-BAND RF TUNER shown in figure A:

Page 209, paragraph 193 (page 51 of C 5). In the third sentence, change "or D-band" to: D- or F-band.

Paragraph 194 (pages 51 and 52 of C 5). Make the following changes:

Subparagraph *a*, line 3. Change "and the last, the D-band" to: the fourth, the D-band, and the fifth, the F-band.

Add subparagraph *e* after subparagraph *d*.

e. Transmitter F-band RF Tuner. Amplifier-Converter AM–2537/TRA–25 is the transmitter F-band RF tuner. It is supplied with two interchangeable, plug-in oscillator-multipliers. Oscillator-Multiplier O–734/TRA–25 provides a frequency of 690.5 mc, which permits the transmitter F-band RF tuner to cover the 790- to 915-mc frequency range. Oscillator-Multiplier O–735/TRA–25 provides a frequency of

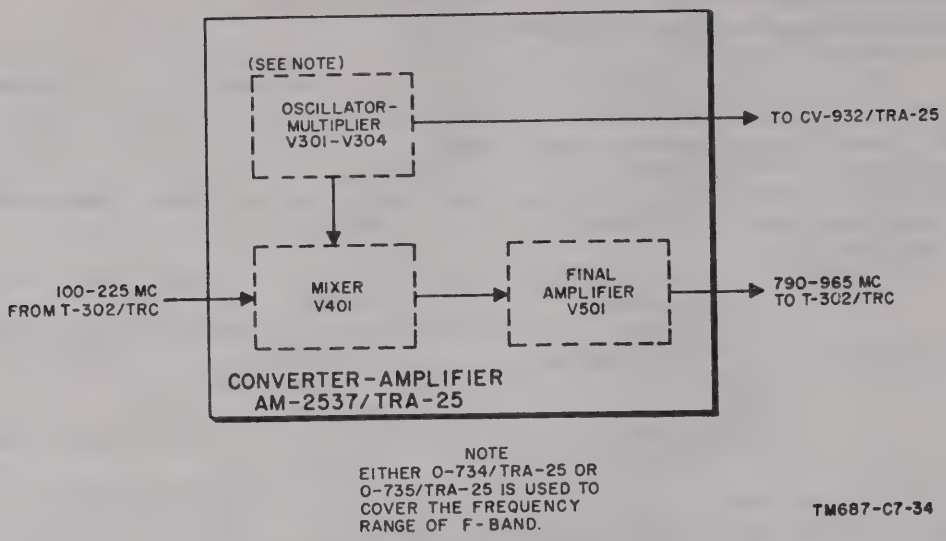

Figure E. Addition to figure 136.

740.5 mc, which permits the transmitter F-band RF tuner to cover the 840- to 965-mc frequency range. One of the oscillator-multiplier outputs, approximately 1 watt, is applied directly to the mixer injection probe for use in transmitter frequency conversion. This output is of fixed frequency and amplitude. The second output, fed to the F-band frequency mixer, is controlled by a front-panel screwdriver adjustment. Mixer stage V401 combines the oscillator-multipler output with the output of the T–302/TRC driver stage (100–225 mc). The mixer stage consists of a pencil triode mounted in a tuned-plate cavity. The mixer cavity is tuned to the sum frequency (between 790 and 965 mc) by the MIXER TUNE control, and the resultant signal is coupled to final amplifier V501, which is also mounted in a tuned-plate cavity. The output of final amplifier V501 is coupled to the antenna. The transmitter F-band RF tuner also includes a power-supply chassis that provides filament power and dc distribution. A detailed description of the transmitter F-band RF tuner is given in paragraph 224-4 through 224.7.

Paragraph 195. After the heading, add the following note:

Note. No band-pass filters are used in F-band operation.

Paragraph 197 (page 52 of C 5). Make the following changes:

Add to heading: (A-, B-, C-, and D-band Operation).

Add paragraph 197.1 after paragraph 197.

197.1. Functioning of Antenna (F-band Operation)

The transmitting antenna is a broadband radiator consisting of folded dipoles stacked four-high vertically and two-wide horizontally. The dipoles are mounted on a plane reflector by a fiberglass cover. The antenna is pretuned at the factory to operate over the 790- to 965-mc frequency band without any readjustments. It is identical with the receiving antenna, and both are horizontally polarized.

Page 214, paragraph 213d(1) (page 52 of C 5). After the second sentence, add: The voltage is normannly adjusted to +900 volts for operation in the F-band.

Page 215, paragraph 214. Make the following changes:

Subparagraph *a,* line 13. Change "filter FL101" to: the transformer.

Subparagraph *b.* At the end of the subparagraph, add: In transmitters procured on Order No. 39906–PP–58, filter FL101 is not supplied. All signals in the frequency range up to 108 kc are passed. Terminal 7 of T101 is connected directly to the "30" end of R101.

Page 216, figure 138. Add note 3 after note 2.

3. ON ORDER NO. 39906–PP–58, FILTER FL101 IS NOT SUPPLIED. TERMINAL 7 OF T101 IS CONNECTED TO THE "30" END OF R101.

Page 224, paragraph 220 (page 52 of C 5),

first sentence line 2. Change "or D-band" to: D- or F-band.

Page 226, paragraph 220*d* (pages 52 and 53 of C 5). Make the following changes:

Add after the second sentence: The voltage is normally adjusted to +900 volts for the F-bands.

Add after the last sentence: When the F-band RF tuner is in place, the input to the oscillator-multiplier is multiplied 18 times by two triplers and a doubler (pars. 224.4–224.8). Switch S103 is not closed when the F-band RF tuner is used; the higher level of screen grid voltage is required for driving the RF tuner.

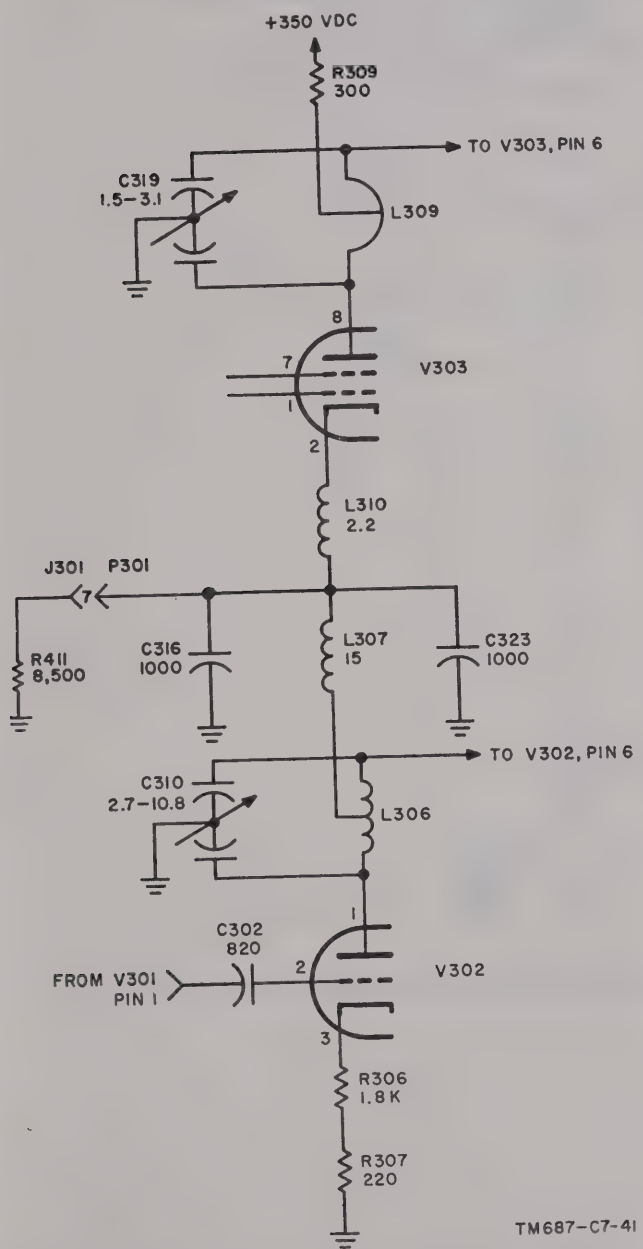

Figure 144.3. (Added) *Oscillator-multiplier, simplified dc circuit.*

Figure 144 (page 53 of C 5), Note 3: Change "AND D-BAND" to: D-BAND AND F-BAND

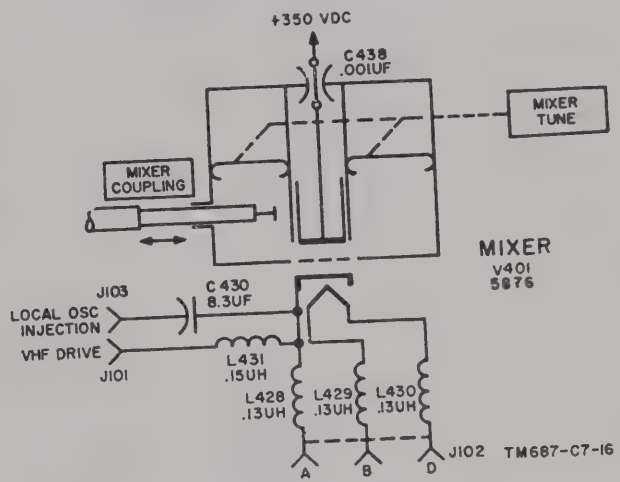

Figure 144.4. (Added) *Amplifier-Converter AM–2537/TRA–25, mixer, schematic diagram.*

Page 232, paragraph 224.3 (page 57 of C 5). Add paragraphs 224.4, 224.5, 224.6, 224.7, and 224.8 after paragraph 224.3.

224.4. Transmitter F-band RF Tuner (fig. 279.2)

The transmitter F-band RF tuner operates over a frequency range of 790 to 965 mc. It consists of an oscillator-multiplier plug-in subchassis (O–734/TRA–25 for the F_{lo} band or O–735/TRA–25 for the F_{hi} band), a mixer stage, a final-amplifier stage, and a power-supply chassis. The output stage of the oscillator-multiplier, the mixer, and the final amplifier are tunable cavities with adjustable output probes. The oscillator-multiplier provides injection signals for the mixer cavity and for the F-band frequency mixer used in conjunction with the receiver B-band RF tuner.

224.5. Oscillator-Multipliers (fig. 144.2)

a. The F_{lo}-band and the F_{hi}-band oscillator-multipliers are schematically identical. The only components which differ in value are the crystal, and coils L301, L309, and L313. The doubler cavity for the low band is slightly modified to permit the cavity to resonate at the

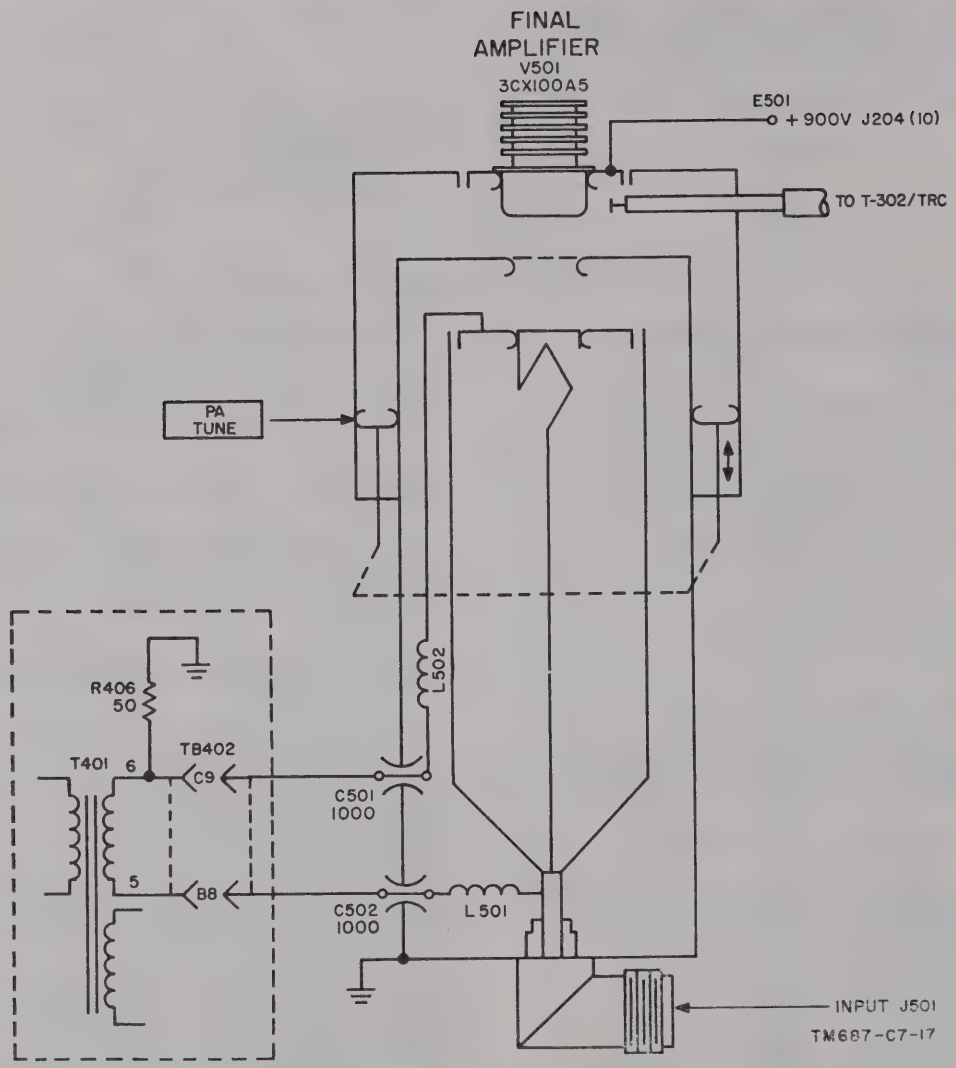

Figure 144.5. (Added) *Amplifier-Converter AM–2537/TRA–25, final amplifier, schematic diagram.*

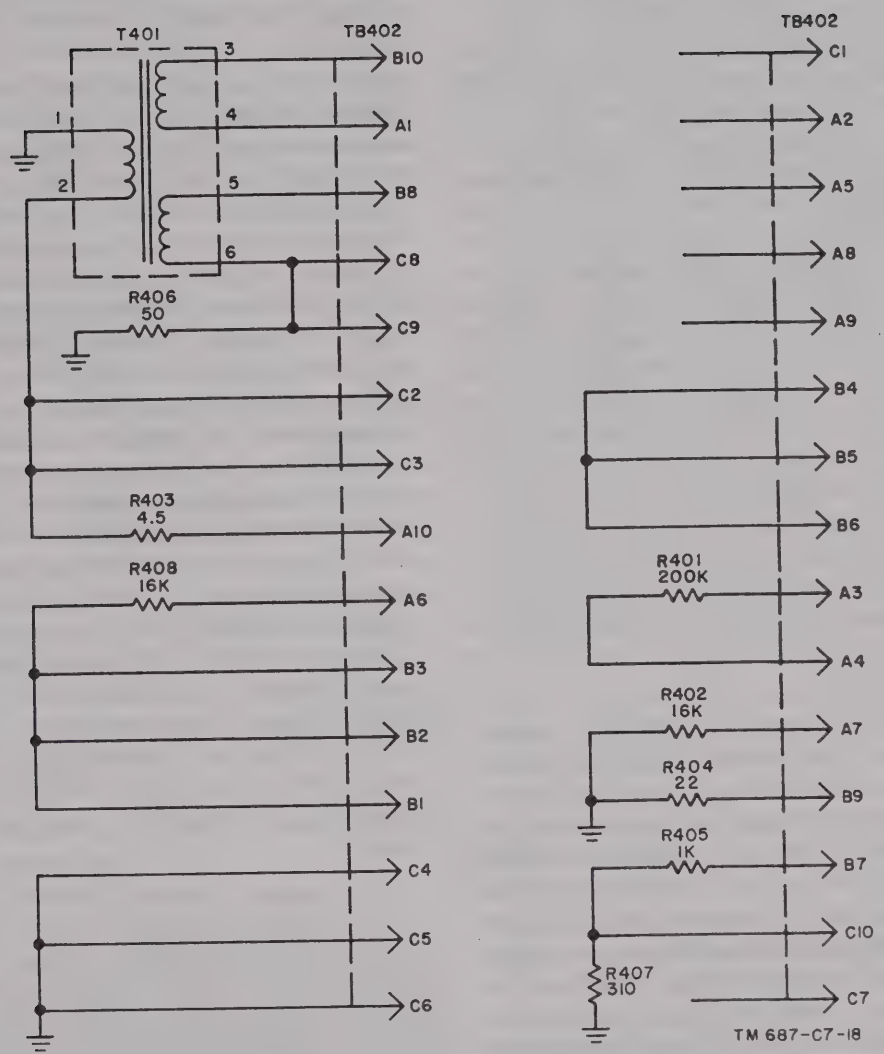

Figure 144.6. (Added) *Converter-Amplifier AM–2537/TRA–25, power supply chassis.*

lower frequency. All reference symbols are identical and only the F_{10}-band oscillator-multiplier is discussed below.

b. The oscillator-multiplier consists of four stages: oscillator V301, first tripler V302, second tripler V303, and doubler V304.

c. Oscillator V301 is a push-pull, crystal-controlled, modified Miller oscillator. Crystal Y301 is operated near the series-resonant point, and the output tank circuit (L301 and C301) is tuned above the resonant frequency to serve as an inductive load. Feedback is supplied through the interelectrode capacitance of the tube. The inductively tuned plate circuit causes plate current to lag approximately 90°, while feedback through the tube causes a 90° lead. The feedback is, therefore, in phase. Push-pull operation is used to increase power output of the oscillator. Coils L302 and L303 are RF chokes used with capacitor C307 to decouple the plate leads from the B+ supply. Capacitors C302 and C303 block power-supply dc from the grid circuit of directly coupled V302. Resistor R302 provides a dc grid return for the grids of tube V302 through the center tap of coil L301. Capacitors C304 and C306, which have negative temperature coefficients, act as frequency stabilizers for the tank circuit. Two output signals, 180° out of phase, are directly coupled from the ends of the balanced plate tank circuit to the grids of tube V302.

d. Frequency triplers V302 and V303 are dc series connected (fig. 144.3) to insure a small current drain on the power supply. Tube V303 requires a cathode-to-plate voltage of about 80 volts and tube V302 requires a plate-to-cathode voltage of about 260 volts. Three hundred and fifty volts dc is applied through pin 1 of connector P301, decoupling feed-through capacitor C321 (fig. 144.2), and resistor R309 to the center tap of coil L309, and then, through the coil, to the plates of tube V303. The cathode of tube V303 is connected, through coils L310, L307, and L306, to the plates of tube V302. From the junction of L310 and L307, a connection is made through P301 and J301 to R411 to ground. Resistor R411 is in parallel with V302. The combined current of R411 and V302 flows through V303 to provide proper operating voltages and currents for both tubes. The cathode of tube V302 returns to ground through resistors R306 and R307. Tubes V302 and V303 use push-pull operation to cancel even harmonics and increase power output.

e. First tripler V302 operates near class B (due to cathode current), and the input signal drives the tube to cutoff, making the output rich in harmonics. The plate tank circuit (L306 and C310) is tuned to resonate at the third harmonic by adjustment of capacitor C310. Neutralizing capacitors C311 and C312 provide out-of-phase feedback to prevent the circuit from oscillating. The two resistors in the cathode circuit provide both cathode bias and a voltage divider for metering. The voltage developed across resistor R307 is proportional to the current through the tube. The resulting meter reading is used to tune the oscillator and the first tripler. The two output signals, 180° out of phase, at the ends of the balanced tank circuit, are coupled through capacitors C313 and C314 to the grid of second tripler V303, which also operates near class B. The output of V303, rich in odd harmonics because of the push-pull arrangement, is tuned to the third harmonic. Coil L309 ,a single loop of wire, forms a tank circuit with tuning capacitor C319. Because the tubes are connected in series, the tuning of either tube affects the other. The grids of V303 are returned to B+ through coils L312 and L308 and resistor R308 to provide proper bias (the cathode of V303 is approximately +150 volts (*d* above)). Capacitor C325 decouples the grid B+ line. The output signal is transformer-coupled from coil L309 to L313. Coil L309 is a single loop of wire, and coil L313 is a double loop. Both loops are wound around a single core.

f. Frequency doubler V304 is a pencil triode housed in a tuned-plate cavity. The tube operates as a grounded-grid amplifier, and the input signal is developed from cathode to ground across a series-resonant circuit made up of coil L313 and capacitor C326. Capacitor C326 is used to tune the circuit to the proper frequency. The output cavity is tuned to the second harmonic by a capacitance probe controlled by the OSC TUNE control on the front panel. The OSC OUTPUT control, R313, controls the output power by adjusting the current through the tube. The voltage developed across resistor R314 in the cathode voltage divider line is used in metering. A second output it taken from the cavity by the REC OSC INJ loop, which is in

fixed position in the cavity. This output is fed to the CV–932/TRA–5 and is adjusted by rotating the loop in the electromagnetic field.

224.6. Transmitter F-band RF Tuner, Mixer
(fig. 144.4 and 227.3)

a. Mixer stage V401, a pencil triode housed in a tunable cavity, mixes the signal from the oscillator-multiplier with the signal from the driver stage of the T–302/TRC.

b. The VHF signal from the driver (100 to 225 mc) is applied from connector P201, through a coaxial cable, to connector J101 on the cavity. The signal from the oscillator-multiplier (690.5 for the F_{lo} band or 740.5 mc for the F_{hi} band) is applied from V304, through a coaxial cable and a high-pass filter (fig. 227.3), to J103 on the mixer cavity. The high-pass filter and the coil and capacitor on the signal input leads are designed to prevent unwanted signal feedback to the signal generating stages. The two signals are applied to the cathode of tube V401 and developed across coil L428, a VHF choke. The plate-to-grid cavity is tuned to the desired sum frequency, between 790 and 965 mc, by the MIXER TUNE control. Coils L429 and L430 are UHF chokes which block 700- to 900-mc signals from the filament circuit. The output probe is geared to a shaft and is adjusted by the MIXER COUPLING control. The output is coupled through a coaxial cable to J501 of the final amplifier.

224.7. Transmitter F-band RF Tuner, Final Amplifier
(fig. 144.5)

The final amplifier is a grounded-grid triode mounted on a tuned-plate cavity. Input from the mixer output probe is matched directly to the final amplifier cathode by adjustable capacitive coupling control, MIXER COUPLING (fig. 144.4). Filament current is fed directly into the cavity and is isolated from the signal by internal chokes L501 and L502. The output probe coupling adjustment is factory-fixed to provide a minimum of 10 watts RF output. The cavity size is adjusted by the PA TUNE control. The output signal (between 790 and 965 mc) is fed through a 1,000-mc low-pass filter, the AN/TRC–24 dummy filter, and a directional coupler to the antenna.

224.8. Transmitter F-band RF Tuner, Power Supply Chassis
(fig. 144.6 and 279.2)

a. The power-supply chassis ((3), fig. 263.2) houses the circuits required for voltage distribution and filament isolation. The B+ voltage supplied by Power Supply PP–685/TRC (through J204–1) is applied at the full 900-volt magnitude to final amplifier V501. At the same time, it is connected through resistors R410 and R408, potentiometer R409, and resistor R402 to ground. The 350-volt circuit is fused at the transmitter F-Band RF tuner front panel.

b. Nine hundred volts dc is applied at terminal 1 of J204; 350 volts dc at terminal 13 of J204, and 6.3 volts ac at terminal 3 of J204. The 900-volt input is applied through terminals 11 and 10 of J204 to the plate of final amplifier V501. The same voltage is dropped to 350 volts dc by resistor R410 and applied as B+ to tubes V301 through V304 and to V401. The 350 volts is divided across the series combination of V302 and V303 (par. 224.5*d*). The 6.3-volt ac filament supply for tubes V301 and V302 is applied through terminal 4 of J301 to the filament circuit and is returned to ground. Chokes L305 and L304 and capacitors C309 and C305 form an RF filter. The 6.3-volt ac filament voltage for tube V303 is supplied by secondary winding 3–4 of T401 through pins 2 and 3 of J301. Choke L311 and capacitors C320 and C324 form an RF filter. Filament voltage for tube V304 is applied through pin 4 of J301 and P301 and is dropped to 5.8 volts by resistor R315. Chokes L314 and L315 and feed-through capacitor C328 form an RF filter. The return is to ground. The filament voltage for V401 is dropped to 5.8 volts by resistor R403 and is applied to the filament through TB402-A10 and RF choke L430. The return is to ground through RF choke L429 and TB402–C5. The 6.3-volt ac filament supply for tube V501 is taken from secondary winding 5–6 of T401 and applied to the filament circuit through the RF filter combination of feed-through capacitor C502 and choke L501. The return is through choke L502 and feed-through capacitor C501.

Page 237, paragraph 227*b* (page 62 of C 5). Add subparagraph *c* after subparagraph *b*.

c. F-band. The F-band antenna assembly consists of two identical antennas. One is used for transmission and the other for reception. The

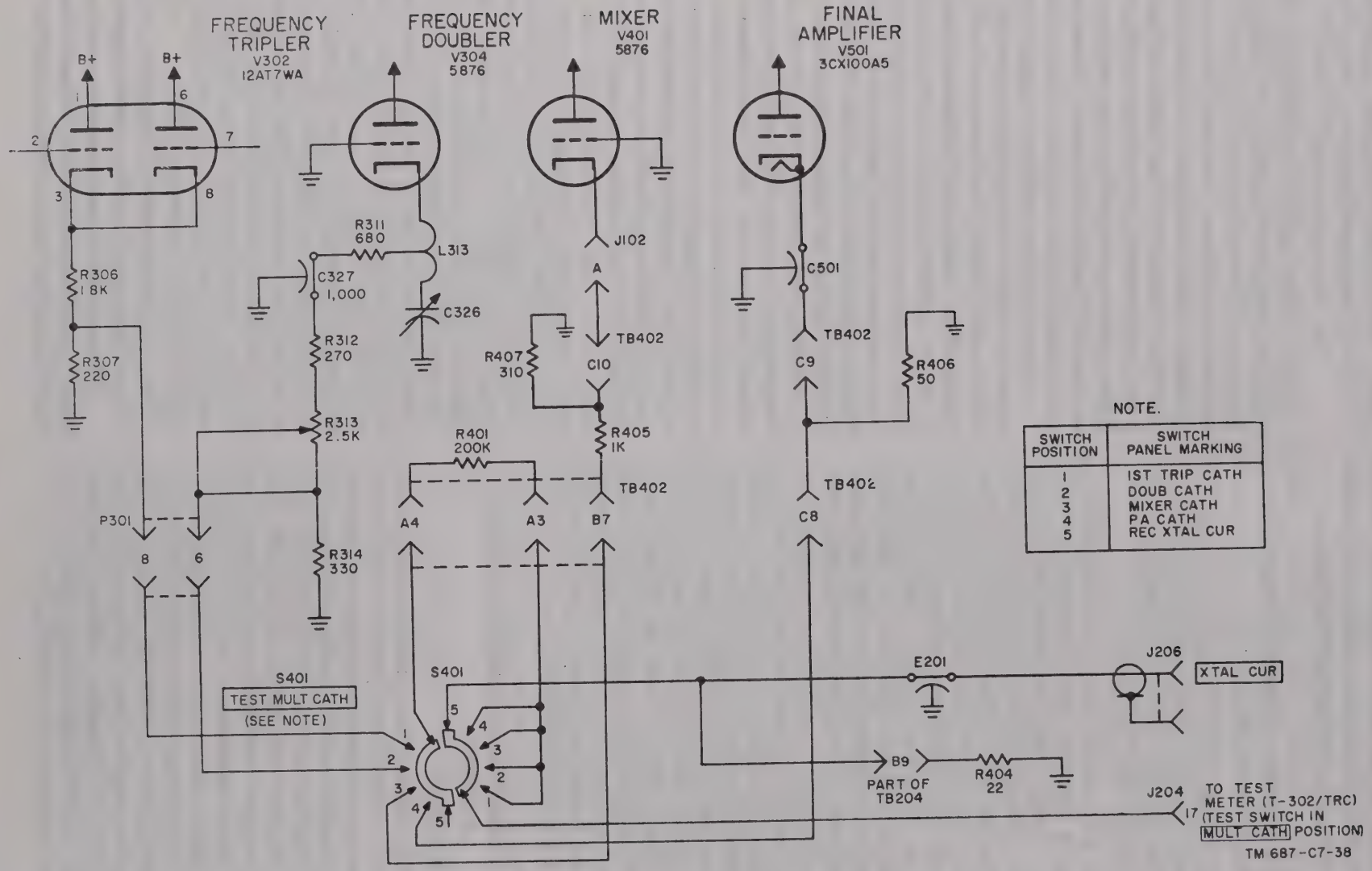

Figure 170.1. (Added) *TEST meter circuit (F-band).*

antennas are designed to be mounted for horizontal polarization. They are factory-pretuned to operate over the 790- to 965-mc F-band without readjustments.

Page 262, paragraph 245*a*. Add after the last sentence: Both the receiving and the transmitting F-band circuits can be monitored in conjunction with switch S401 on the front panel of the transmitter F-band RF tuner (fig. 170.1, par. 121*b*).

Page 264, figure 170 (page 63 of C 5). Make the following changes:

NOTE 2. CHANGE "OTHER THREE" to: OTHERS.

Page 271, figure 172 (page 63 of C 5). Make the following changes:

Change "IN B-BAND, C-BAND, OR D-BAND TRANSMITTER TUNER" to: IN B-BAND, C-BAND, D-BAND, OR F-BAND TRANSMITTER TUNER.

Add the following to the notes:

3. IN THE F-BAND TUNER R3 IS R408, 16K; R1 IS R402, 16K ; R2 IS R409, 25K, AND IS MARKED 350V; P2 IS J204.

Page 274, paragraph 255 (page 64 of C 5). Make the following changes:

Subparagraph *a,* line 8. After "AM-913/TRC," add: Amplifier-Converter AM–913/TRC with Mixer Stage, Frequency CV–932/TRA–25, used with Antenna Assembly AS–1082/TRA–5.

Subparagraph *b* (page 64 of C 5). After the second sentence, add:

When the receiver is equipped with the B-band RF tuner and Mixer Stage, Frequency CV–932/TRA–25, it is tunable from 790 to 695 mc.

Figure 174 (page 64 of C 5). Make the following changes:

NOTE 3. Add the following to the note: FOR THE F-BAND, THE B-BAND RF TUNER IS USED WITH MIXER STAGE, FREQUENCY CV–932/TRA–25 IN PLACE OF THE BAND-PASS FILTER.

Add the block shown in figure G to the blocks in figure D:

Paragraph 257. Make the following changes:

At the end of subparagraph *a,* add: The tuner is used with Mixer Stage, Frequency CV–932/TRA–35 for F-band (790–965 mc) operation (*e* below).

Add subparagraph *e* after subparagraph *d.*

e. Mixer Stage, Frequency CV–932/TRA–25 (figs. 175.1, 248.4, and G).

(1) *General.* Mixer Stage, Frequency CV–932/TRA–35, the receiver F-band frequency mixer, operates in the 790- to 965-mc frequency range. It is used in conjunction with Amplifier-Converter AM–913/TRC and converts the R–417/TRC to a double-conversion superheterodyne receiver. The unit receives signals from the antenna and from the oscillator-multiplier (O–734/TRA–25 or O–735/TRA–25) in the transmitter F-band RF tuner. The two signals are mixed and the difference frequency (100 to 225 mc) is fed to the AM–913/TRC. The unit consists of a passive preselector, a crystal mixer diode, and associated UHF plumbing.

(2) *Preselectors.* UHF signals from the antenna are coupled to the preselector, which consists of two tunable high-Q cavities in cascade. The preselector improves the noise figure and image rejection characteristics. The output is coupled to the crystal diode.

(3) *Band-pass filter.* The heterodyne injection signal from the oscillator-multiplier is coupled to band-pass filter FL601. The filter is a tuned cavity designed to pass only the injection signal. The tuning control, LO FIL TUN, is located at the rear of the chassis. The output is coupled through a directional coupler to the diode mixer.

(4) *Mixer diode.* The mixer diode is the nonlinear element that mixes the two signals. The resultant difference frequency is fed to the low-pass filter.

(5) *Low-pass filter.* Low-pass filter FL602 passes the difference frequency (between 100 and 225 mc) to the AM–913/TRC and to the dc return filter.

(6) *Dc return assembly.* This assembly passes dc, and prevents RF from en-

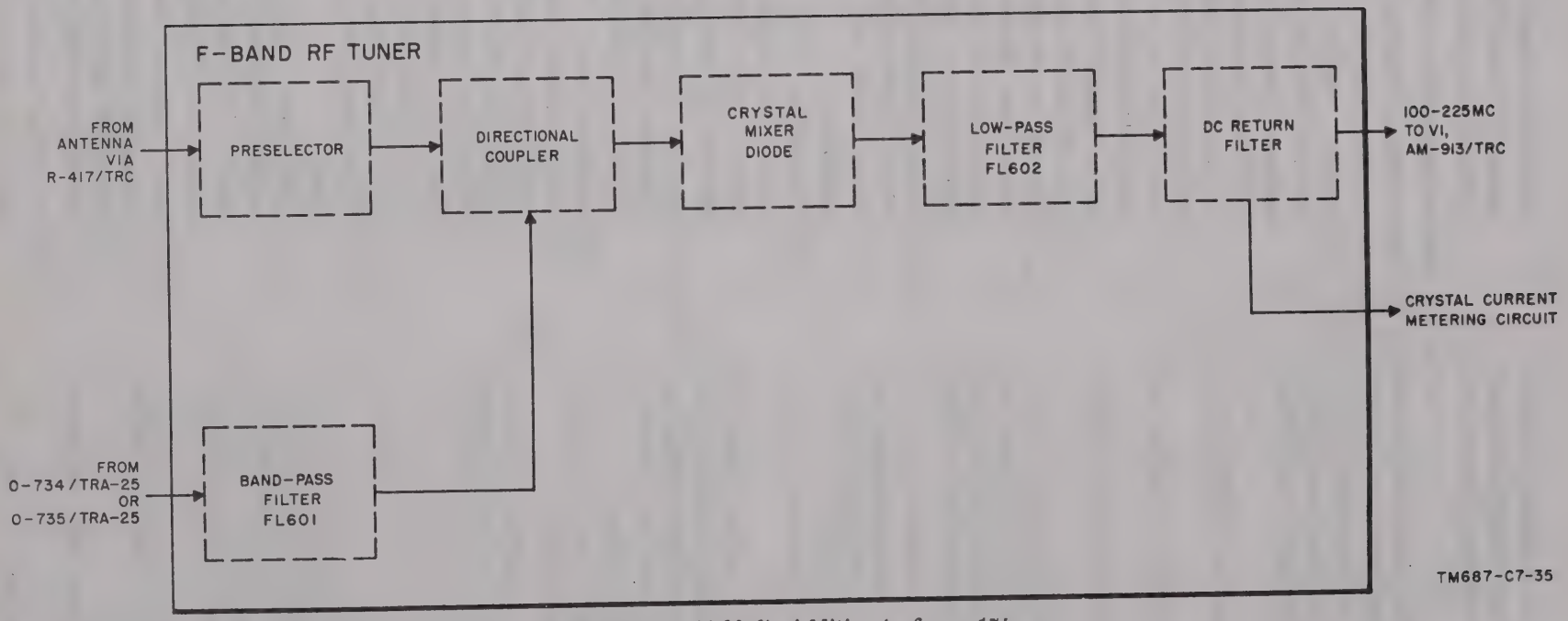

Figure G. (Added) *Addition to figure 174.*

tering the XTAL CUR line to the metering circuit.

Page 277, paragraph 270b (page 65 of C 5). Add the following after the third sentence: In the F-band antenna assembly, each antenna consists of folded dipoles stacked four-high vertically and two-wide horizontally. Both antennas are designed for horizontal polarization. The F-band antenna assembly is used for the 790- to 965-mc F-band range.

Paragraph 271*a* (page 65 of C 5). After the first sentence, add: None are used in F-band operation.

Page 278, paragraph 274. Add paragraph 274.1 after paragraph 274:

274.1. Receiver F-Band Frequency Mixer (Receiver B-Band RF Tuner with Mixer Stage, Frequency CV–932/TRA–25)

(figs. 175.1 and 248.4)

For F-band operation, the F-band frequency mixer is used with the receiver B-band RF tuner. The F-band frequency mixer physically replaces the band-pass filter in the receiver cabinet.

a. The incoming RF signal from the antenna, applied at J606, is fed through coaxial cable to J603 and inductively coupled to the first preselector cavity. The cavity acts as a high-Q resonant tank circuit. It is tuned from the front panel by the antenna HIGH-LOW tuning dial. The signal is inductively coupled to the second cavity, which has the same characteristics. This cavity is also tuned from the front panel by the mixer HIGH-LOW tuning dial. The preselector attenuates unwanted frequencies 200-mc away (image frequencies and second harmonics) by 60 db. It has a band pass of approximately 12 mc. The output is inductively coupled to a coaxial cable and then to the crystal diode.

b. Incoming local oscillator signals from the oscillator-multiplier are applied at front panel REC OSC jack J601. The signal is fed, via coaxial cable, to band-pass filter FL601. The filter, a single reentrant cavity with fixed inductive input and output probes, is tunable from 685 mc to 745 mc. A screwdriver tuning control (LO FIL TUN, fig. 95.2) is accessible from the rear of the unit. The tuning control is a shaft protruding into the single cavity. The shaft is adjusted so that its length is equal to a quarter wavelength of the desired resonant frequency. The output signal is coupled through coaxial cable to the directional coupler at J608.

c. The directional coupler is a printed circuit of two parallel conducting paths laminated between two composition boards. The main signal path from the preselector is from J607 to J609. The local oscillator signal path through filter FL601 is from J608, through the other conductor, to R601. Resistor R601 is a disk-type resistor permanently clamped beneath the board by a round metal holder. The two parallel paths are a quarter wavelength long at 715 mc. The two signals are coupled from one line to the other as they travel down the parallel lines. Since the lines are a quarter wavelength long, any signal at the entrance point reflected towards the preselector will be canceled by the signal that traveled the full length of the coupler and back along the main path. This latter signal has traveled a half wavelength and is thus 180° out of phase with the original signal. The result is maximum signal traveling towards the diode and minimum signal traveling back to the preselector. Resistor R601 represents a matched load impedance and thus prevents any reflection. The local oscillator signal is at least 10 db above that of the desired signal. The desired signal is only attenuated about 0.4 db by the coupler. The two signals mix in the mixer diode. The output is applied to low-pass filter FL602. The filter is a four-section coaxial type built into a rigid line about 4 inches long. The filter is designed to reject all frequencies above 400 mc. This minimizes any spurious responses in the receiver. The 100- to 225-mc frequency ranges on the output end are coupled, through a coaxial cable, to the dr return assembly. The dc return assembly is a sealed unit that consists of a feed-through capacitor, an RF choke, and three coaxial connections. The main signal path enters the assembly at one connection, is directly connected to another coaxial line, and applied to output pack J605 at the rear of the unit. The other path is decoupled from the main signal path by the choke and capacitor, leaving only the resultant dc from the mixer diode in this path. This dc current is applied via coaxial cable to XTAL CUR jack J602 on the front panel for metering.

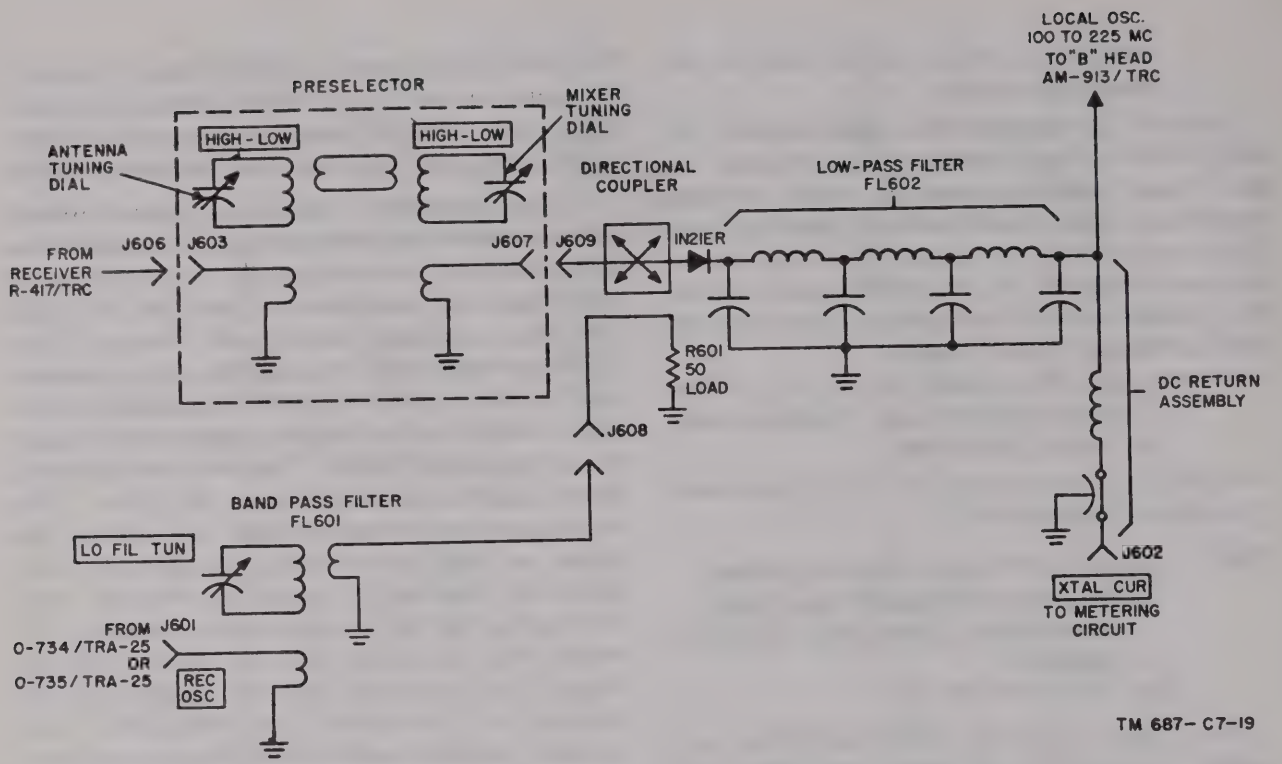

Figure 175.1. (Added) *Mixer Stage, Frequency CV-932/TRA-25, schematic diagram.*

Page 301, figure 186 (contained in separate envelope). Add the following note to the figure:

NOTE:
ON ORDER NO. 39906-PP-58, FILTER FL101 IS NOT SUPPLIED.

Page 317, paragraph 315. Add paragraph 315.1 after 315.

315.1 Troubleshooting Chart, Transmitter F-Band RF Tuner

Note. All readings taken with TEST switch S104 in the T-302/TRC set in the MULT CATH position.

Symptom	Problable trouble	Correction
1. TEST meter reads low with TEST MULT CASH switch is 1ST TRIP CATH position.	C301 mistuned	Return C301 (par. 356.2*a*).
	Oscillator or first tripler tube defective	Replace V301 or V302.
		Check components in V301 and V302 stages.
2. TEST meter reads low in DOUB CATH position.	C310, C319, or C326 mistuned	Retune C310, C319, or 3C26 (par. 356.2*a*).
	First tripler tube, second tripler tube, or doubler tube defective.	Replace V302, V303, or V304.
3. TEST meter reads low in MIXER CATH position.	Driver tube in T-302/TRC defective	Turn off 150V DC switch. If TEST meter reads above 16 ua, replace 4X150A driver tube.
	Doubler tube or mixer tube defective	Turn off 150V DC switch. If TEST meter reads below 14 ua, replace V304 or V401 (par. 151.4).
4. TEST meter reads low in PA CATH position.	Mixer or final amplifier tube defective.	Turn off 150V DC switch. If TEST meter reads below 20 ua, replace V501. If it reads above 20 ua replace V401.
5. TEST meter reads low in REC XTAL CUR position.	Crystal mixer diode is defective	Replace mixer crystal CR601.

Symptom	Probable trouble	Correction
6. Low power output	Unit mistuned	Rerun complete tuneup procedure (par. 105*b*(2)).
	T–302/TRC not operating properly	See troubleshooting chart for T–302/TRC (par. 315).
	Final tube defective	If symptoms 1 through 5 do not appear, change V501 (par. 151.3).

Page 319, paragraph 316. Add paragraph 316.1 after paragraph 316.

316.1. Troubleshooting F-Band Frequency Mixer

Symptom	Probable trouble	Correction
No signal received	R–417/TRC defective	See troubleshooting chart for R–417/TRC (par. 316).
	Unit mistuned	Rerun complete tuneup procedure (par. 110.2).
	Mixer crystal defective	See symptom 5 (par. 315.1).

Page 340, paragraph 320*b*, fourth item in Vtvm connection column, after "FL101," add: (In sets procured on Order No. 39906–PP–58, filter FL101 is not supplied; this step is not necessary.)

Page 356, figure 219. Add the following note:

NOTE:
IN SETS PROCURED ON ORDER NO. 39906–PP–58, FILTER FL101 IS NOT SUPPLIED.

Page 391, paragraph 334. Add the following caution below the paragraph heading:

Caution: **Do not attempt to remove or repair butterfly capacitor assembly Z2 (fig. 247).**

Page 400, paragraph 339.1 (page 87 of C 5). Add paragraph 339.2, 339.3, 339.4, 339.5, 339.6, 339.7, and 339.8 after paragraph 339.1.

339.2. Disassembly, Lubrication, and Reassembly of Amplifier-Converter AM–2537/TRA–25

a. General. Disassembly is not required for lubrication. Refer to figure 118.3 for lubrication instructions.

b. Disassembly and Reassembly. Removal and replacement of transmitter F-band RF tuner components are covered in paragraphs 339.3 through 339.8. Disassembly is not required for replacement of electrical parts because all components are accessible when the oscillator-multiplier has been removed from the transmitter F-band RF tuner.

339.3. Removal and Replacement of Oscillator-Multiplier

(fig. 123.4)

a. To remove the oscillator-multiplier, proceed as follows:

(1) Disconnect the airhose (1) from the doubler cavity head (5).

(2) Disconnect the RF cables (2).

(3) Loosen the four captive lockscrews (20). There are two at each end of the unit.

(4) Grasp the carrying handle (21), and lift the unit up and out.

b. To replace the oscillator-multiplier, proceed as follows:

(1) Aline the unit properly over the two guide pins (22) in the transmitter F-band RF tuner, and seat it firmly in place. Be sure that the plug on the bottom of the unit is securely in place.

(2) Lock the four captive lockscrews (20).

(3) Connect the RF cables (2).

(4 Connect the airhose (1) to the doubler cavity head (5).

339.4. Removal and Replacement of Power-Supply Chassis

(fig. 263.2)

Disassembly is not required for electrical parts because all components are accessible

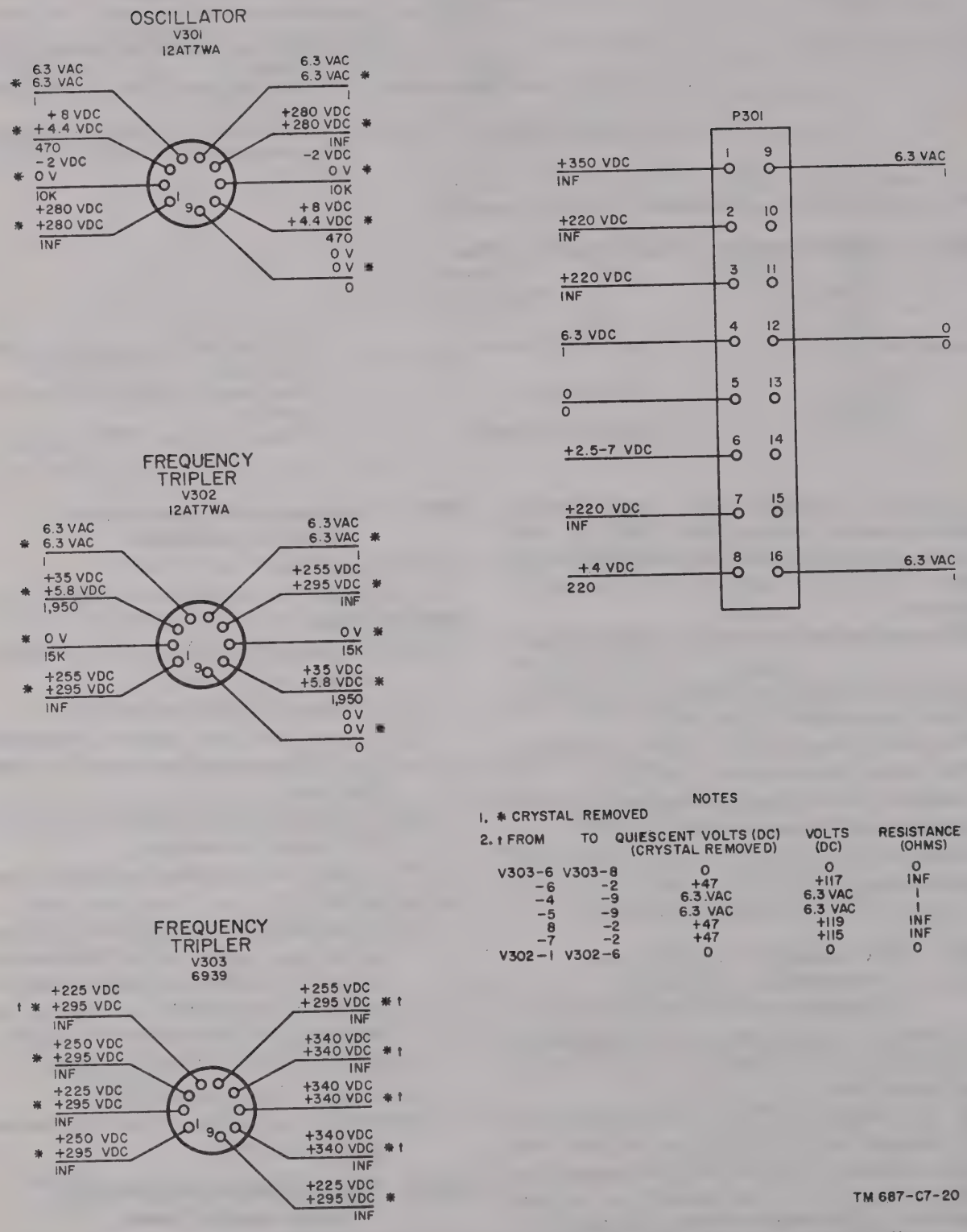

NOTES

1. * CRYSTAL REMOVED
2. † FROM TO QUIESCENT VOLTS (DC) (CRYSTAL REMOVED) VOLTS (DC) RESISTANCE (OHMS)

FROM	TO	QUIESCENT VOLTS (DC) (CRYSTAL REMOVED)	VOLTS (DC)	RESISTANCE (OHMS)
V303-6	V303-8	0	0	0
-6	-2	+47	+117	INF
-4	-9	6.3 VAC	6.3 VAC	1
-5	-9	6.3 VAC	6.3 VAC	1
8	-2	+47	+119	INF
-7	-2	+47	+115	INF
V302-1	V302-6	0	0	0

Figure 198.2. Oscillator-Multipliers O-734/TRA-25 and O-735/TRA-25, voltage and resistance diagram.

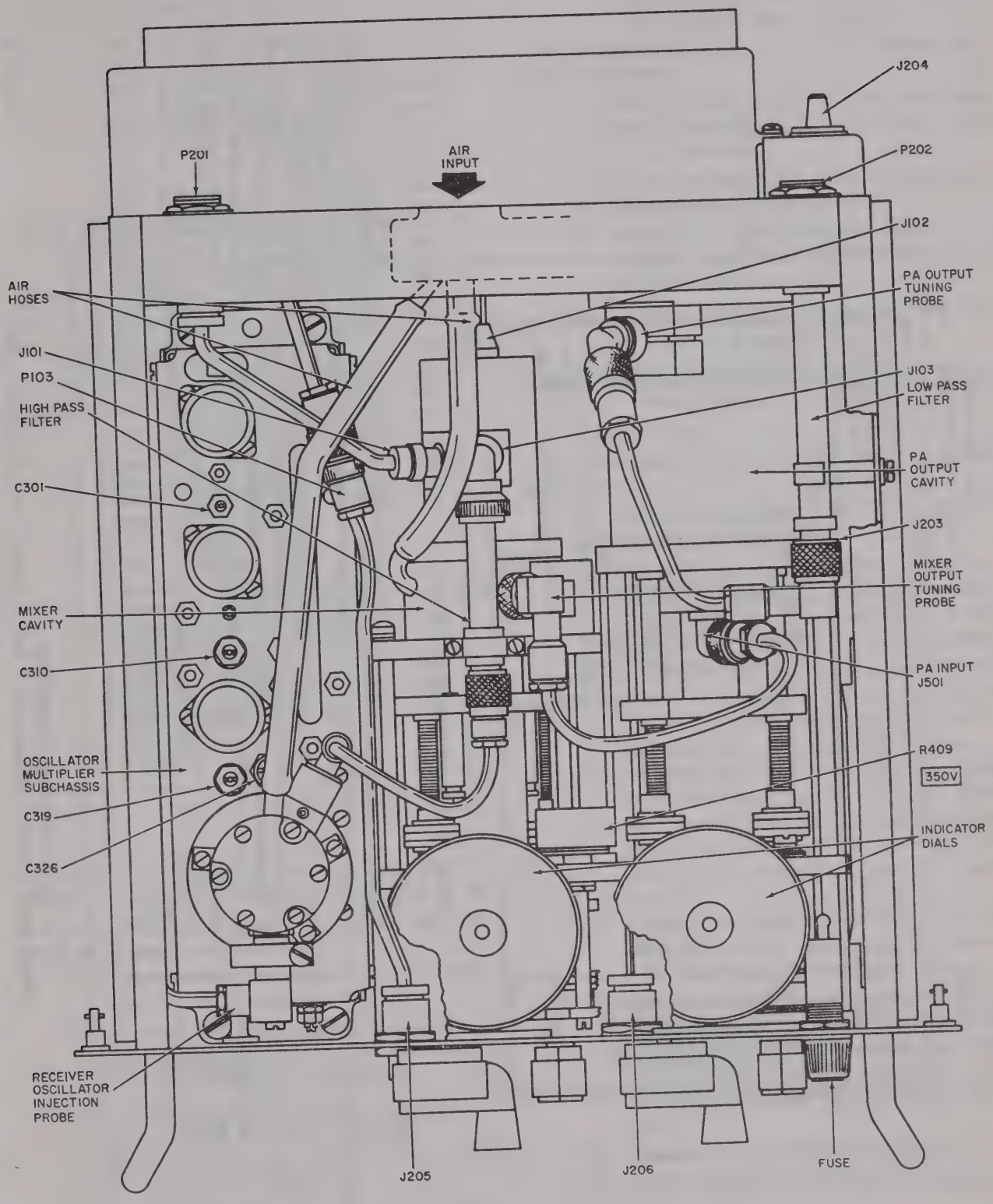

TOP VIEW

Figure 227.3. (Added) *Transmitter F-band RF tuner, top view.*

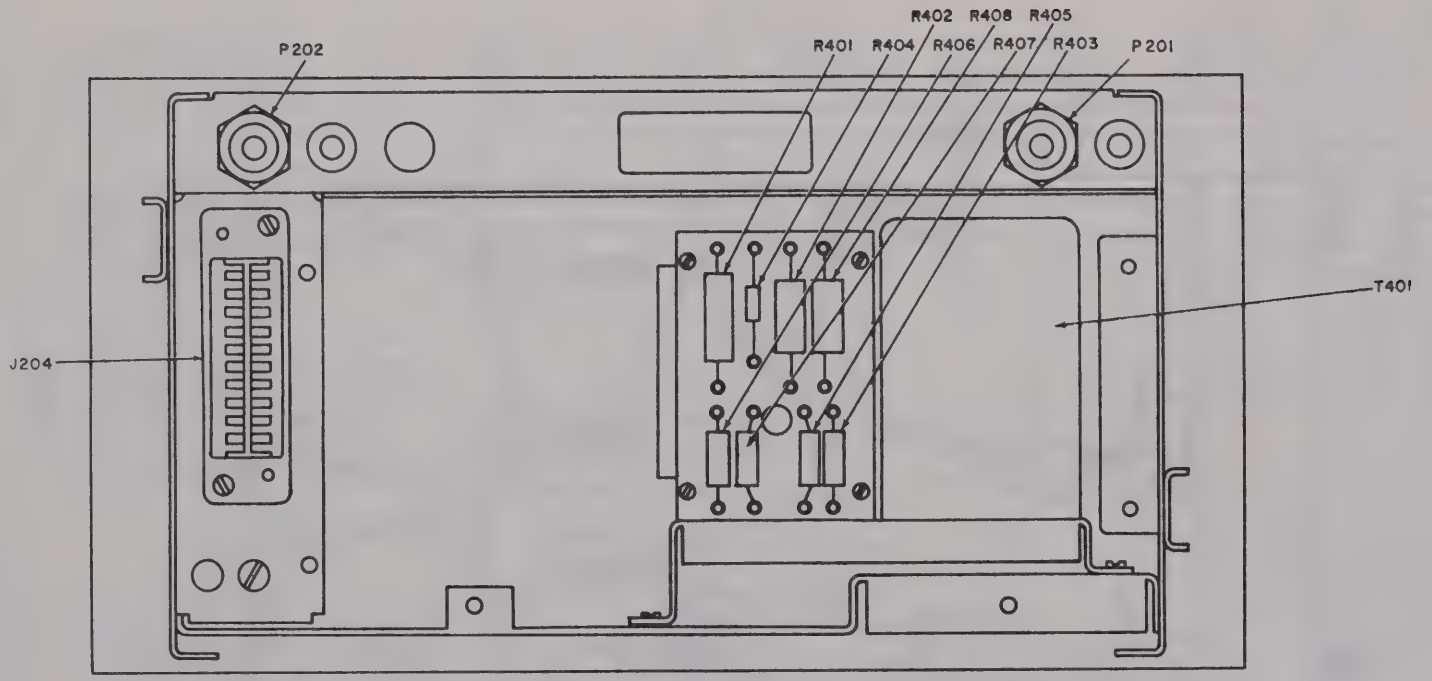

REAR VIEW, BACK COVER REMOVED

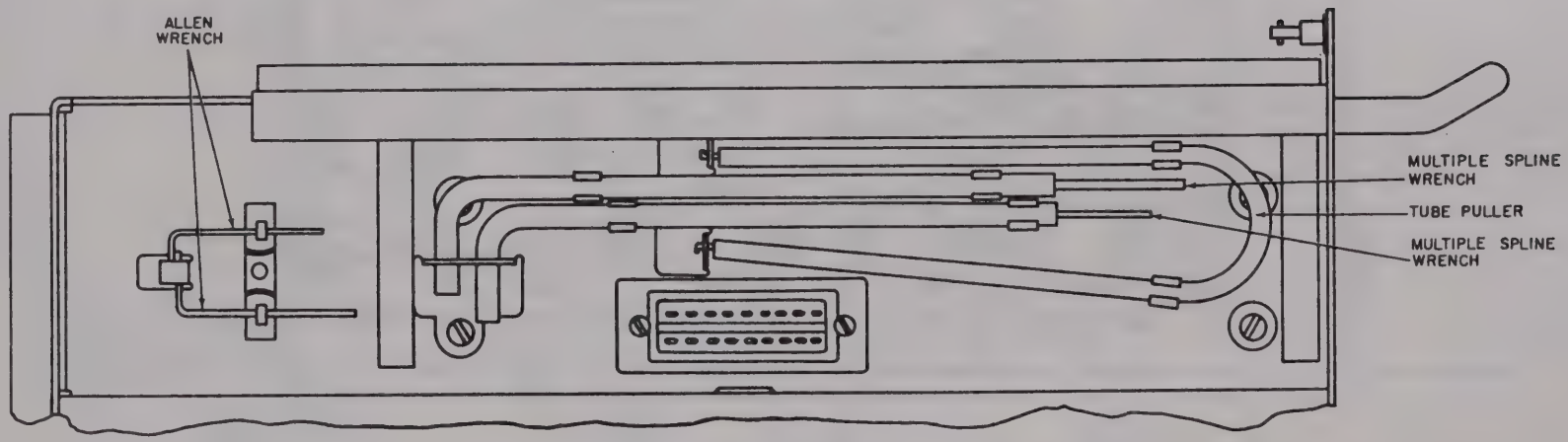

BOTTOM VIEW TURNED 90°

Figure 227.4. (Added) *Transmitter F-band RF tuner, rear and bottom views.*

TM687-C7-24

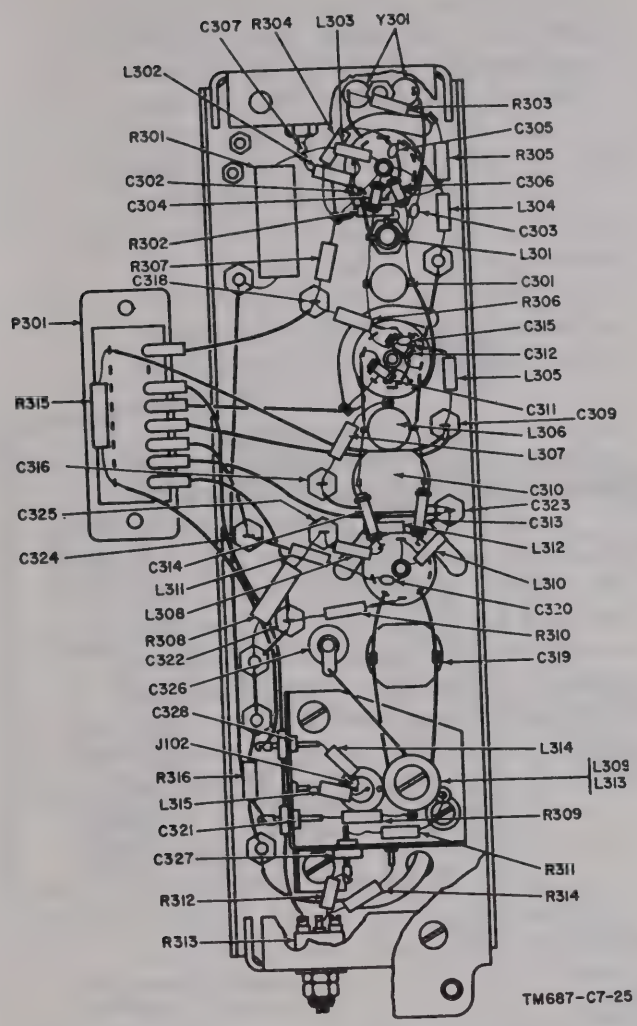

Figure 227.5. (Added) *Oscillator-multiplier, bottom view.*

when the power-supply chassis has been removed from the transmitter F-band RF tuner.

a. To remove the power-supply chassis, proceed as follows:

(1) Remove the back cover (1) by loosening the six captive screws (2).

(2) Remove the four screws (4) that hold the power-supply chassis (3) to the transmitter F-band RF tuner.

(3) Remove the taper pins (6) from the terminal board as follows:

(*a*) Slide back the individual pieces of insulated tubing.

(*b*) Use long-nose pliers to grasp each pin by the neck, and pull the pin straight out.

Note. Tag pins to insure that they will be replaced in the holes from which they were removed.

b. To replace the power-supply chassis, proceed as follows:

(1) Insert taper pins in the terminal board, each pin in the hole from which it was removed.

(2) Slide the individual piece of insulated tubing over each taper pin.

(3) Secure the power-supply chassis (3) to the transmitter F-band RF tuner with the four screws (4).

(4) Replace the back cover (1); use the six captive screws (2).

339.5. Removal and Replacement of Gear-Drive Chain

(fig. 263.4)

a. To remove the gear-drive chain, proceed as follows:

(1) Remove the cable clamp (1) by removing the screw (2).

(2) Remove the four screws (3), two located under each carrying handle, that secure the front panel (4) to the transmitter F-band RF tuner frame.

(3) Note the position of all knobs. Use the appropriate Allen wrench to loosen the setscrews in the four control knobs (5) and (6), and remove all knobs.

(4) Remove the five screws (7) that hold the front panel (4) to the front plate (8) of the gear-drive assembly. Swing the front panel out of the way. Be careful not to damage the fuse wire cable.

(5) Loosen the locknuts on the eccentric idler gears (9) and turn the screw until the chain is completely slack.

(6) Remove the four post screws (10) that hold the gear-drive-assembly front plate (8) in place, and carefully pull the front plate straight out. The idler gears come off with the front plate.

(7) Remove the gear-drive chain (11).

b. To replace the gear-drive chain, proceed as follows:

(1) Place the gear-drive chain (11) around the drive gears (13). It should be slack.

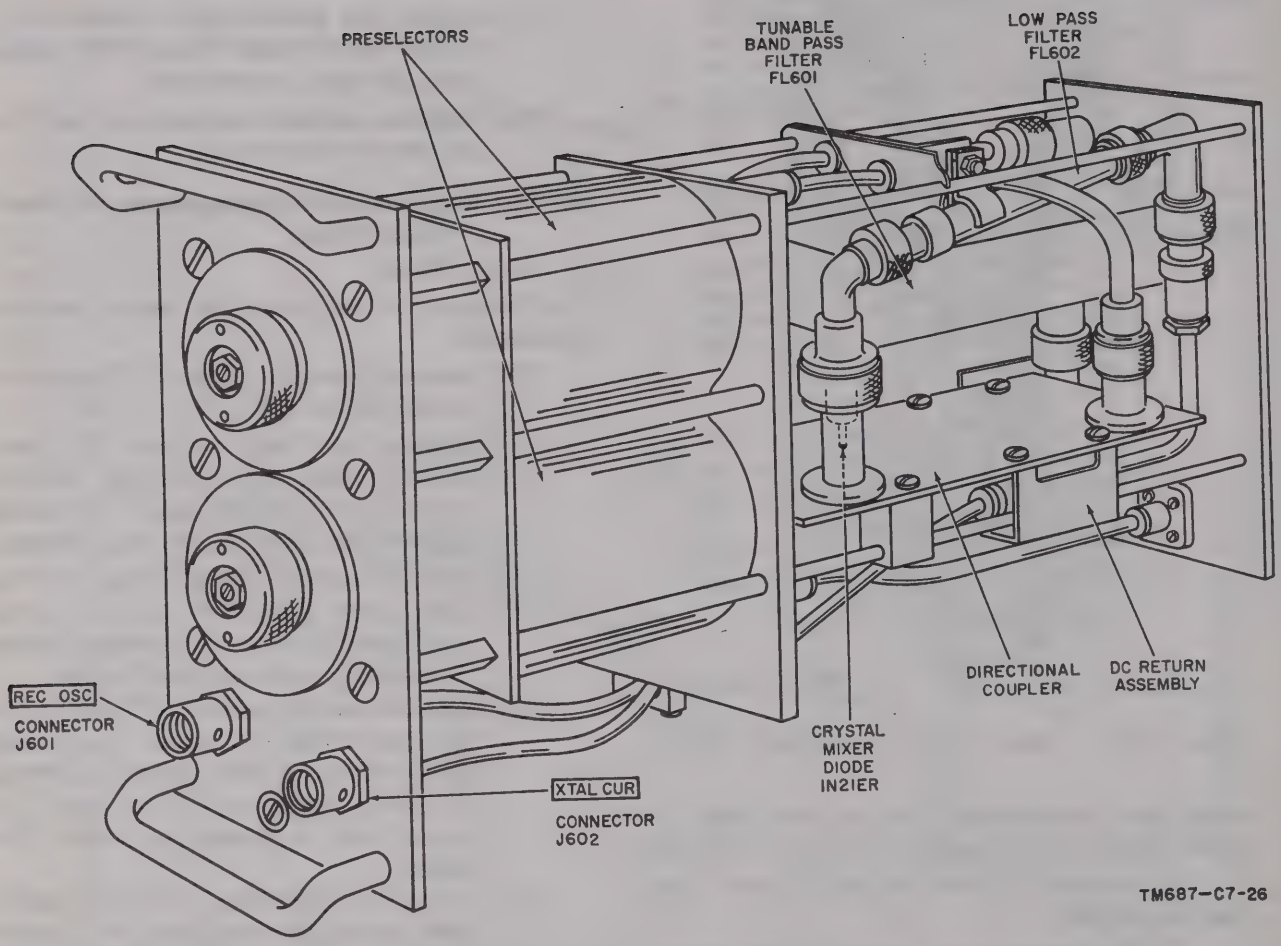

Figure 248.4. (Added) ***F-band frequency mixer, side view.***

(2) Carefully replace the gear-drive-assembly front plate (8). The shaft holes on the front and rear plates are bored in line. Be sure that the shafts do not bind.

(3) Replace the post screws (10), but do not tighten them completely.

(4) Rotate all five shafts to be sure that none of them bind. If binding occurs, shift the front plate (8) slightly until all shafts turn freely; then tighten the post screws (10) and recheck the shaft movement.

(5) Replace the slack portion of the chain on the eccentric idler gears (9) and move the gears outward until the chain is held firmly in place.

(6) Adjust the position of each eccentric idler gear (9), while holding the driven shaft (12) in a fixed position. Apply a 20-ounces-per-inch torque to the drive gear (13). The angular backlash of the drive gear (13) from extreme clockwise to extreme counterclockwise position should be no less than 3° and no more than 7°.

(7) Tighten the screw and the locknuts on the eccentric idler gears (9).

(8) Swing the front panel (4) back into place over the front plate (8) and secure it in place with the five screws (7).

(9) Replace the four control knobs (5 and 6), and secure them in place with the setscrews (one in each knob).

Caution: **Be sure to replace each knob in the position from which it was removed.**

(10) Secure the front panel to the transmitter F-band RF tuner with the screws (3).

(11) Replace the cable clamp (1), and secure it in place with the screw (2).

(12) Calibrate the MIXER TUNE and PA TUNE dials (par. 356.2*d*).

339.6. Removal and Replacement of Output Cavity

(fig. 263.7)

a. Remove the output cavity as follows:

(1) Remove the back cover (1) by loosening the six captive screws (2).

(2) Remove the tube, using the tube puller (fig. 123.3, par. 151.3).

(3) Disconnect the RF cable connectors (7 and 8).

(4) Remove the backplate (10) by removthe screws (9) that secure it to the chassis base and the frame.

(5) Unsolder the two wire connections from the side of the cavity assembly.

(6) Remove the B+ wire from the stud (12) next to the tube socket.

(7) Loosen the setscrews on both couplers (11). Use the multiple spline wrench (fig. 227.4). There are two screws on each coupler.

(8) Remove the screws (13) that hold the base of the cavity to the four mounting posts.

(9) Remove the three screws (14).

(10) Slide the cavity assembly (15) straight out until the couplers are disengaged; then angle the assembly clear of the connector and the chassis.

b. Replace the output cavity as follows:

(1) Slide the cavity assembly (15) into place on the base.

(2) Replace the screws (13), and engage the couplers (11). Tighten the setscrews, two on each coupler.

(3) Resolder the wire connections to the side of the cavity assembly.

(4) Replace the three screws (14).

(5) Replace the B+ wire on the stud (12).

(6) Replace the backplate (10), and secure it in place with the four screws (9)

(7) Reconnect the RF cable connectors (7 and 8).

(8) Replace the tube in the cavity by pressing it firmly into place.

(9) Replace the back cover (1): tighten the six captive screws (2).

(10) Calibrate the PA TUNE dial (par. 356.2*d*).

339.7. Removal and Replacement of Mixer Cavity

(fig. 263.8)

a. Remove the mixer cavity as follows:

(1) Follow the procedures in paragraph 339.4*a*(1) and (2) to remove the back cover and the power supply chassis.

(2) Disconnect the airhose (5).

(3) Remove the cable clamp (6) by removing the two retaining screws (17).
(4) Disconnect the RF cable connectors (7, 8, 9, and 18).
(5) Remove the drum dial (10), using the appropriate multiple spline wrench (fig. 227.4) to loosen the setscrews.
(6) Unsolder the wire from the end of the cavity.
(7) Loosen the couplers (11) by loosening two setscrews in each coupler.
(8) Remove the screws (12) that hold the base of the cavity (13) to the mounting posts.
(9) Remove the cavity from the chassis.

b. To replace the mixer cavity, proceed as follows:

(1) Replace the cavity in the chassis in the position from which it was removed.
(2) Replace the screws (12) that hold the base of the cavity (13) to the mounting posts.
(3) Tighten the coupler (11) setscrews. There are two setscrews in each coupler.
(4) Resolder the wire to end of the cavity.
(5) Replace the drum dial (10). Use a spline wrench to tighten the setscrews.
(6) Use two retaining screws to replace the cable clamp (6).
(7) Reconnect the RF cable connectors (7, 8, 9, and 18).
(8) Reconnect the airhose (5).
(9) Follow the procedures described in paragraph 339.4*b*(2) and (3) to replace the power-supply chassis and the back cover.

339.8. Removal and Replacement of Mixer Output Probe

(fig. 263.8)

a. Remove the mixer output probe as follows:

(1) Loosen the two setscrews on the flexible coupling.
(2) Remove the RF cable connector (7) from the probe (15).
(3) Pull up on the probe (15) and ease it out of its mount.

b. Replace the mixer output probe as follows:

(1) Insert the probe (15) and mesh the drive gears (14 and 16).
(2) Slide the probe in until it bottoms, and adjust the MIXER COUPLING control to the clockwise stop position.
(3) Tighten the setscrews on the flexible coupling.
(4) Replace RF cable connector (7).

Page 404, paragraph 343. Add the following to the chart:

Quantity	Test equipment	Manual
1	Signal Generator AN/URM–49	TM 11–6625–280–15
1	Power Test Set AN/USM–101.	
1	Wattmeter ME–13/U.	
1	Centrifugal blower with a capability of 12 cubic feet per minute.	

Page 405, paragraph 344*c*(4). Add the following note below the chart.

Note. In transmitters procured on Order No. 39906–PP–58, filter FL101 is not supplied and signals up to 108 kc can be passed.

Page 431, paragraph 356.1 (page 95 of C 5). Add paragraph 356.2 after paragraph 356.1.

356.2. Final Test of Transmitter F-Band RF Tuner

a. Oscillator-Multiplier.

(1) Connect the transmitter F-band RF tuner to the T–302/TRC, using Cable Assembly, Special Purpose, Electrical CX–6128/U.
(2) Set the transmitter TEST switch to the MULT CATH position and set the transmitter F-band RF tuner TEST MULT CATH switch to the 1ST TRIP CATH position.
(3) Set the 750V ADJ switch on the PP–685/TRC to position 6.
(4) Set the DC TEST switch on the PP–685/TRC to the 275 LOWER SCALE position.
(5) Set the OSC OUTPUT control on the transmitter F-band RF tuner in the fully clockwise position.
(6) Turn on the 115V AC switch on the PP–685/TRC.

1 Back cover
2 Captive screw
3 Power-supply chassis
4 Screw
5 Terminal board
6 Taper pin
7 RF cable connector
8 RF cable connector
9 Screw
10 Backplate
11 Coupler
12 Stud
13 Screw
14 Screw
15 Cavity assembly

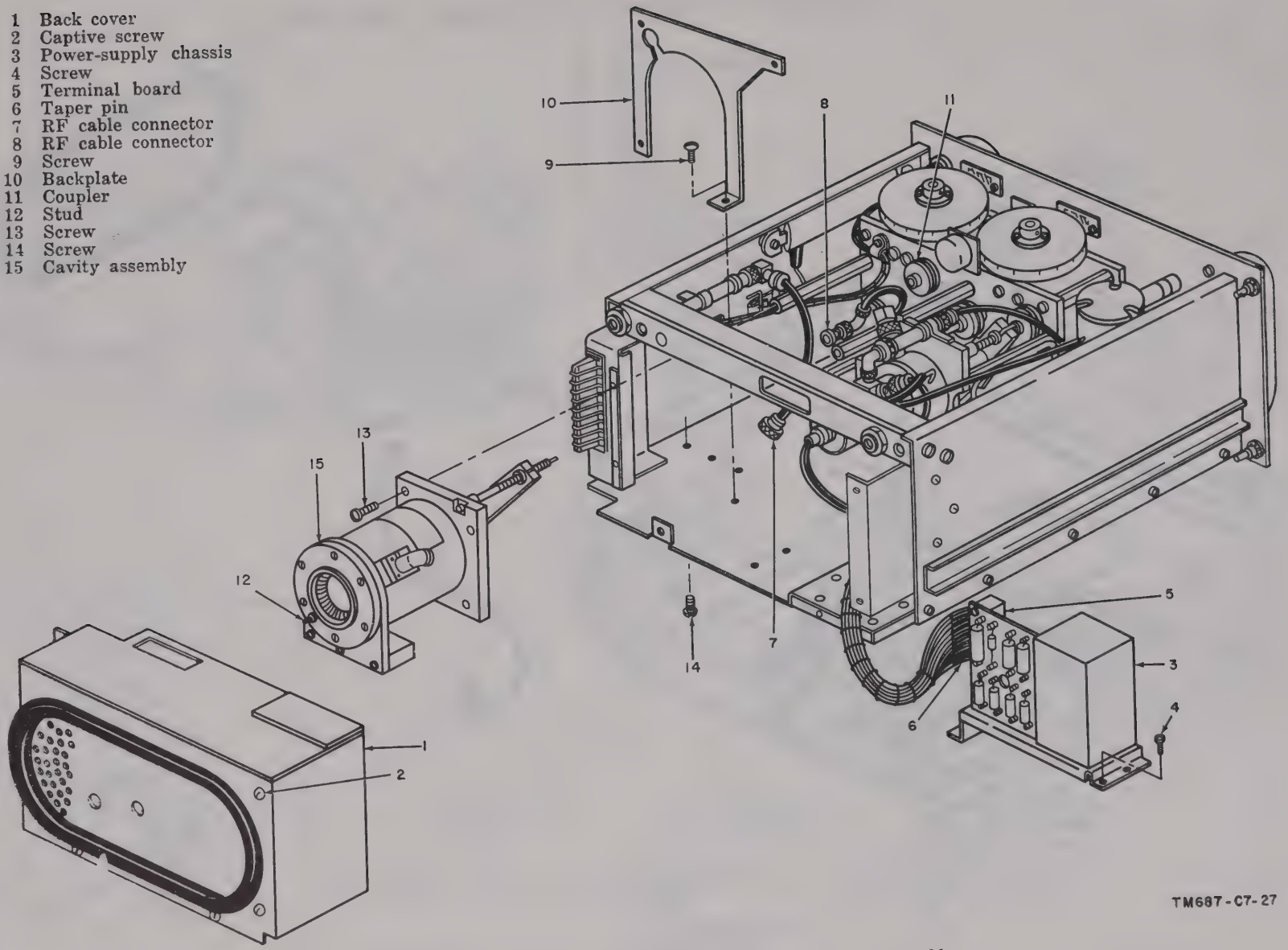

Figure 263.7. (Added) *Transmitter F-band RF tuner, disassembly.*

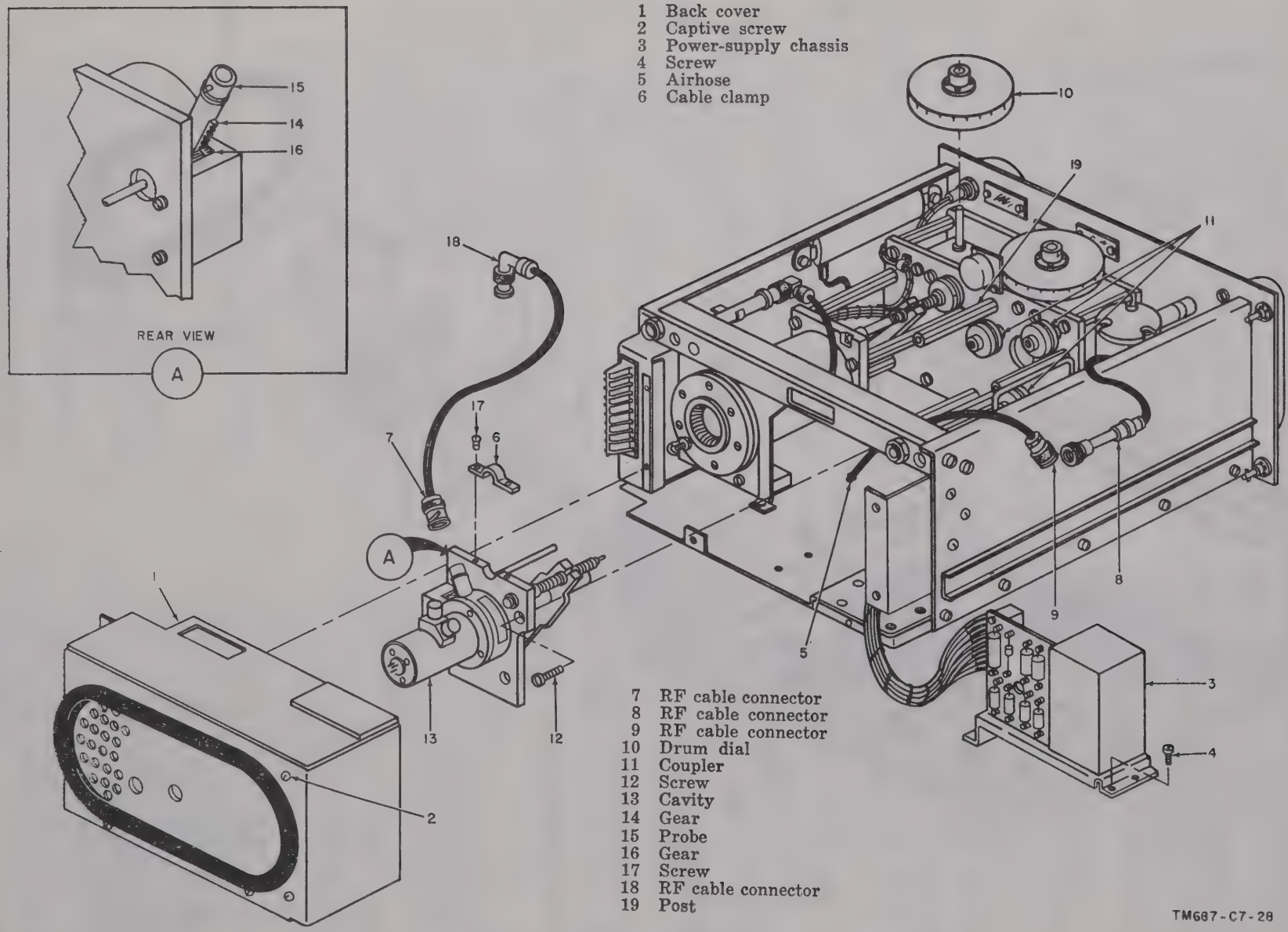

Figure 263.8. (Added) *Transmitter F-band RF tuner, disassembly.*

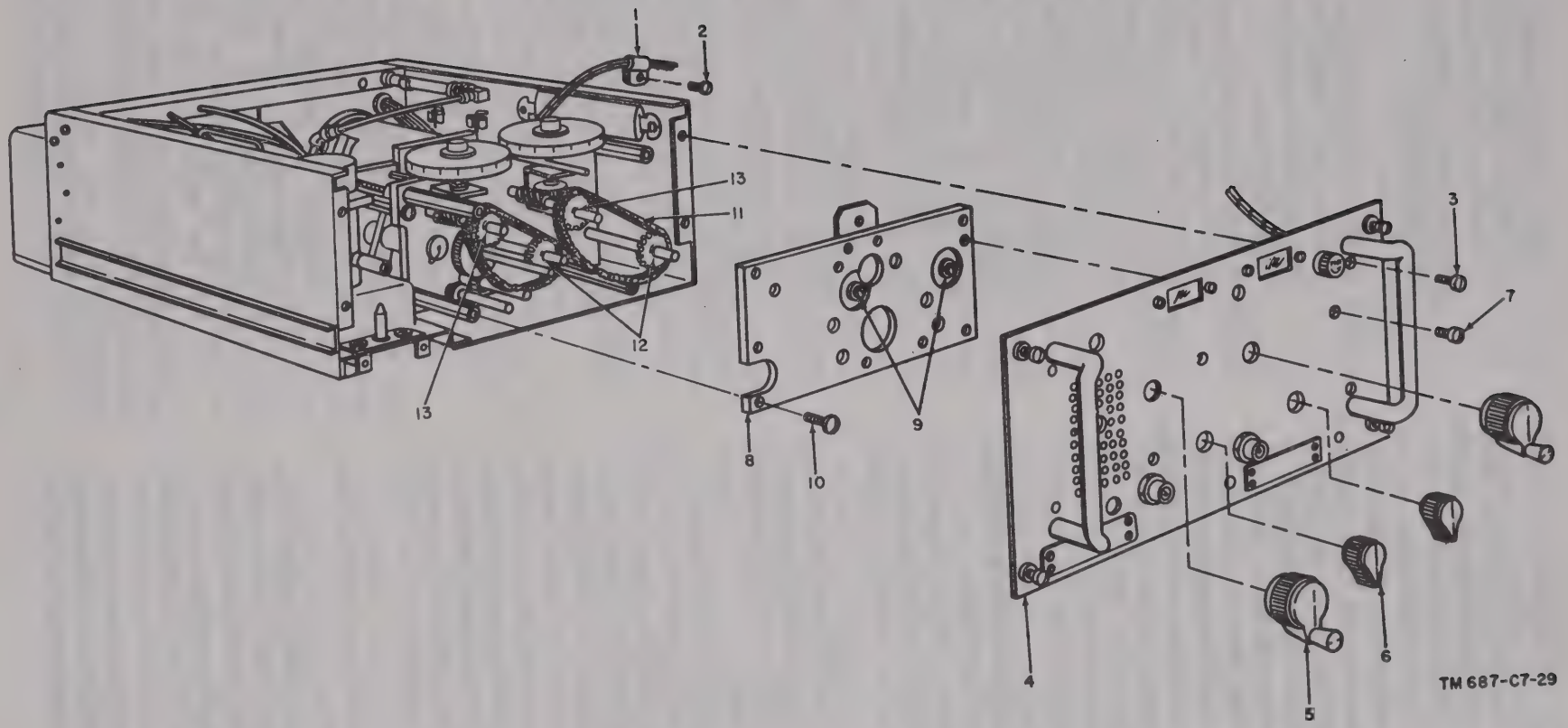

1 Cable clamp
2 Screw
3 Screw
4 Front panel
5 Knob
6 Knob
7 Screw
8 Front plate
9 Idler gear
10 Post screw
11 Gear-drive chain
12 Driven shaft
13 Drive gear

Figure 263.9. (Added) *Transmitter F-band RF tuner, disassembly.*

(7) Turn on the 750V DC switch on the PP–685/TRC.

(8) After the time-delay relay has energized, adjust the 350V control on the transmitter F-band RF tuner for a 350-volt ±10 volts indication on the DC VOLTS meter of the PP–685/TRC.

(9) Use the alinement tool stored behind the front panel of the R–417/TRC to adjust capacitor C301 (fig. 227.3) in the oscillator-multiplier clockwise. While adjusting, observe a maximum reading on the transmitter TEST meter; stop adjusting when a sharp drop in the meter reading is noted.

(10) Turn capacitor C301 two complete turns counterclockwise. The TEST meter should now read at least 13 microamperes.

(11) Set the TEST MULT CATH switch to the DOUB CATH position.

(12) Adjust capacitor C310 in the oscillator-multiplier (fig. 227.3) for a maximum reading on the transmitter TEST meter.

(13) Adjust capacitor C319 and capacitor C326 (fig. 227.3) for a maximum reading on the TEST meter (17 microamperes minimum).

(14) Set the TEST MULT CATH switch to the MIXER CATH position.

(15) Adjust the OSC TUNE control on the transmitter F-band RF tuner for a maximum reading on the TEST meter.

(16) Loosen the setscrew that locks the receiver oscillator injection probe (fig. 227.3) on the doubler cavity. Adjust the OSC TUNE control and the probe (by hand) alternately until a maximum reading is obtained on the TEST meter.

(17) Lock the capacitive probe, using the setscrew provided.

(18) Connect the probe of Wattmeter ME–13/U to the REC OSC jack on the front panel of the transmitter F-band RF tuner. Note the reading.

(19) Adjust the REC OSC INJ control on the front panel of the transmitter F-band RF tuner throughout its range. The readings should vary from a minimum of 10 to a maximum of 60 milliwatts. Set the control for an output of approximately 30 milliwatts.

Caution: **Do not force the control. Do not turn it through more than a one-quarter turn.**

b. Mixer Cavity.

(1) Connect an RF cable from connector J112 on the T–302/TRC to the VHF jack (P201) on the transmitter F-band RF tuner.

(2) Follow the tune-up procedure outlined in paragraphs 98 and 104, and tune the T–302/TRC to channel B120.

(3) Set the TEST switch (T–302/TRC) in the MULT CATH position and the TEST MULT CATH switch in the MIXER CATH position. Adjust the DRIVER TUNE control on the transmitter for a maximum reading on the TEST meter. Adjust the transmitter DRIVER OUTPUT control for a reading of 30 microamperes. Repeak the DRIVER TUNE control.

(4) Disconnect P501 from J501, and connect it to the ME–13/U.

(5) Set the MIXER COUPLING control on the transmitter F-band RF tuner to position 4.

(6) Set the MIXER TUNE control on the transmitter F-band RF tuner to channel 120 on the F_{hi} band (orange dial).

(7) Adjust the MIXER TUNE and the MIXER COUPLING controls for a maximum reading (1.5 watts minimum) on the ME–13/U.

c. Final Test Procedure.

(1) Reconnect P501 to J501.

(2) Replace the CX–6128/U with an adapter cable that has wires connected to pins 10 and 11, as well as those that were connected on the CX–6128/U.

Caution: **To prevent burn-out of the final amplifier, always connect a centrifugal blower (at least 12 cubic feet per minute of air) so that it blows over the anode assembly of the tube.**

(3) Loosen the screw that secures the capacitive probe on the final amplifier cavity.

(4) Adjust the capacitive probe so that the flat portion of the probe extends three-

eighths inch beyond the clamp. Hold the probe while retightening the screw.

(5) Connect an RF cable between the output of UHF filter FL–201 and the ME–82/U.

(6) Turn on the 115V AC switch on the PP–685/TRC.

(7) Turn on the 150V DC switch.

(8) Turn on the 750V DC switch.

(9) Repeat the procedures in *b*(3) through (8) above.

(10) Set the TEST MULT CATH switch on the transmitter F-band RF tuner to the PA CATH position.

(11) Tune the MIXER COUPLING control slowly until there is a slight increase in the reading on the transmitter TEST meter. If no increase is noted, return the MIXER COUPLING control to position 4, and retune the MIXER TUNE control for an increase.

(12) Tune the PA TUNE control for a maximum power indication on the ME–82/U.

(13) Loosen the capacitive probe in the final amplifier cavity, and adjust its position for a maximum power indication on the ME–82/U while performing (12) above.

(14) Lock the capacitive probe in position with the screw provided.

(15) Readjust the MIXER TUNE and MIXER COUPLING controls for a maximum power indication (12 watts minimum) on the ME–82/U.

d. Dial Calibration.

(1) Loosen the setscrews that hold the MIXER TUNE and PA TUNE dials (inside windows above MIXER TUNE and PA TUNE control knobs) in place, and position the dials so that "120" on the orange band lines up with the hairline on each window. Lock the setscrews.

(2) Turn off all power, and remove all test equipment. Reconnect any cables that were removed from the transmitter F-band RF tuner, and replace it in the T–302/TRC.

Page 442, paragraph 362.1 (page 105 of C 5). Add paragraph 362.2 after paragraph 362.1.

362.2. Final Test of Receiver F-Band RF Tuner (CV–932/TRA–25 With AM–913/TRC)

a. Install the transmitter F-band RF tuner in the T–302/TRC, and set up the transmitter for normal F-band operation (par. 91–108).

b. Connect Wattmeter ME–82/U to the ANTENNA connector of the T–302/TRC.

c. Install the CV–932/TRA–25 and the AM–913/TRC in the R–147/TRC, and make the cable connections shown in figure 85.1.

d. Connect the output of Signal Generator AN/URM–49 to the ANTENNA connector of the R–417/TRC.

e. Connect a 600-ohm resistor across the REC terminals (fig. 93) of the R–417/TRC, and connect the TS–505/U across the resistor.

f. Turn on the transmitter, and tune it up (para. 105*b*.2).

g. Turn off the 150V DC switch on the PP–685/TRC.

h. Set the transmitter TEST switch to the MULT CATH position.

i. Set the TEST MULT CATH switch (transmitter F-band RF tuner) to the XTAL CUR position.

j. Remove the CV–932/TRA–25 from the R–417/TRC, *bul leave all cables connected.*

k. Adjust the LO FIL TUN control on the rear of the CV–932/TRA–25 for a maximum reading on the transmitter TEST meter but do not permit the meter indication to go above 20 microamperes. If the meter tends to peak above 20 microamperes, turn the REC OSC INJ control (transmitter F-band RF tuner) counterclockwise to decrease the reading to the proper value.

l. Replace the CV–932/TRA–25 in the R–417/TRC.

m. Set the CV–932/TRA–25 antenna and mixer HIGH-LOW dials for channel 120, and set the MIXER TUNE and PA TUNE controls (transmitter F-band RF tuner) for channel 120 on the appropriate dial scale: orange if O–735/TRA–25 (high band) is used, green if O–734/TRA–25 (low band)is used.

n. Adjust the REC OSC INJ control for 10 microamperes on the transmitter TEST meter.

o. Turn off the AN/URM–49, and take a

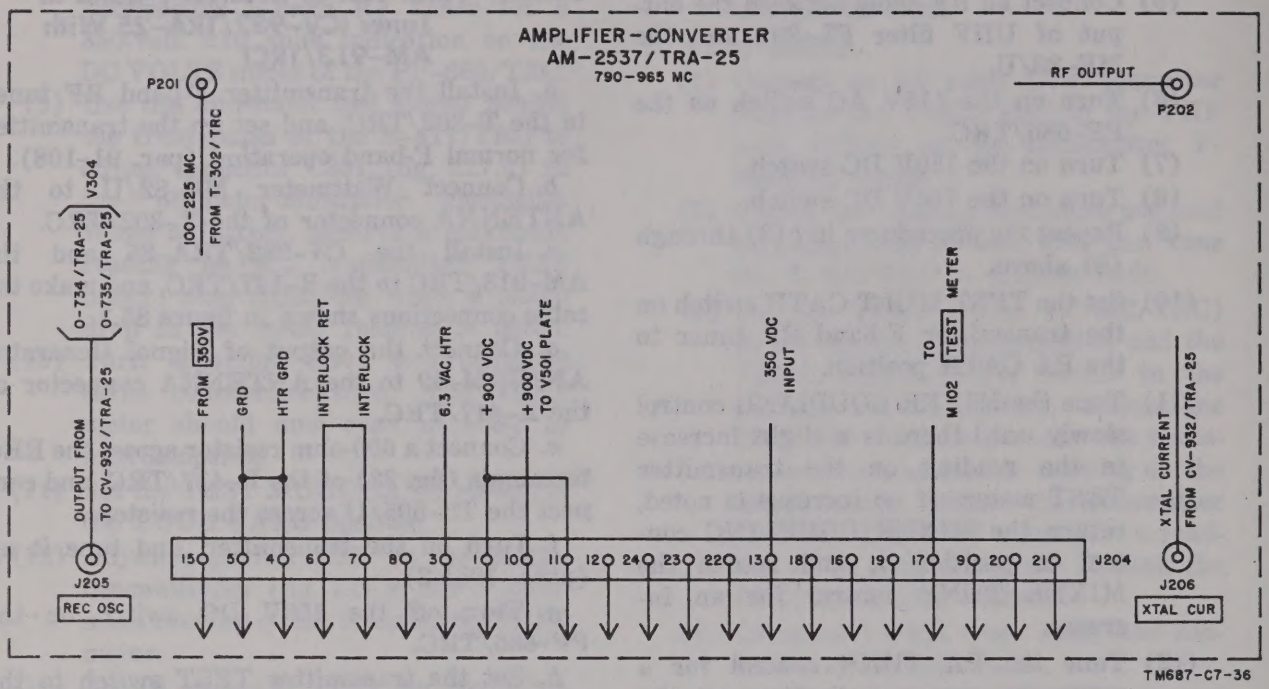

Figure 268.2. (Added) *Transmitter F-band RF tuner.*

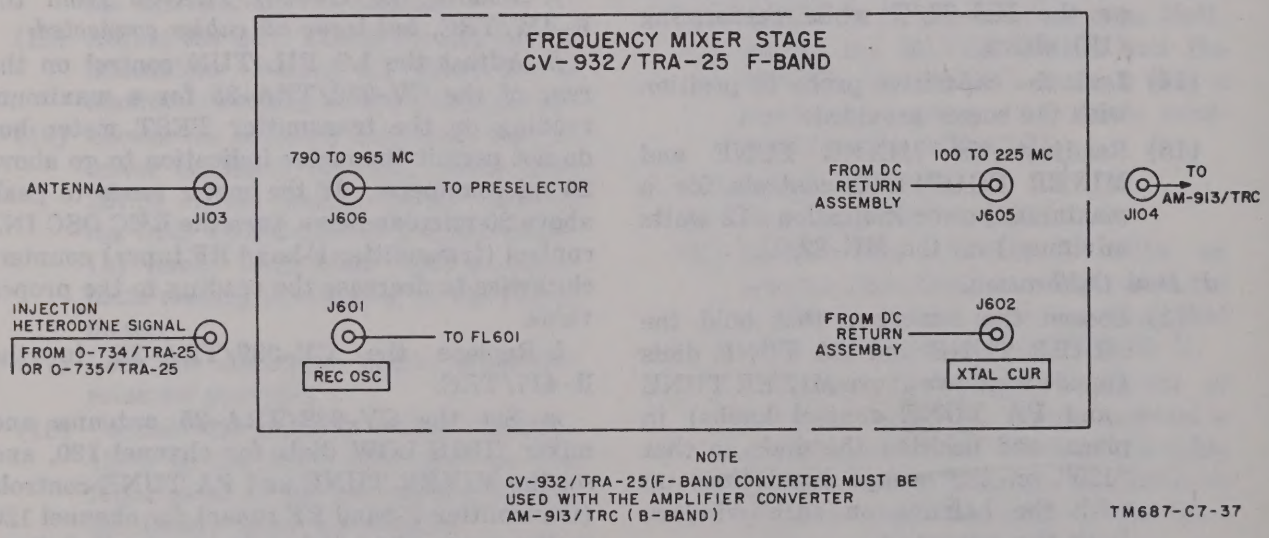

Figure 276.1. (Added) *F-band frequency mixer.*

noise reading on the TS–505/U. Record this reading.

p. Turn on the AN/URM–49, and adjust the output for 150 microvolts.

d. Set the AM–913/TRC RF AMP control for channel B120, and then set the receiver AFC-OFF-CAL switch to OFF.

r. Set the R–417/TRC MEASURE switch to the 2ND LIM position.

s. Adjust the AN/URM–49 tuning until a center-scale indication is observed on the receiver FREQ DRIFT meter and a maximum indication is observed on the MEASURE meter.

t. Set the receiver AFC-OFF-CAL switch to the AFC position.

u. Adjust the antenna and mixer HIGH-LOW dials (CV–932/TRA–25) for a maximum reading on the TS–505/U.

v. Decrease the attenuator setting of the AN/URM–49 until the reading observed on the TS–505/U is one-tenth the reading observed in *o* above. The AN/URM–49 should read —115 db or lower.

w. Disconnect all test equipment and the 600-ohm resistor.

Page 458, figure 268 (contained in separate envelope) (page 107 of C 5). Make the following changes:

Add to NOTE 5:

THE SWITCH IS ALSO OPEN FOR AMPLIFIER-CONVERTER AM–2537/TRA–25.

Add to NOTE 7:

NO BAND-PASS FILTERS ARE USED WITH THE TRANSMITTER F-BAND RF TUNER. THE DUMMY FILTER IS USED.

Add note 22 after note 21:

22. IN TRANSMITTERS PROCURED ON ORDER NO. 39906–PP–58, FILTER FL101 IS NOT SUPPLIED. TERMINAL 7 OF T101 IS CONNECTED TO THE "30" END OF R101.

Add the block in figure 268.2 above the "AMPLIFIER RADIO FREQUENCY AM–912/TRC" block in the center of the figure.

Figure 276 (contained in separate envelope). Make the following changes: Add to NOTE 3:

FOR F-BAND OPERATION, MIXER STAGE, FREQUENCY CV–932/TRA–25 IS USED WITH THE B-BAND TUNER IN PLACE OF THE BAND-PASS FILTER. A BAND-PASS FILTER IS INCLUDED IN THE CV–932/TRA–25.

Add the block in figure 276.1 over the "DUMMY FILTER" block in the upper left-hand corner of figure 276.